Refrigerant R410A
INVERTER

AIRSTAGE™ V SERIES

Variable Refrigerant Flow System

DESIGN & TECHNICAL DATA

FUJITSU GENERAL LIMITED

CONTENTS

1. GENERAL INFORMATION

1-1. FEATURES OF SYSTEM ····· 01 - 01
1-1-1. HIGH RELIABILITY ····· 01 - 01
1-1-2. IMPROVED COMFORT ····· 01 - 02
1-1-3. HIGH EFFICIENCY OPERATION ····· 01 - 03
1-1-4. DESIGN FREEDOM ····· 01 - 04
1-1-5. EASY INSTALLATION ····· 01 - 05
1-2. MODEL LINE UP ····· 01 - 07

2. MODEL SELECTION

2-1. MODEL SELECTION PROCEDURE ····· 02 - 01
2-2. MODEL LINE UP ····· 02 - 02
2-2-1. MODEL LINE UP (OUTDOOR UNIT) ····· 02 - 02
2-2-2. MODEL LINE UP (INDOOR UNIT) ····· 02 - 04
2-2-3. MODEL LINE UP (OPTIONAL PARTS) ····· 02 - 05
2-3. MODEL SELECTION AND CAPACITY CALCULATION ····· 02 - 06
2-3-1. SELECTION PROCEDURE OF INDOOR UNIT AND OUTDOOR UNIT ····· 02 - 06
2-3-2. METHOD OF CAPACITY CALCULATION ····· 02 - 07
2-3-3. THE EXAMPLE OF CALCULATION ····· 02 - 08
2-4. CAPACITY TABLE (OUTDOOR UNIT) ····· 02 - 11
2-4-1. COOLING CAPACITY ····· 02 - 11
2-4-2. HEATING CAPACITY ····· 02 - 43
2-5. CAPACITY COMPENSATION COEFFICIENT ····· 02 - 75
2-6. CAPACITY TABLE COOLING (INDOOR UNIT) ····· 02 - 76
2-6-1. COMPACT CASSETTE TYPE ····· 02 - 76
2-6-2. CASSETTE TYPE ····· 02 - 78
2-6-3. COMPACT DUCT TYPE ····· 02 - 80
2-6-4. LOW STATIC PRESSURE DUCT TYPE ····· 02 - 82
2-6-5. DUCT TYPE ····· 02 - 83
2-6-6. HIGH STATIC PRESSURE DUCT TYPE ····· 02 - 84
2-6-7. FLOOR / CEILING TYPE ····· 02 - 85
2-6-8. CEILING TYPE ····· 02 - 86
2-6-9. COMPACT WALL MOUNTED TYPE (Comfort model) ····· 02 - 87
2-6-10. WALL MOUNTED TYPE ····· 02 - 88
2-6-11. CEILING WALL TYPE ····· 02 - 89

CONTENTS

2. MODEL SELECTION

2-7. CAPACITY TABLE HEATING (INDOOR UNIT) ····· 02 - 91
2-7-1. COMPACT CASSETTE TYPE ····· 02 - 91
2-7-2. CASSETTE TYPE ····· 02 - 93
2-7-3. COMPACT DUCT TYPE ····· 02 - 95
2-7-4. LOW STATIC PRESSURE DUCT TYPE ····· 02 - 97
2-7-5. DUCT TYPE ····· 02 - 98
2-7-6. HIGH STATIC PRESSURE DUCT TYPE ····· 02 - 99
2-7-7. FLOOR / CEILING TYPE ····· 02 - 100
2-7-8. CEILING TYPE ····· 02 - 101
2-7-9. COMPACT WALL MOUNTED TYPE (Comfort model) ····· 02 - 102
2-7-10. WALL MOUNTED TYPE ····· 02 - 103
2-7-11. CEILING WALL TYPE ····· 02 - 104

3. OUTDOOR UNITS

3-1. MODEL LINE UP ····· 03 - 01
3-2. SPECIFICATIONS ····· 03 - 03
3-3. DIMENSIONS ····· 03 - 09
3-4. INSTALLATION SPACE ····· 03 - 11
3-5. REFRIGERANT CIRCUIT ····· 03 - 19
3-6. WIRING DIAGRAM ····· 03 - 23
3-7. OPERATION RANGE ····· 03 - 27
3-8. SOUND LEVEL ····· 03 - 28
3-9. ELECTRIC CHARACTERISTICS ····· 03 - 31
3-10. SAFETY DEVICES ····· 03 - 33

4. INDOOR UNITS

4-1. MODEL LINE UP ····· 04 - 01
4-2. FEATURES ····· 04 - 03
4-2-1. COMPACT CASSETTE TYPE ····· 04 - 03
4-2-2. CASSETTE TYPE ····· 04 - 04
4-2-3. COMPACT DUCT TYPE ····· 04 - 05
4-2-4. LOW STATIC PRESSURE DUCT TYPE ····· 04 - 06
4-2-5. DUCT TYPE ····· 04 - 06
4-2-6. HIGH STATIC PRESSURE DUCT TYPE ····· 04 - 07
4-2-7. FLOOR / CEILING TYPE ····· 04 - 08
4-2-8. CEILING TYPE ····· 04 - 09
4-2-9. COMPACT WALL MOUNTED TYPE (Comfort model) ····· 04 - 10
4-2-10. WALL MOUNTED TYPE ····· 04 - 11
4-2-11. CEILING WALL TYPE ····· 04 - 12

CONTENTS

4. INDOOR UNITS

4-3. SPECIFICATIONS ..... 04 - 13
4-3-1. COMPACT CASSETTE TYPE ..... 04 - 13
4-3-2. CASSETTE TYPE ..... 04 - 14
4-3-3. COMPACT DUCT TYPE ..... 04 - 16
4-3-4. LOW STATIC PRESSURE DUCT TYPE ..... 04 - 17
4-3-5. DUCT TYPE ..... 04 - 18
4-3-6. HIGH STATIC PRESSURE DUCT TYPE ..... 04 - 19
4-3-7. FLOOR / CEILING TYPE ..... 04 - 20
4-3-8. CEILING TYPE ..... 04 - 21
4-3-9. COMPACT WALL MOUNTED TYPE (Comfort model) ..... 04 - 22
4-3-10. WALL MOUNTED TYPE ..... 04 - 23
4-3-11. CEILING WALL TYPE ..... 04 - 24
4-4. ELECTRIC CHARACTERISTICS ..... 04 - 25
4-5. DIMENSIONS ..... 04 - 26
4-5-1. COMPACT CASSETTE TYPE ..... 04 - 26
4-5-2. CASSETTE TYPE ..... 04 - 27
4-5-3. COMPACT DUCT TYPE ..... 04 - 29
4-5-4. LOW STATIC PRESSURE DUCT TYPE ..... 04 - 33
4-5-5. DUCT TYPE ..... 04 - 33
4-5-6. HIGH STATIC PRESSURE DUCT TYPE ..... 04 - 35
4-5-7. FLOOR / CEILING TYPE ..... 04 - 37
4-5-8. CEILING TYPE ..... 04 - 38
4-5-9. COMPACT WALL MOUNTED TYPE (Comfort model) ..... 04 - 39
4-5-10. WALL MOUNTED TYPE ..... 04 - 40
4-5-11. CEILING WALL TYPE ..... 04 - 41
4-6. WIRING DIAGRAMS ..... 04 - 42
4-6-1. COMPACT CASSETTE TYPE ..... 04 - 42
4-6-2. CASSETTE TYPE ..... 04 - 43
4-6-3. COMPACT DUCT TYPE ..... 04 - 45
4-6-4. LOW STATIC PRESSURE DUCT TYPE ..... 04 - 46
4-6-5. DUCT TYPE ..... 04 - 47
4-6-6. HIGH STATIC PRESSURE DUCT TYPE ..... 04 - 48
4-6-7. FLOOR / CEILING TYPE ..... 04 - 50
4-6-8. CEILING TYPE ..... 04 - 51
4-6-9. COMPACT WALL MOUNTED TYPE (Comfort model) ..... 04 - 52
4-6-10. WALL MOUNTED TYPE ..... 04 - 53
4-6-11. CEILING WALL TYPE ..... 04 - 54

CONTENTS

4. INDOOR UNITS

4-7. AIR VELOCITY DISTRIBUTION ····· 04 - 55
4-7-1. COMPACT CASSETTE TYPE ····· 04 - 55
4-7-2. CASSETTE TYPE ····· 04 - 58
4-7-3. FLOOR / CEILING TYPE ····· 04 - 64
4-7-4. CEILING TYPE ····· 04 - 70
4-7-5. COMPACT WALL MOUNTED TYPE (Comfort model) ····· 04 - 74
4-7-6. WALL MOUNTED TYPE ····· 04 - 77
4-7-7. CEILING WALL TYPE ····· 04 - 80
4-8. FAN PERFORMANCE CURVE ····· 04 - 87
4-8-1. COMPACT DUCT TYPE ····· 04 - 87
4-8-2. LOW STATIC PRESSURE DUCT TYPE ····· 04 - 92
4-8-3. DUCT TYPE ····· 04 - 96
4-8-4. HIGH STATIC PRESSURE DUCT TYPE ····· 04 - 100
4-8-5. COMPACT CASSETTE TYPE (DUCT CONNECTION) ····· 04 - 104
4-8-6. CASSETTE TYPE (DUCT CONNECTION) ····· 04 - 105
4-8-7. CEILING TYPE (FRESH AIR) ····· 04 - 107
4-9. AIR FLOW ····· 04 - 108
4-10. NOISE LEVEL CURVE ····· 04 - 109
4-10-1. COMPACT CASSETTE TYPE ····· 04 - 109
4-10-2. CASSETTE TYPE ····· 04 - 111
4-10-3. COMPACT DUCT TYPE ····· 04 - 113
4-10-4. LOW STATIC PRESSURE DUCT TYPE ····· 04 - 115
4-10-5. DUCT TYPE ····· 04 - 116
4-10-6. HIGH STATIC PRESSURE DUCT TYPE ····· 04 - 117
4-10-7. FLOOR / CEILING TYPE ····· 04 - 118
4-10-8. CEILING TYPE ····· 04 - 119
4-10-9. COMPACT WALL MOUNTED TYPE (Comfort model) ····· 04 - 120
4-10-10. WALL MOUNTED TYPE ····· 04 - 121
4-10-11. CEILING WALL TYPE ····· 04 - 122
4-11. SAFETY DEVICES ····· 04 - 125

CONTENTS

5. CONTROL SYSTEM

5-1. CONTROL SYSTEM ····· 05 - 01
5-1-1. LINE UP OF CONTROLLERS ····· 05 - 01
5-1-2. CONTROL SYSTEM DESIGN ····· 05 - 03
5-1-3. SYSTEM CONFIGURATION EXAMPLES ····· 05 - 04
5-1-4. FEATURES OF CONTROL SYSTEM ····· 05 - 08
5-1-5. WIRING SYSTEM ····· 05 - 09
5-2. CONTROL UNITS ····· 05 - 10
5-2-1. PC CONTROLLER ····· 05 - 11
5-2-2. CENTRAL REMOTE CONTROLLER ····· 05 - 15
5-2-3. GROUP REMOTE CONTROLLER ····· 05 - 19
5-2-4. WIRED REMOTE CONTROLLER ····· 05 - 22
5-2-5. SIMPLE REMOTE CONTROLLER (with MASTER CONTROL) ····· 05 - 25
5-2-6. SIMPLE REMOTE CONTROLLER (without MASTER CONTROL) ····· 05 - 28
5-2-7. WIRELESS REMOTE CONTROLLER ····· 05 - 31
5-2-8. IR RECEIVER UNIT ····· 05 - 34
5-2-9. GROUP CONTROL METHOD ····· 05 - 36
5-2-10. COMPARISON TABLE OF CONTROLLERS ····· 05 - 38
5-3. ADAPTOR / CONVERTOR UNITS ····· 05 - 39
5-3-1. NETWORK CONVERTOR ····· 05 - 40
5-3-2. NETWORK CONVERTOR FOR LONWORKS® ····· 05 - 44
5-3-3. BACnet® GATEWAY ····· 05 - 47
5-3-4. SIGNAL AMPLIFIER ····· 05 - 49
5-3-5. TRANSMISSION ADAPTOR ····· 05 - 51
5-3-6. EXTERNAL SWITCH CONTROLLER ····· 05 - 53
5-4. SERVICE & WEB MONITORING TOOL ····· 05 - 56
5-4-1. SERVICE TOOL ····· 05 - 56
5-4-2. WEB MONITORING TOOL ····· 05 - 60

6. SYSTEM DESIGN

6-1. SYSTEM DESIGN ····· 06 - 01
6-1-1. REFRIGERANT SYSTEM ····· 06 - 01
6-1-2. VRF NETWORK SYSTEM ····· 06 - 05
6-1-3. MOUNTING POSITION ····· 06 - 08
6-2. PIPING DESIGN ····· 06 - 10
6-2-1. IMPORTANT ITEMS WHEN USING NEW REFRIGERANT (R410A) ····· 06 - 10
6-2-2. LIMITATIONS ····· 06 - 12
6-2-3. PIPE SIZE ····· 06 - 16
6-2-4. SELECTION OF PIPE HEAT INSULATING MATERIAL ····· 06 - 19
6-2-5. ADDITIONAL CHARGE CALCULATION ····· 06 - 20
6-2-6. EXAMPLE OF PIPING DESIGN ····· 06 - 21

CONTENTS

6. SYSTEM DESIGN

6-3. PIPING CONNECTION ····· 06 - 27
6-3-1. CAUTION OF PIPING ····· 06 - 27
6-3-2. PIPING TO OUTDOOR UNIT ····· 06 - 29
6-3-3. SEPARATION TUBE ····· 06 - 35
6-3-4. HEADER ····· 06 - 37
6-3-5. EV KIT ····· 06 - 39
6-4. WIRING DESIGN ····· 06 - 43
6-4-1. ELECTRICAL WIRING ····· 06 - 43
6-4-2. POWER SUPPLY CABLE WIRING ····· 06 - 44
6-4-3. TRANSMISSION LINE ····· 06 - 46
6-4-4. CONTROLLER CABLE WIRING ····· 06 - 50
6-5. SYSTEM SETTING ····· 06 - 51
6-5-1. SYSTEM TYPE SETTING ····· 06 - 51
6-5-2. ADDRESS SETTING ····· 06 - 53
6-5-3. MANUAL ADDRESS SETTING METHOD ····· 06 - 55
6-5-4. INFRARED ADDRESS SETTING ····· 06 - 66
6-6. FUNCTION SETTING ····· 06 - 73
6-6-1. OUTDOOR UNIT ····· 06 - 73
6-6-2. INDOOR UNIT ····· 06 - 78
6-6-3. INDOOR UNIT (COMPACT WALL MOUNTED Comfort model) ····· 06 - 83
6-6-4. WIRED, SIMPLE REMOTE CONTROLLER ····· 06 - 87
6-6-5. GROUP REMOTE CONTROLLER ····· 06 - 90
6-6-6. CENTRAL REMOTE CONTROLLER ····· 06 - 91
6-6-7. DUCT STATIC PRESSURE SETTING ····· 06 - 94
6-7. EXTERNAL INPUT & OUTPUT ····· 06 - 96
6-7-1. OUTDOOR UNIT ····· 06 - 96
6-7-2. INDOOR UNIT ····· 06 - 97
6-7-3. INDOOR UNIT (COMPACT WALL MOUNTED Comfort model) ····· 06 - 99
6-7-4. CENTRAL REMOTE CONTROLLER / PC CONTROLLER ····· 06 - 101
6-8. DRAIN CONNECTION ····· 06 - 103
6-8-1. OUTDOOR UNIT ····· 06 - 103
6-8-2. INDOOR UNIT ····· 06 - 104
6-8-3. DRAIN PUMP UNIT ····· 06 - 111
6-9. STANDARD ACCESSORIES ····· 06 - 118
6-9-1. OUTDOOR UNIT ····· 06 - 118
6-9-2. INDOOR UNIT ····· 06 - 119
6-10. REFRIGERANT LEALAGE CAUTION ····· 06 - 125
6-10-1. INTRODUCTION ····· 06 - 125
6-10-2. CHECKING CONCENTRATION LIMIT ····· 06 - 126
6-11. COMPATIBILITY OF VRF SYSTEM ····· 06 - 128

CONTENTS

7. OPTIONAL PARTS

7-1. SEPARATION TUBE ····· 07 - 01
7-2. OUTDOOR UNIT BRANCH KIT ····· 07 - 05
7-3. HEADER ····· 07 - 06
7-4. EV KIT ····· 07 - 11
7-5. CONTROLLER ····· 07 - 12
7-6. ADAPTOR / CONVERTOR ····· 07 - 13
7-7. OTHERS ····· 07 - 14

Refrigerant R410A
INVERTER

AIRSTAGE™
V SERIES

1 . GENERAL INFORMATION

GENERAL INFORMATION

1-1. FEATURES OF SYSTEM

1-1-1. HIGH RELIABILITY

■COMPRESSOR ROTATION CONTROL

● Improvement of long life by reducing compressor wear

In addition to control which reduces the number of times the compressor is started and stopped, the load at starting is shared and equalized by rotation control. This rotation improves the durability and reliability of each compressor.

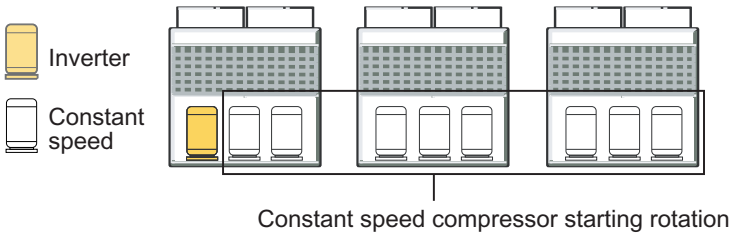

■EMERGENCY OPERATION

● Outdoor unit

Continuous operation is possible even in the unlikely event of compressor failure

There is no immediate system shutdown if trouble occurs in any compressor. The other compressors continue to operate on an emergency basis.

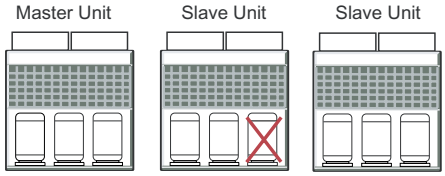

● Indoor unit

Continuous operation is possible even if trouble occurs at any indoor unit(s)

Each indoor unit is controlled individually on the system network. This allows all indoor units continue to run unaffected even if trouble should occur at any indoor unit(s) in one system.

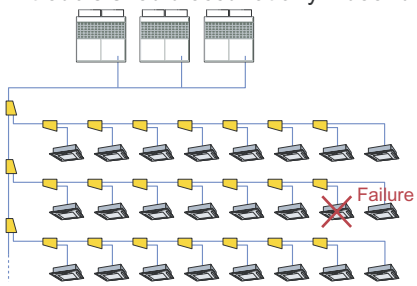

■OPTIMUM OIL CONTROL

Stable operation of compressor by optimum oil control

1	High trapping efficiency, large capacity cyclone type oil separator
2	Oil balance control which maintains uniform oil levels
3	Optimum EEV control for oil and refrigerant circulation

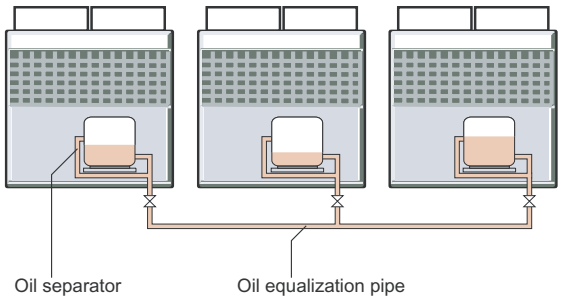

■BLUE FIN HEAT EXCHANGER MOUNTED

Corrosion-resistance of the heat exchanger even in coastal areas has been improved by blue fin treatment of the outdoor unit heat exchanger.

■WEB MONITORING TOOL

Software

Trouble free operation at all times by web monitoring system

The operation status of the VRF system within the building can be monitored in real time over the Internet.

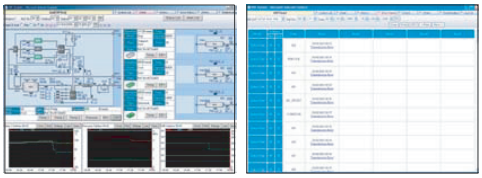

*Please contact your distributor for details.

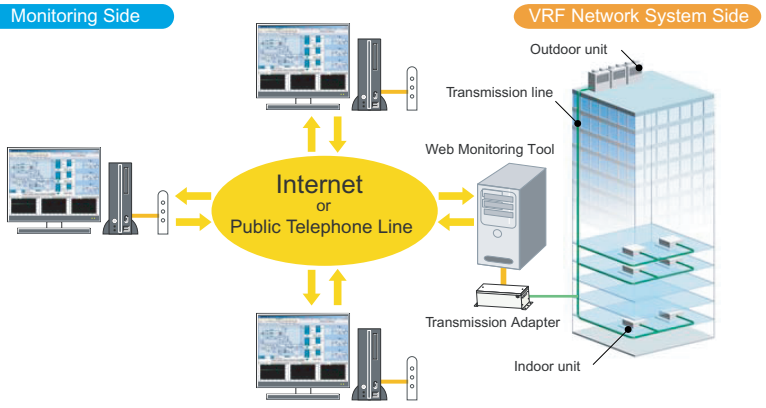

GENERAL INFORMATION

1-1-2. IMPROVED COMFORT

■ INDIVIDUAL AIR CONDITIONING SYSTEM

Pleasant air conditioning meeting individual room requirements.

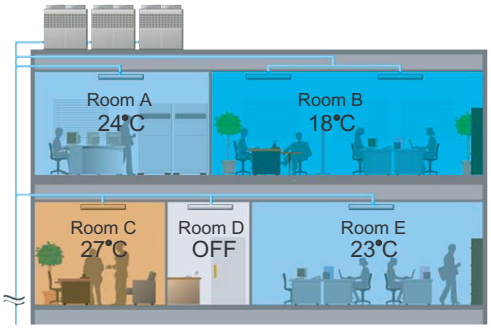

■ LIQUID LEVEL BALANCE CONTROL

Stable capacity and reduction of refrigerant noise by optimum state of refrigerant

Balancing of the refrigerant in the system is optimized by liquid level balance control and subcool circuit between the receiver tanks of each outdoor unit. Stable refrigerant supply allows long pipe runs and achieves stable operational system performance whilst reducing unpleasant refrigerant noise.

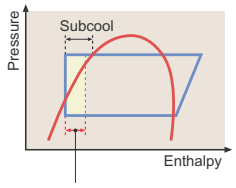

Increased refrigerant capacity by subcool

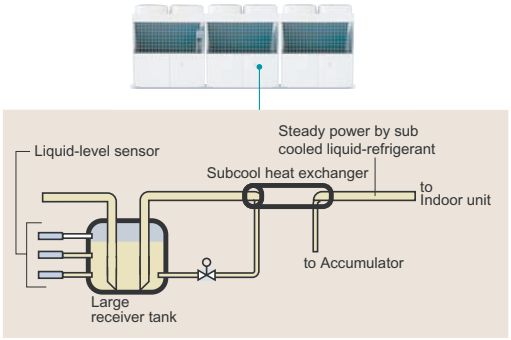

■ ROOM TEMPERATURE CONTROL

Comfort at any time by high precision refrigerant flow control

High precision ± 0.5℃ ensures comfortable temperature control of the room. This is achieved by smooth refrigerant flow, controlled by inverter and by the indoor unit electronic expansion valve.

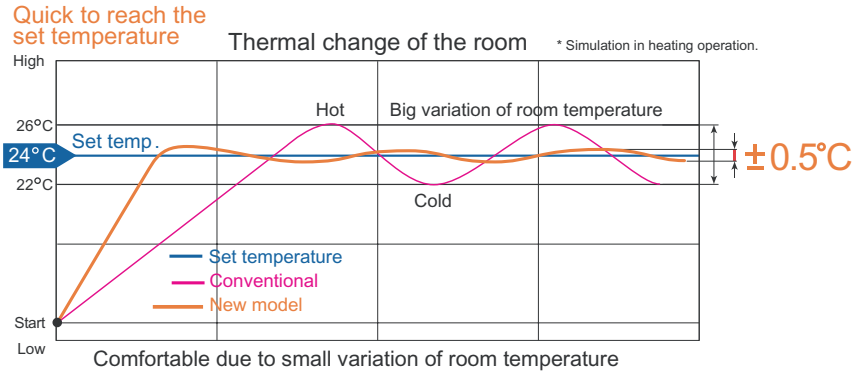

Comfortable due to small variation of room temperature

■ INVERTER CONTROL

Comfort and energy saving achieved by implementation of inverter control

Comfort and energy saving is achieved by the adoption of linear step control in conjunction with inverter and constant speed compressor combination, which allows more precise control of the necessary refrigerant circulation amount required according to the system load. This also allows for a comfortable environment by use of smooth capacity control.

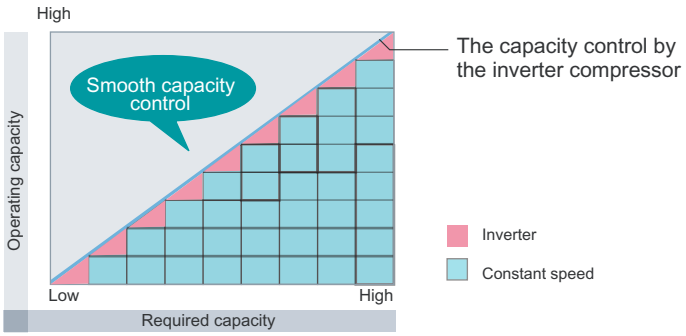

■ SUPER QUIET

Outdoor unit

Quiet operating sound outdoor unit achieved

Operating noise has been reduced further through the application of a new dual casing bell mouth and large fan. The noise level can be reduced by 4-5dB (A) compared to normal operation by selecting silent operation.

Indoor unit

Quiet indoor units suited for bedrooms and other rooms which require quietness are available.

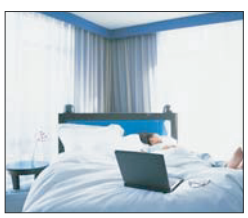

Compact Duct
Silent Model

Low Static Pressure Duct
Silent Model

Compact Wall Mounted
Comfort Model

GENERAL INFORMATION

1-1-3. HIGH EFFICIENCY OPERATION

■ EFFECTIVE USE OF THE HEAT EXCHANGER OF OTHER OUTDOOR UNITS

This system takes advantage of the features of the multi type outdoor unit

The heat exchanger is operated at maximum efficiency by effectively using the heat exchanger of each outdoor unit reciprocally.

Example

The larger heat exchanger than the capacity of compressor is used in each outdoor unit. (V series)

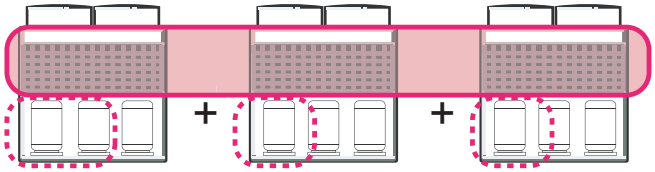

Conventional method

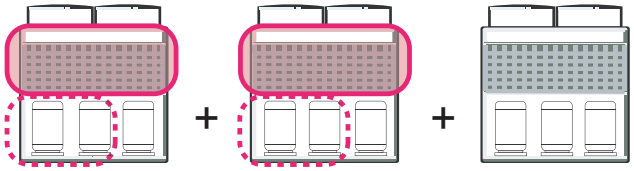

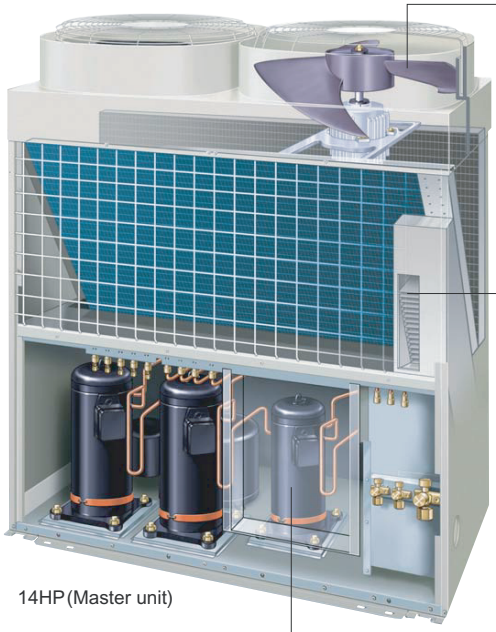

14HP (Master unit)

Large propeller fan

A newly designed fan is adopted for achieving higher performance and reducing the noise level.

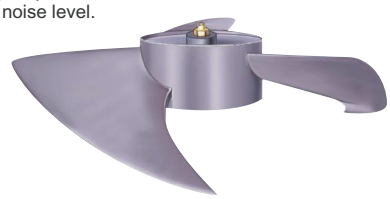

Sine-wave DC Inverter Control

By adopting Sine-Wave DC Inverter Control for smoothing the motor running, energy saving and high efficiency operation are realized

Adopted Sine-wave DC inverter control

Equipped with DC inverter scroll compressor

DC inverter + Scroll compressor

By combining the DC inverter controlled scroll compressor with the constant speed scroll compressor, an operating system of energy saving and high efficiency is realized.

■ HIGH EFFICIENCY

All key features of the outdoor unit result in a higher level of COP

* The data refers to a 10HP outdoor unit.
* "COP" is the coefficient of performance [= capacity (kW) ÷ input power (kW)].

※COP values are base on our own testing method.

■ HIGH EFFICIENCY REFRIGERANT R410A

Improvement of operation efficiency realized by adoption of a new refrigerant

Refrigerant R410A

Refrigerant characteristics (Comparison of R22 / R407C / R410A)

Refrigerant	R22	R407C	R410A
Composition element	Single component	Blended (Zeotrope)	Blended (Near azeotrope)
Working Pressure (As compared to R22)	—	Similar	Higher (1.6 times)
Capacity (As compared to R22)	—	Similar	Higher (1.5 times)
Pressure Loss (As compared to R22)	—	Similar	Lower (0.6 times)
Total Efficiency (As compared to R22)	—	Similar	Higher (1.05 times)

GENERAL INFORMATION

1-1-4. DESIGN FREEDOM

■ CONNECTABLE LARGE CAPACITY

The indoor unit connection ratio of this system can be from 50 to 150%(*1) of the outdoor unit capacity, thus achieving a high level of diversification with up to 48 indoor units (30 to 42HP) connectable on one refrigerant system.

*1 Indoor unit connectable capacity is 75 to 150% for single outdoor unit system (8-14HP) in case of including indoor unit model code 18 and under in the system.

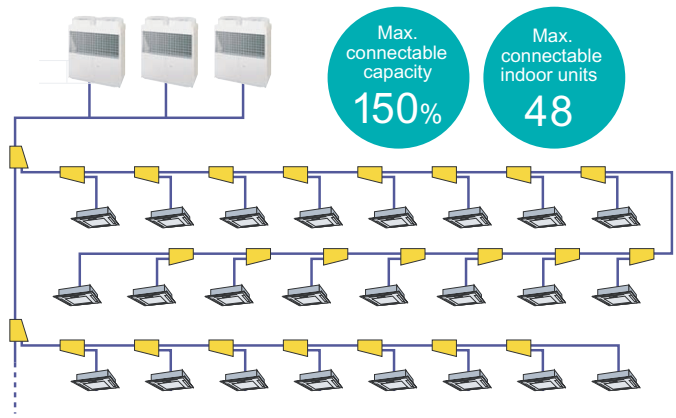

Note : When all indoor units are operating at maximum capacity, individual indoor units operate at a slightly lower capacity.(When connecting more than 100%)

■ LOW OUTDOOR AIR TEMPERATURE OPERATION

Expansion of operating ranges

World's top class low outdoor air temperature operating range is achieved. This extends the potential locations for use to the cold regions of the world.

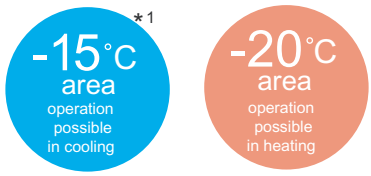

*1 Note : When outdoor units connect multiple operating range is from -5℃ to 43℃ in cooling.

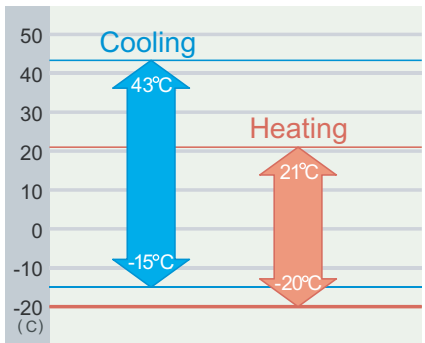

■ LONG PIPING SYSTEM DESIGN

With the V Series, installation up to a maximum piping length of 150m and a maximum height difference of 50m is possible. In addition, the piping can be extended up to a maximum of 60m from the first separation tube.

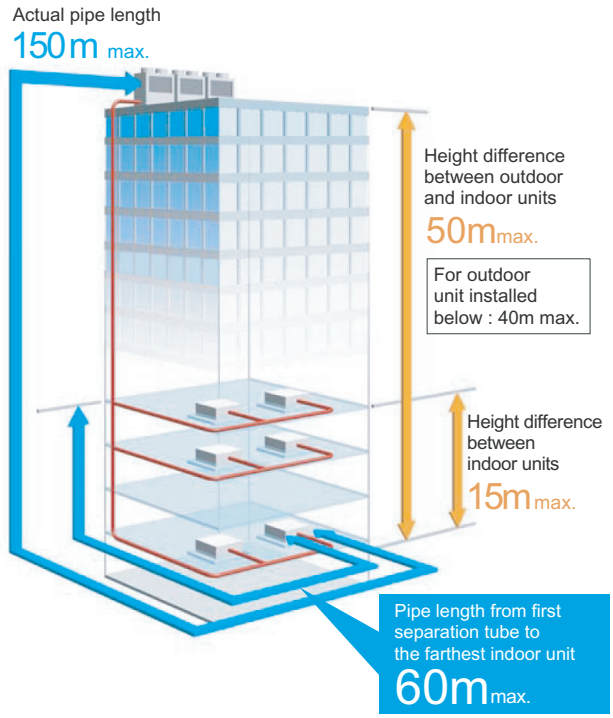

■ COMPACT OUTDOOR UNIT IMPROVES USE OF SPACE

Installation space can be reduced freeing up valuable building space

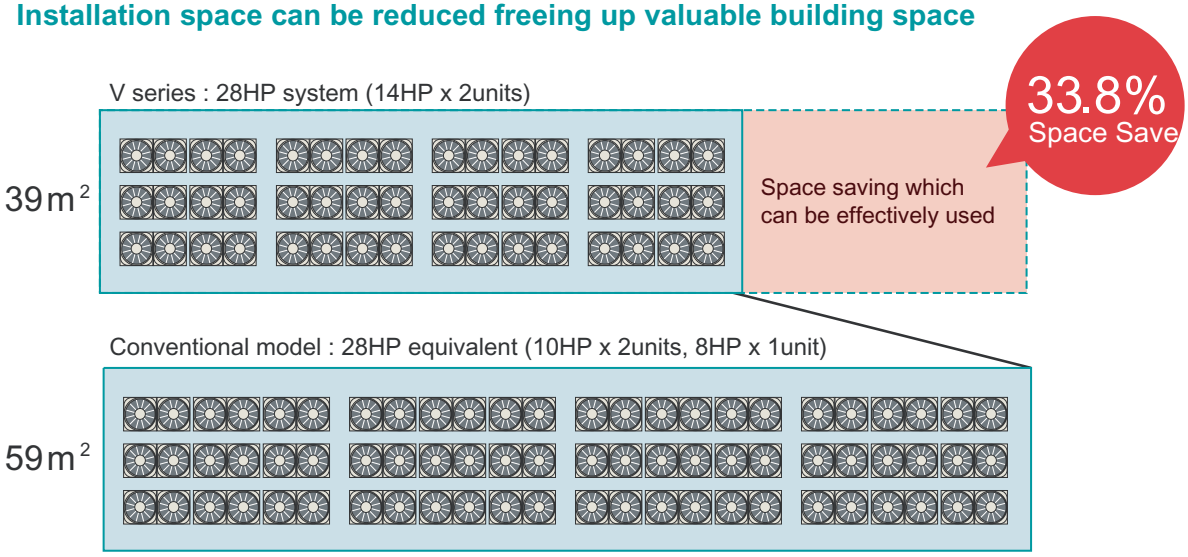

* 12 floors building (28HP capacity is required by each floor)

GENERAL INFORMATION

1-1-5. EASY INSTALLATION

■ SIMPLE COMMUNICATION WIRING

Connection method simplifies installation and prevents errors

By using our wiring connection method, the wiring length is reduced compared to other wiring systems.

AIRSTAGE™

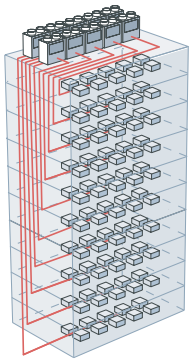

Other wiring method

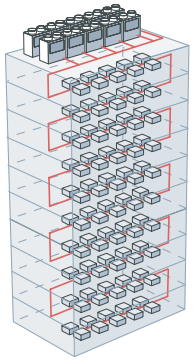

Simple wiring method

■ SIMPLE PIPING SYSTEM

Separation tubes and headers provide connection flexibility and simplicity reducing installation costs.

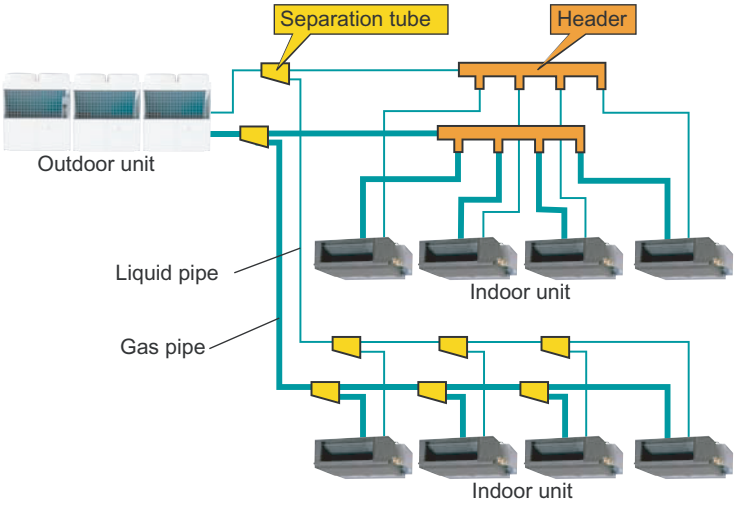

■ PIPE SIZE REDUCTION

Use of R410A refrigerant allows for a pipe size reduction compared to the conventional system. This offers improvement in construction work and a reduction in piping costs.

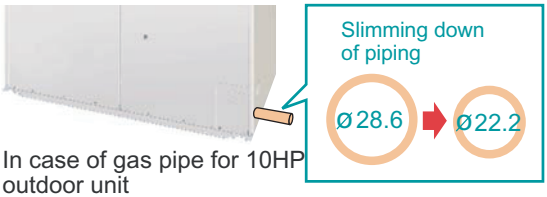

In case of gas pipe for 10HP outdoor unit

■ CHOISE OF 4-DIRECTION PIPING CONNECTION

Piping connection

4-direction piping allows a variety of installation configurations. Easy installation and pipe direction setting.

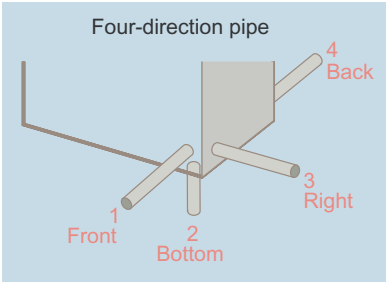

■ PIPING SYSTEM ALLOWS REDUCTION OF THE NUMBER OF PIPES

Example: 90HP = 10HP x 3units x 3

Less piping

Reduction of pipe-duct space

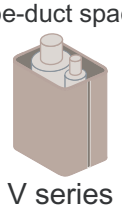

V series

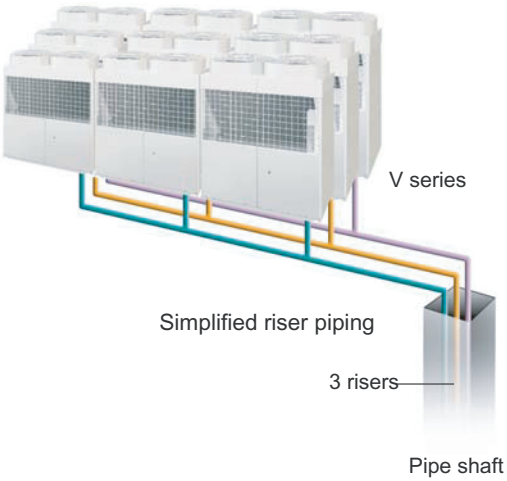

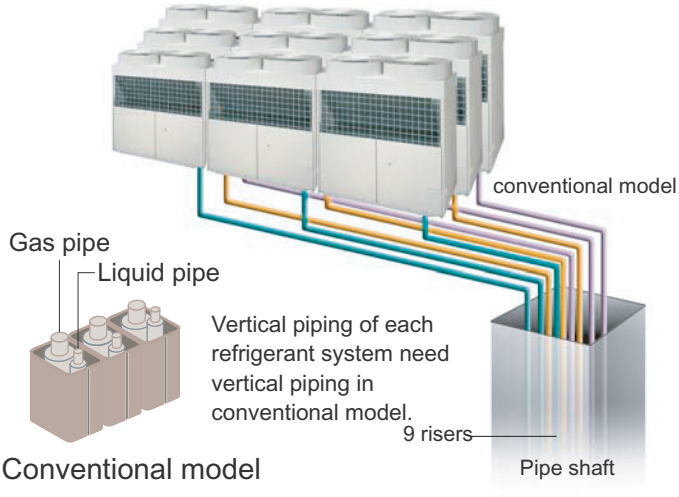

Conventional model

GENERAL INFORMATION

■ COMPACT OUTDOOR UNIT CAN BE CARRIED IN A SMALL ELEVATOR

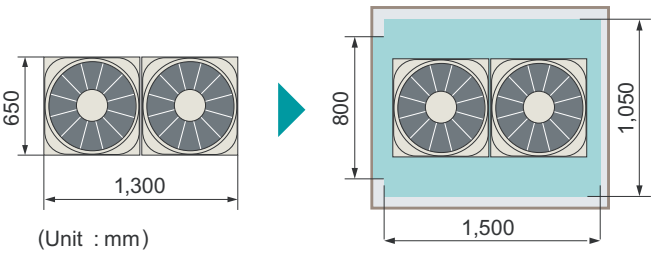

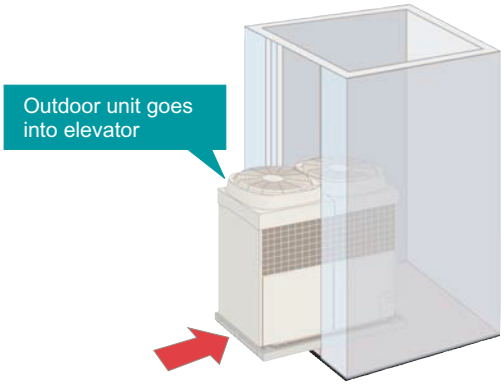

■ LIFTING BELT HOOKS CONVENIENT IN CRANE WORK

Craning into place

The outdoor unit can be lifted by crane and set down on the building roof.

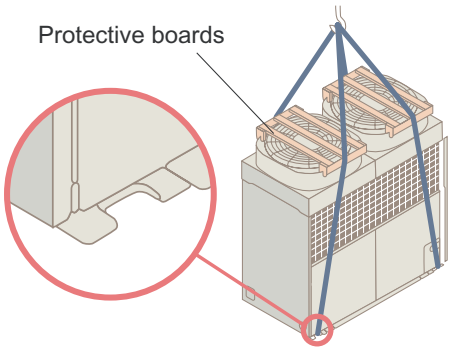

■ EASY REMOVING PALLET

Delivery pallet can be easily removed and installation work can be performed speedily.

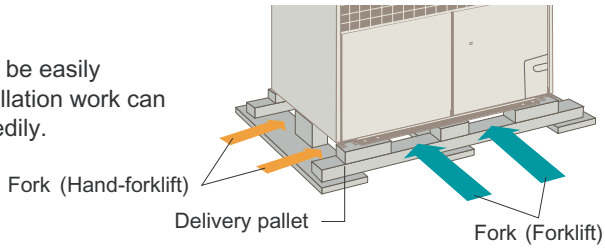

■ EASY REPLACEMENT

Compressor can be moved by pull-out tray which simplifies inspection and replacement work

A pull-out plate ensures easy compressor replacement if necessary.

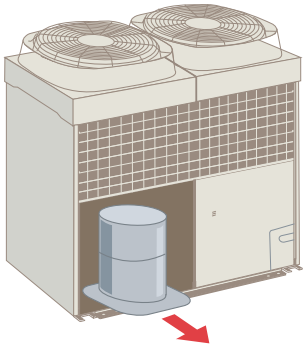

■ DRAIN PAN CLEANING IS EASY

Detachable drain pan simplifies removal of fallen leaves collected in the drain pan at the bottom of the heat exchanger.

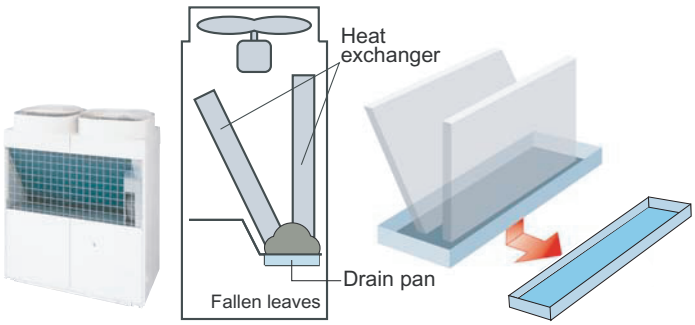

■ SERVICE TOOL **Software**

● MODEL : UTR-YSTC

Extensive monitoring and analysis functions for installation and maintenance.

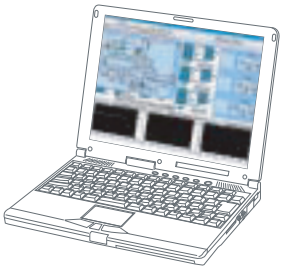

GENERAL INFORMATION

1-2. MODEL LINE UP

■ OUTDOOR UNIT

● Variation of capacity range

The ability to connect 3 outdoor units together in series up to a total capacity of 42HP (120kW) in each 2HP offers greater design freedom, reducing the number outdoor units and piping installation space compared the conventional models.

No. of outdoor unit	System total capacity (kW)						
	22.4 (8HP)	28.0 (10HP)	40.0 (14HP)	- -	- -	- -	- -
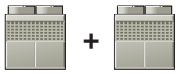	44.8 (16HP)	50.4 (18HP)	56.0 (20HP)	62.4 (22HP)	68.0 (24HP)	80.0 (28HP)	- -
	72.8 (26HP)	84.0 (30HP)	90.4 (32HP)	96.0 (34HP)	102 (36HP)	108 (38HP)	120 (42HP)

● Model line up

Type	Capacity	Model name
Master	22.4kW (8HP)	AJ✱A72LBTF
	28.0kW (10HP)	AJ✱A90LBTF
	40.0kW (14HP)	AJ✱126LBTF
Slave	22.4kW (8HP)	AJ✱A72UBTF
	28.0kW (10HP)	AJ✱A90UBTF
	40.0kW (14HP)	AJ✱126UBTF

● Capacity range

HP	Capacity (kW)	Maximum connectable indoor unit
8	22.4	15
10	28.0	16
14	40.0	16
16	44.8	30
18	50.4	32
20	56.0	32
22	62.4	32
24	68.0	32

HP	Capacity (kW)	Maximum connectable indoor unit
26	72.8	32
28	80.0	32
30	84.0	48
32	90.4	48
34	96.0	48
36	102	48
38	108	48
42	120	48

● Refrigerant : R410A

Master type

Model name
AJ ✱A72LBTF
AJ ✱A90LBTF
AJ ✱126LBTF

Slave type

Model name
AJ ✱A72UBTF
AJ ✱A90UBTF
AJ ✱126UBTF

GENERAL INFORMATION

● Combination of outdoor units

HP	Capacity (kW)	MODEL NAME (FUJITSU)			MODEL NAME (GENERAL)		
		Master	Slave1	Slave2	Master	Slave1	Slave2
8	22.4	AJYA72LBTF	-	-	AJGA72LBTF	-	-
10	28.0	AJYA90LBTF	-	-	AJGA90LBTF	-	-
14	40.0	AJY126LBTF	-	-	AJG126LBTF	-	-
16	44.8	AJYA72LBTF	AJYA72UBTF	-	AJGA72LBTF	AJGA72UBTF	-
18	50.4	AJYA90LBTF	AJYA72UBTF	-	AJGA90LBTF	AJGA72UBTF	-
20	56.0	AJYA90LBTF	AJYA90UBTF	-	AJGA90LBTF	AJGA90UBTF	-
22	62.4	AJY126LBTF	AJYA72UBTF	-	AJG126LBTF	AJGA72UBTF	-
24	68.0	AJY126LBTF	AJYA90UBTF	-	AJG126LBTF	AJGA90UBTF	-
26	72.8	AJYA90LBTF	AJYA72UBTF	AJYA72UBTF	AJGA90LBTF	AJGA72UBTF	AJGA72UBTF
28	80.0	AJY126LBTF	AJY126UBTF	-	AJG126LBTF	AJG126UBTF	-
30	84.0	AJYA90LBTF	AJYA90UBTF	AJYA90UBTF	AJGA90LBTF	AJGA90UBTF	AJGA90UBTF
32	90.4	AJY126LBTF	AJYA90UBTF	AJYA72UBTF	AJG126LBTF	AJGA90UBTF	AJGA72UBTF
34	96.0	AJY126LBTF	AJYA90UBTF	AJYA90UBTF	AJG126LBTF	AJGA90UBTF	AJGA90UBTF
36	102	AJY126LBTF	AJY126UBTF	AJYA72UBTF	AJG126LBTF	AJG126UBTF	AJGA72UBTF
38	108	AJY126LBTF	AJY126UBTF	AJYA90UBTF	AJG126LBTF	AJG126UBTF	AJGA90UBTF
42	120	AJY126LBTF	AJY126UBTF	AJY126UBTF	AJG126LBTF	AJG126UBTF	AJG126UBTF

GENERAL INFORMATION

■ INDOOR UNIT

● Model line up (1/2)

Various combinations of types and capacity 11 types 50 models, ranging from 2.20kW to 25.4kW.

Capacity / Type		Compact Cassette	Cassette	Compact Duct	Low Static Pressure Duct	Duct	High Static Pressure Duct
* kW	Model code						
2.20	7	●		●			
2.80	9	●		●			
3.60	12	●		●			
4.05	14	●		●			
5.30	18	●		●			
5.70	20		● Slim Type				
6.80	24						
7.05	25		● Slim Type		●	●	
8.80	30		● Slim Type		●	●	
10.5	36		●		●	●	●
12.7	45		●		●	●	●
14.1	54		●				
17.0	60						●
25.4	90						●

* The kW shown in the table are reference values, so refer to the rated values in the 4-3 SPECIFICATIONS for details.

Compact Cassette

AUXB07LATF
AUXB09LATF
AUXB12LATF
AUXB14LATF
AUXB18LATF

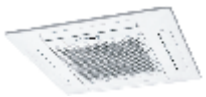

Cassette

Slim Type

AU*A20LATF
AU*A25LATF
AU*A30LATF

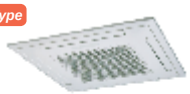

AU*A36LATF
AU*A45LATF
AU*A54LATF

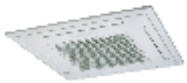

Compact Duct

ARXB07LALF
ARXB09LALF

ARXB12LALF
ARXB14LALF
ARXB18LALF

Low Static Pressure Duct

ARXB25LATF
ARXB30LATF
ARXB36LATF
ARXB45LATF

Duct

ARXA25LATF
ARXA30LATF
ARXA36LATF
ARXA45LATF

High Static Pressure Duct

ARXC36LATF
ARXC45LATF
ARXC60LATF

ARXC90LATF

GENERAL INFORMATION

● Model line up (2/2)

Various combinations of types and capacity 11 types 50 models, ranging from 2.20kW to 25.4kW.

Capacity \ Type	Floor / Ceiling	Ceiling	Compact Wall Mounted (Comfort model)	Wall Mounted	Ceiling Wall
* kW / Model code					
2.20 / 7			●		●
2.80 / 9			●		●
3.60 / 12	●		●		●
4.05 / 14	●		●		●
5.30 / 18	●			●	●
5.70 / 20					
6.80 / 24	●			●	●
7.05 / 25					
8.80 / 30		●		●	●
10.5 / 36		●			
12.7 / 45		●			
14.1 / 54		●			
17.0 / 60					
25.4 / 90					

* The kW shown in the table are reference values, so refer to the rated values in the 4-3 SPECIFICATIONS for details.

Floor / Ceiling

AB*A12LATF
AB*A14LATF
AB*A18LATF
AB*A24LATF

Ceiling

AB*A30LATF
AB*A36LATF
AB*A45LATF
AB*A54LATF

Compact Wall Mounted (Comfort model)

AS*E07LACF
AS*E09LACF
AS*E12LACF
AS*E14LACF

EV kit

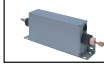

Wall Mounted

AS*A18LATF
AS*A24LATF
AS*A30LATF

Ceiling Wall

AW*A07LATF
AW*A09LATF
AW*A12LATF
AW*A14LATF
AW*A18LATF
AW*A24LATF
AW*A30LATF

GENERAL INFORMATION

■ OPTIONAL PARTS (CONTROLLER)

● Model line up

Type	Model
PC Controller	UTR-YOTB
Central Remote Controller	UTB-YCA, UTB-GCA
Group Remote Controller	UTB-YDB, UTB-GDB
Wired Remote Controller	UTB-YUB, UTB-GUB, UTB-TUB
Simple Remote Controller (With master control)	UTB-YPB, UTB-GPB, UTB-TPB
Simple Remote Controller (Without master control)	UTB-YRA, UTB-GRA, UTB-TRA
Wireless Remote Controller	UTB-YVB, UTB-GVB

● Central control

PC Controller	Central Remote Controller	Group Remote Controller
UTR-YOTB	UTB-YCA/ UTB-GCA	UTB-YDB / UTB-GDB Group remote convertor (UTR-YRDA) is needed to connect group remote controller to VRF network system.

● Individual control

Wired Remote Controller	Simple Remote Controller		Wireless Remote Controller
	(With master control)	(Without master control)	
UTB-YUB / UTB-GUB / UTB-TUB	UTB-YPB / UTB-GPB / UTB-TPB	UTB-YRA / UTB-GRA / UTB-TRA	UTB-YVB / UTB-GVB

GENERAL INFORMATION

■ OPTIONAL PARTS (ADAPTOR / CONVERTOR)

Network Convertor

Model : UTR-YRDA

Split type systems can be controlled from a central controller via the convertor.

Group remote controller can be controlled up to 96 indoor units via the convertor.

Network Convertor for LONWORKS®

Model : UTR-YLLA

For connection between our LONWORKS® system and a LONWORKS® open network for the management of a small to medium-sized BMS and VRF network system.

BACnet® Gateway [Software]

Model : UTR-YLBA

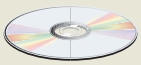

CD-ROM (Software)

Software protection Key

The central control of maximum 1600 indoor units can be realized by connecting the VRF network system to the BACnet®, a global standard of the open network.

Transmission Adaptor

Model : UTR-YTMA

For the air condition of the medium and large size building, the control software can control and monitor the air conditioners together with the ones in the other buildings.

Signal Amplifier

Model : UTR-YRPC

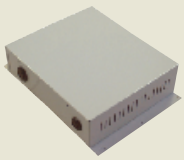

If the total length of transmission line exceeds 500m, or the number of units exceeds 64, Signal Amplifier will be necessary to use.

External Switch Controller

Model : UTR-YESA

Air conditioner switching can be controlled by connecting other external sensor switches.

■ OPTIONAL PARTS (MAINTENANCE)

Web Monitoring Tool

Model : UTR-YMSA

Trouble free operation at all times by web monitoring system.

The operation status of the VRF network system within the building can be monitored in real time over the Internet.

GENERAL INFORMATION

■ OPTIONAL PARTS (BRANCH KIT)

Outdoor Unit Branch Kit

Model : UTR-CP567X
UTR-CP567L

Liquid Pipe

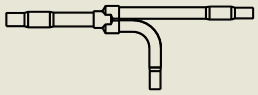

Gas Pipe

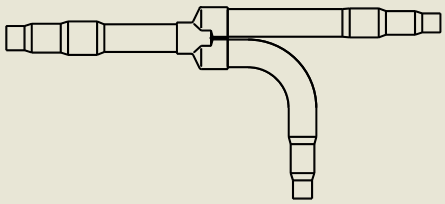

Oil Pipe

Separation Tube

Model : UTR-BP567X
UTR-BP567L

Liquid Pipe

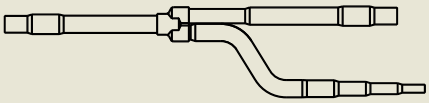

Gas Pipe

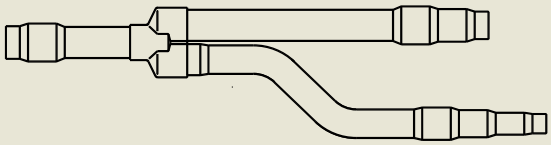

Separation Tube

Model : UTR-BP090X
UTR-BP090L

Liquid Pipe

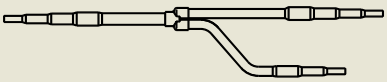

Gas Pipe

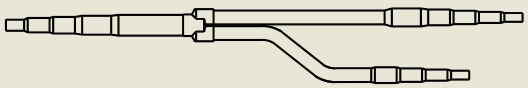

Separation Tube

Model : UTR-BP180X
UTR-BP180L

Liquid Pipe

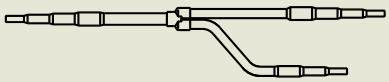

Gas Pipe

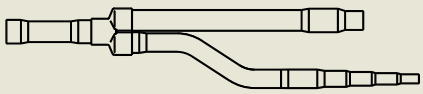

Header

Model : UTR-H0906L	Model : UTR-H1806L	Model : UTR-H0908L	Model : UTR-H1808L
Liquid Pipe 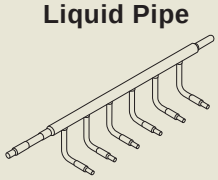	Liquid Pipe 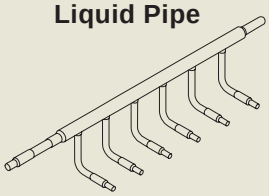	Liquid Pipe 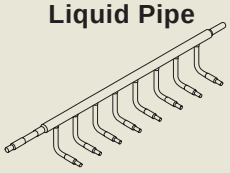	Liquid Pipe 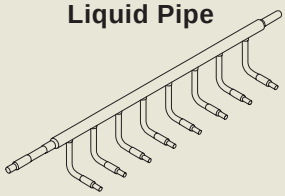
Gas Pipe 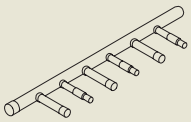	Gas Pipe 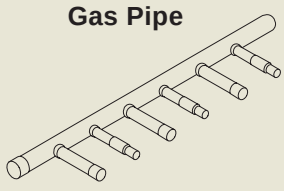	Gas Pipe 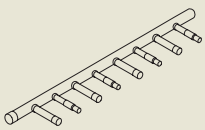	Gas Pipe 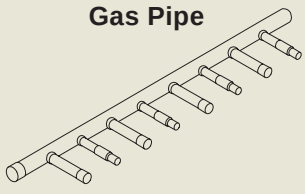

GENERAL INFORMATION

■ OPTIONAL PARTS (OTHERS)

Flange (Square) — Model : UTD-SF045T

For Low Static Pressure Duct / Duct type
205 x 1,063, L=40 (mm)

Flange (Round) — Model : UTD-RF204

For Low Static Pressure Duct / Duct type
ϕ195 (ϕ205), L=85 (mm)

Long-life Filter — Model : UTD-LF25NA

For Low Static Pressure Duct / Duct type

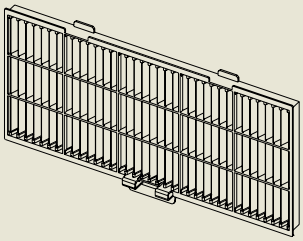

x 2 pcs

Long-life Filter — Model : UTD-LF60KA

For High Static Pressure Duct type
For ARXC36
For ARXC45
For ARXC60

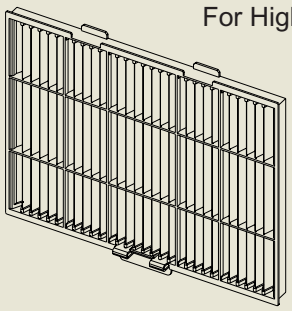

x 2 pcs

Drain Pump Unit — Models : UTZ-PX1BBA *1, UTZ-PX1NBA *2

*1 For Compact Duct type
*2 For Low Static Pressure Duct type / Duct type

Drain Pump Unit — Model : UTR-DPB24T

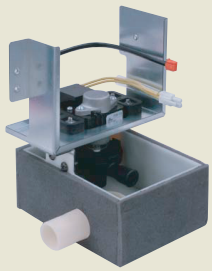

For Ceiling type

IR Receiver Unit — Models : UTB-YWA, UTB-TWA

For all Duct type

Remote Sensor Unit — Model : UTD-RS100

Thermo-sensor for sensing the temperature of arbitrary place in the room

Grille Kit — Models : UTG-UDYD-W, UTG-UDGD-W

For Compact Cassette type

EV Kit — Models : UTR-EV09XA, UTR-EV14XA

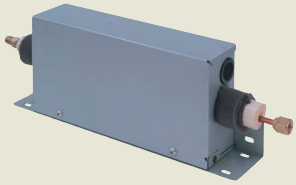

For Compact Wall Mounted type (Comfort model)

Refrigerant R410A
INVERTER

AIRSTAGE™
V SERIES

2. MODEL SELECTION

2-1. MODEL SELECTION PROCEDURE

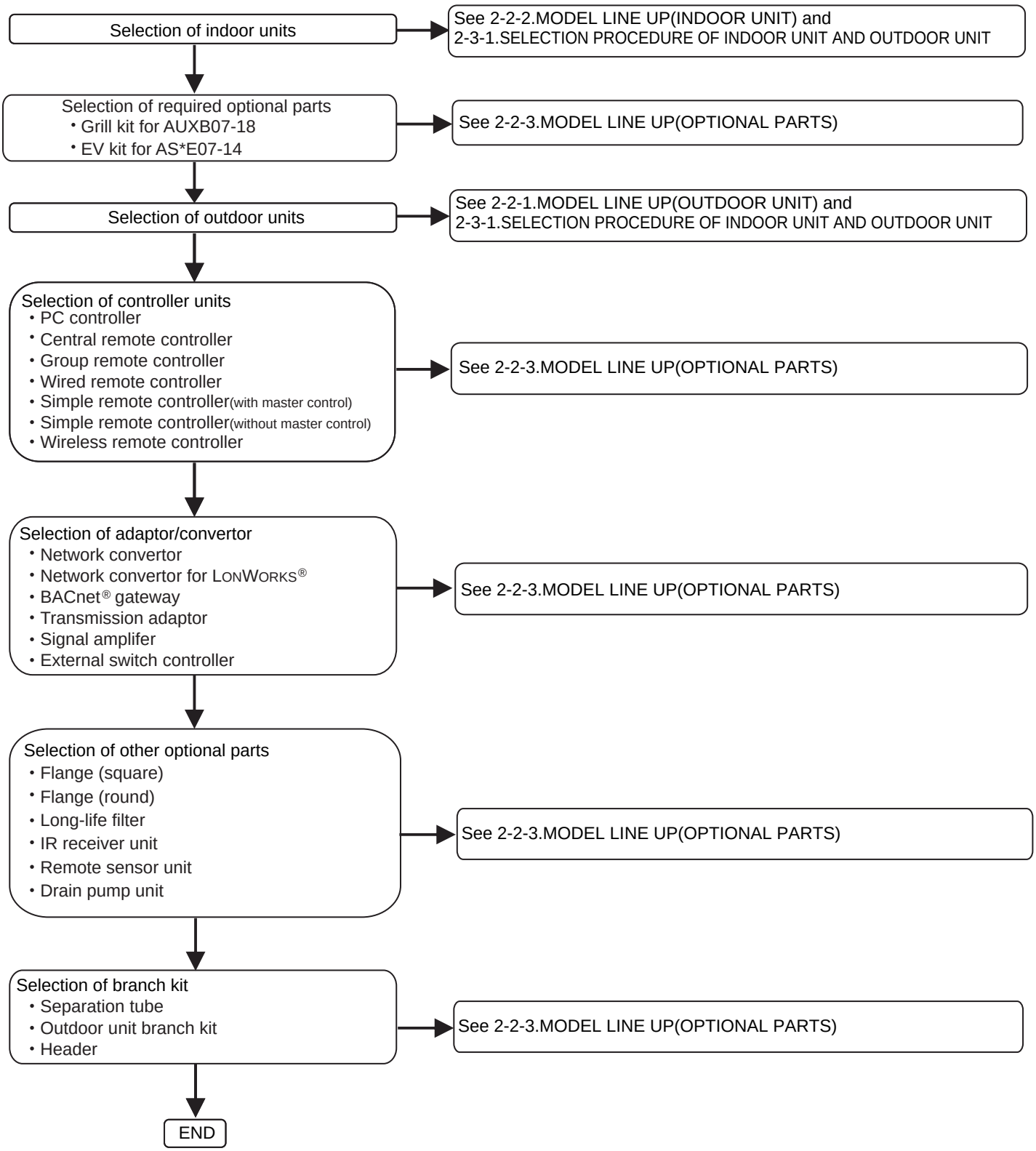

MODEL SELECTION

MODEL SELECTION

2-2. MODEL LINE UP

2-2-1. MODEL LINE UP (OUTDOOR UNIT)

■LINE UP

Type	Capacity	Model name
Master	22.4kW (8HP)	AJ✱A72LBTF
	28.0kW (10HP)	AJ✱A90LBTF
	40.0kW (14HP)	AJ✱126LBTF
Slave	22.4kW (8HP)	AJ✱A72UBTF
	28.0kW (10HP)	AJ✱A90UBTF
	40.0kW (14HP)	AJ✱126UBTF

■REFRIGERANT R410A

■CAPACITY RANGE

HP	Capacity (kW)	Operating capacity of indoor unit (kW)	✱3 Maximum connectable indoor unit	Indoor unit connectable capacity (kW)	
8	22.4	2.20 to 33.6	15	11.2 to 33.6	✱1 ✱2 50% to 150%
10	28.0	2.20 to 42.0	16	14.0 to 42.0	
14	40.0	2.20 to 60.0		20.0 to 60.0	
16	44.8	2.20 to 67.2	30	22.4 to 67.2	✱1 50% to 150%
18	50.4	2.20 to 75.6	32	25.2 to 75.6	
20	56.0	2.20 to 84.0		28.0 to 84.0	
22	62.4	2.20 to 93.6		31.2 to 93.6	
24	68.0	2.20 to 102		34.0 to 102	
26	72.8	2.20 to 109		36.4 to 109	
28	80.0	2.20 to 120		40.0 to 120	
30	84.0	2.20 to 126	48	42.0 to 126	
32	90.4	2.20 to 135		45.2 to 135	
34	96.0	2.20 to 144		48.0 to 144	
36	102	2.20 to 153		51.0 to 153	
38	108	2.20 to 162		54.0 to 162	
42	120	2.20 to 180		60.0 to 180	

✱1 Based on rated cooling capacity.

✱2 Indoor unit connectable capacity is 75 to 150% for single outdoor unit system (8-14HP) in case of including indoor unit model code 18 and under in the system.

✱3 Minimum connectable indoor unit number is 2.
However ARXC90 can be used single connection.

■ COMBINATION OF OUTDOOR UNITS

HP	Capacity (kW)		MODEL NAME (FUJITSU)			MODEL NAME (GENERAL)		
	Cooling	Heating	Master	Slave1	Slave2	Master	Slave1	Slave2
8	22.4	25.0	AJYA72LBTF	-	-	AJGA72LBTF	-	-
10	28.0	31.5	AJYA90LBTF	-	-	AJGA90LBTF	-	-
14	40.0	45.0	AJY126LBTF	-	-	AJG126LBTF	-	-
16	44.8	50.0	AJYA72LBTF	AJYA72UBTF	-	AJGA72LBTF	AJGA72UBTF	-
18	50.4	56.5	AJYA90LBTF	AJYA72UBTF	-	AJGA90LBTF	AJGA72UBTF	-
20	56.0	63.0	AJYA90LBTF	AJYA90UBTF	-	AJGA90LBTF	AJGA90UBTF	-
22	62.4	70.0	AJY126LBTF	AJYA72UBTF	-	AJG126LBTF	AJGA72UBTF	-
24	68.0	76.5	AJY126LBTF	AJYA90UBTF	-	AJG126LBTF	AJGA90UBTF	-
26	72.8	81.5	AJYA90LBTF	AJYA72UBTF	AJYA72UBTF	AJGA90LBTF	AJGA72UBTF	AJGA72UBTF
28	80.0	90.0	AJY126LBTF	AJY126UBTF	-	AJG126LBTF	AJG126UBTF	-
30	84.0	94.5	AJYA90LBTF	AJYA90UBTF	AJYA90UBTF	AJGA90LBTF	AJGA90UBTF	AJGA90UBTF
32	90.4	102	AJY126LBTF	AJYA90UBTF	AJYA72UBTF	AJG126LBTF	AJGA90UBTF	AJGA72UBTF
34	96.0	108	AJY126LBTF	AJYA90UBTF	AJYA90UBTF	AJG126LBTF	AJGA90UBTF	AJGA90UBTF
36	102	115	AJY126LBTF	AJY126UBTF	AJYA72UBTF	AJG126LBTF	AJG126UBTF	AJGA72UBTF
38	108	122	AJY126LBTF	AJY126UBTF	AJYA90UBTF	AJG126LBTF	AJG126UBTF	AJGA90UBTF
42	120	135	AJY126LBTF	AJY126UBTF	AJY126UBTF	AJG126LBTF	AJG126UBTF	AJG126UBTF

2-2-2. MODEL LINE UP (INDOOR UNIT)

■ LINE UP

TYPE	RATED CAPACITY (KW)		MODEL NAME (Fujitsu)	MODEL NAME (General)	Remarks
	Cooling	Heating			
Compact Cassette	2.20	2.50	AUXB07LATF		Grille kit UTG-UDYD-W (FUJITSU) UTG-UDGD-W (GENERAL)
	2.80	3.20	AUXB09LATF		
	3.60	4.10	AUXB12LATF		
	4.00	4.50	AUXB14LATF		
	5.00	5.45	AUXB18LATF		
Cassette	5.70	5.80	AUYA20LATF	AUGA20LATF	
	7.05	7.85	AUYA25LATF	AUGA25LATF	
	8.80	9.10	AUYA30LATF	AUGA30LATF	
	10.5	12.7	AUYA36LATF	AUGA36LATF	
	12.7	13.7	AUYA45LATF	AUGA45LATF	
	14.1	15.8	AUYA54LATF	AUGA54LATF	
Compact Duct	2.20	2.50	ARXB07LALF		
	2.80	3.20	ARXB09LALF		
	3.60	4.10	ARXB12LALF		
	4.00	4.80	ARXB14LALF		
	5.30	5.60	ARXB18LALF		
Low Static Pressure Duct	7.00	7.70	ARXB25LATF		
	8.80	9.50	ARXB30LATF		
	10.5	12.7	ARXB36LATF		
	12.7	14.3	ARXB45LATF		
Duct	7.00	7.70	ARXA25LATF		
	8.80	9.50	ARXA30LATF		
	10.5	12.7	ARXA36LATF		
	12.7	14.3	ARXA45LATF		
High Static Pressure Duct	10.5	12.7	ARXC36LATF		
	12.7	14.3	ARXC45LATF		
	17.0	18.2	ARXC60LATF		
	25.4	29.5	ARXC90LATF		
Floor / Ceiling	3.60	4.10	ABYA12LATF	ABGA12LATF	
	4.05	5.00	ABYA14LATF	ABGA14LATF	
	5.30	5.60	ABYA18LATF	ABGA18LATF	
	6.60	7.70	ABYA24LATF	ABGA24LATF	
Ceiling	8.80	9.10	ABYA30LATF	ABGA30LATF	
	10.5	12.7	ABYA36LATF	ABGA36LATF	
	12.7	13.7	ABYA45LATF	ABGA45LATF	
	14.1	15.8	ABYA54LATF	ABGA54LATF	
Compact Wall Mounted (Comfort model)	2.20	2.50	ASYE07LACF	ASGE07LACF	EV kit : UTR-EV09XA
	2.80	3.20	ASYE09LACF	ASGE09LACF	
	3.60	4.10	ASYE12LACF	ASGE12LACF	EV kit : UTR-EV14XA
	4.00	4.80	ASYE14LACF	ASGE14LACF	
Wall Mounted	5.40	5.60	ASYA18LATF	ASGA18LATF	
	6.90	7.80	ASYA24LATF	ASGA24LATF	
	8.00	8.80	ASYA30LATF	ASGA30LATF	
Ceiling Wall	2.20	2.50	AWYA07LATF	AWGA07LATF	
	2.80	3.20	AWYA09LATF	AWGA09LATF	
	3.60	4.10	AWYA12LATF	AWGA12LATF	
	4.30	4.90	AWYA14LATF	AWGA14LATF	
	5.40	5.60	AWYA18LATF	AWGA18LATF	
	6.90	7.80	AWYA24LATF	AWGA24LATF	
	8.00	8.80	AWYA30LATF	AWGA30LATF	

2-2-3. MODEL LINE UP (OPTIONAL PARTS)

■ CONTROLLER

Models	FUJITSU		GENERAL
		Compatible with Australian Standard	
PC Controller	UTR-YOTB		
Central Remote Controller	UTB-YCA		UTB-GCA
Group Remote Controller	UTB-YDB		UTB-GDB
Wired Remote Controller	UTB-YUB	UTB-TUB	UTB-GUB
Simple Remote Controller (with Master Control)	UTB-YPB	UTB-TPB	UTB-GPB
Simple Remote Controller (without Master Control)	UTB-YRA	UTB-TRA	UTB-GRA
Wireless Remote Controller	UTB-YVB		UTB-GVB

■ ADAPTOR / CONVERTOR

Models	Multi Brand
Network Convertor	UTR-YRDA
Network Convertor for LonWorks ®	UTR-YLLA
BACnet® Gateway	UTR-YLBA
Transmission Adaptor	UTR-YTMA
Signal Amplifier	UTR-YRPC
External Switch Controller	UTR-YESA

■ BRANCH KIT

Models	Multi Brand	Total Model Code of Indoor Unit
Separation Tube	UTR-BP090X / UTR-BP090L	90 or less
	UTR-BP180X / UTR-BP180L	91 to 180
	UTR-BP567X / UTR-BP567L	181 or more
Header	UTR-H0906L	90 or less
	UTR-H1806L	91 to 180
	UTR-H0908L	90 or less
	UTR-H1808L	91 to 180

Models	Multi Brand
Outdoor Unit Branch Kit	UTR-CP567X / UTR-CP567L

■ OTHERS

Models	Multi Brand	Note
Flange (square)	UTD-SF045T	For Low Static Pressure Duct type 205 x 1,063, L=40(mm)
Flange (round)	UTD-RF204	For Low Static Pressure Duct type Ø195 (Ø205),L=85(mm)
Long-life Filter	UTD-LF25NA	For Low Static Pressure Duct type / Duct type
Long-life Filter	UTD-LF60KA	For High Static Pressure Duct type (ARXC36-60)
IR Receiver Unit	UTB-YWA	For Duct type
	UTB-TWA	For Duct type (Compatible with Australian Standard)
Remote Sensor Unit	UTD-RS100	
Drain Pump Unit	UTZ-PX1BBA	For Compact Duct type
	UTZ-PX1NBA	For Low Static Pressure Duct type / Duct type
	UTR-DPB24T	For Ceiling type

2-3. MODEL SELECTION AND CAPACITY CALCULATION

2-3-1. SELECTION PROCEDURE OF INDOOR UNIT AND OUTDOOR UNIT

✻ Please select indoor units and outdoor units and make the capacity of each indoor unit be larger than cooling and heating load.

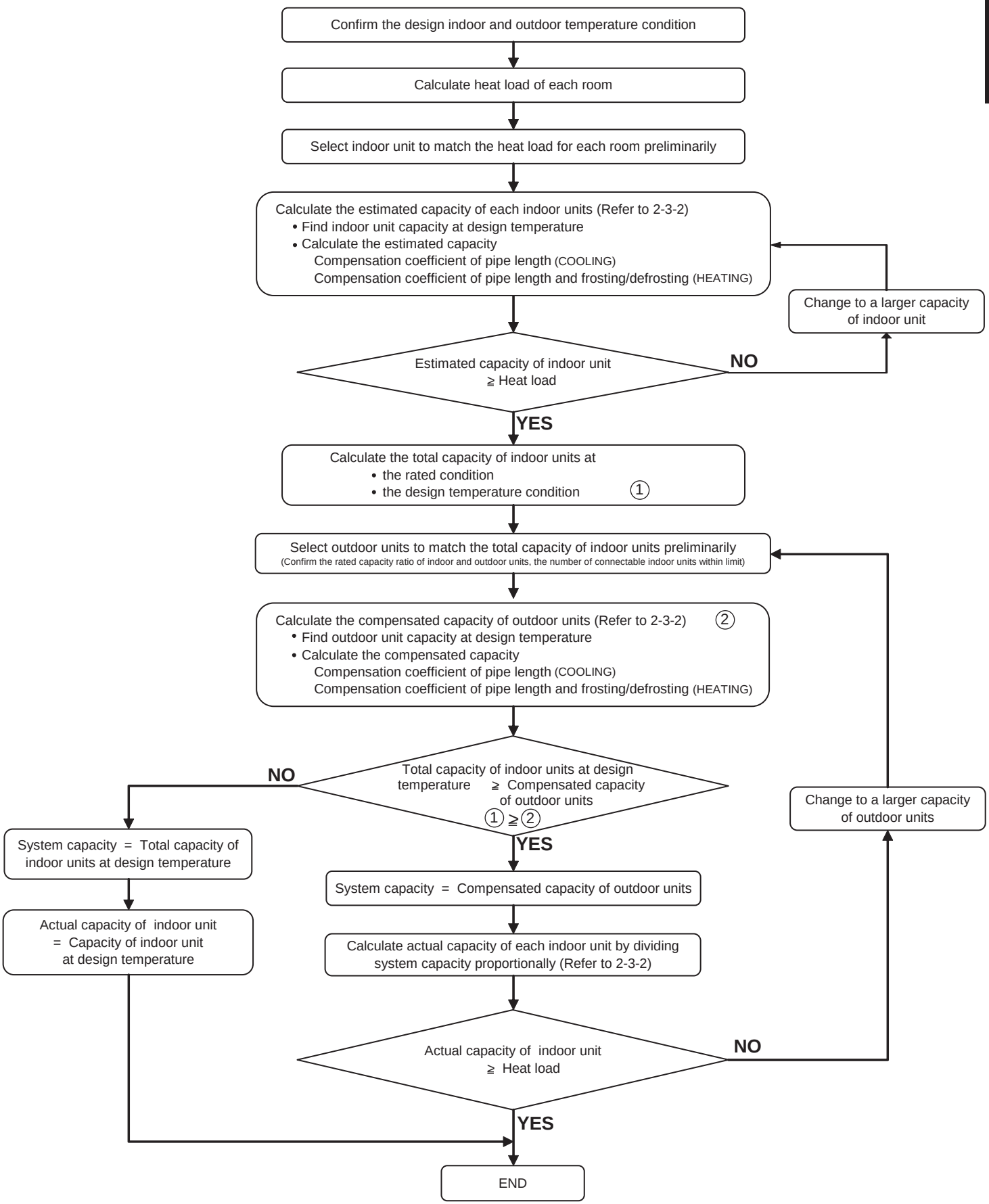

2-3-2. METHOD OF CAPACITY CALCULATION

The capacity calculation method which takes the effects of air temperature, pipe length and frosting/defrosting into consideration is shown below.

MODEL SELECTION

1. Calculate the estimated capacity of each indoor unit.

(1) Find **capacity of indoor unit at rated condition (TCin)r and at design temperature (TCin)d**
[from 2-6 CAPACITY TABLE COOLING (INDOOR UNIT) or 2-7 CAPACITY TABLE HEATING (INDOOR UNIT)]

(2) Find the following compensation coefficient [From 2-5 CAPACITY COMPENSATION COEFFICIENT].
- **Compensation coefficient of pipe length**
- **Compensation coefficient of frosting/defrosting** (Heating calculation only)

(3) Calculate **the estimated capacity of indoor unit (TCin)e.**

COOLING:

Estimated capacity of indoor unit (TCin)e
= Capacity of indoor unit at design temperature (TCin)d
x Compensation coefficient of pipe length

HEATING:

Estimated capacity of indoor unit (TCin)e
= Capacity of indoor unit at design temperature (TCin)d
x Compensation coefficient of pipe length
x Compensation coefficient of frosting/defrosting

2. Calculate the compensated capacity of outdoor units.

(4) Find **capacity of outdoor unit at rated condition (TCout)r** [From 2-2 MODEL LINE UP].

(5) Calculate **total rated capacity of indoor units : Σ(TCin)r**
and **ratio to the rated capacity of outdoor units : Σ(TCin)r / (TCout)r .**

(6) Find capacity of outdoor units at design temperature (TCout)d
[using result of (5) and 2-4 CAPACITY TABLE (OUTDOOR UNIT)].

(7) Calculate **the compensated capacity of outdoor units (TCout)c.**

COOLING:

Compensated capacity of outdoor units (TCout)c
= Capacity of outdoor unit at design temperature (TCout)d
x Compensation coefficient of pipe length

HEATING:

Compensated capacity of outdoor units (TCout)c
= Capacity of outdoor unit at design temperature (TCout)d
x Compensation coefficient of pipe length
x Compensation coefficient of frosting/defrosting

3. Decide system capacity.

(8) Calculate **total capacity of indoor units at design temperature Σ(TCin)d.**

(9) **System capacity** = the smaller one of (TCout)c and Σ(TCin)d. ▪▪▪▪▪▪▪▪▪▪▪ **(7) or (8)**

4. Calculate actual capacity of each indoor unit.

(10) Calculate actual capacity of each indoor unit by dividing system capacity proportionally.

$$\text{Actual capacity of indoor unit} = (\text{System capacity}) \times \frac{\text{Rated capacity of indoor unit}}{\text{Total rated capacity of indoor unit}}$$

$$= (\text{System capacity}) \times \frac{(TCin)r}{\Sigma(TCin)r}$$ ▪▪▪▪ **(9) x (1) / (5)**

2-3-3. THE EXAMPLE OF CALCULATION

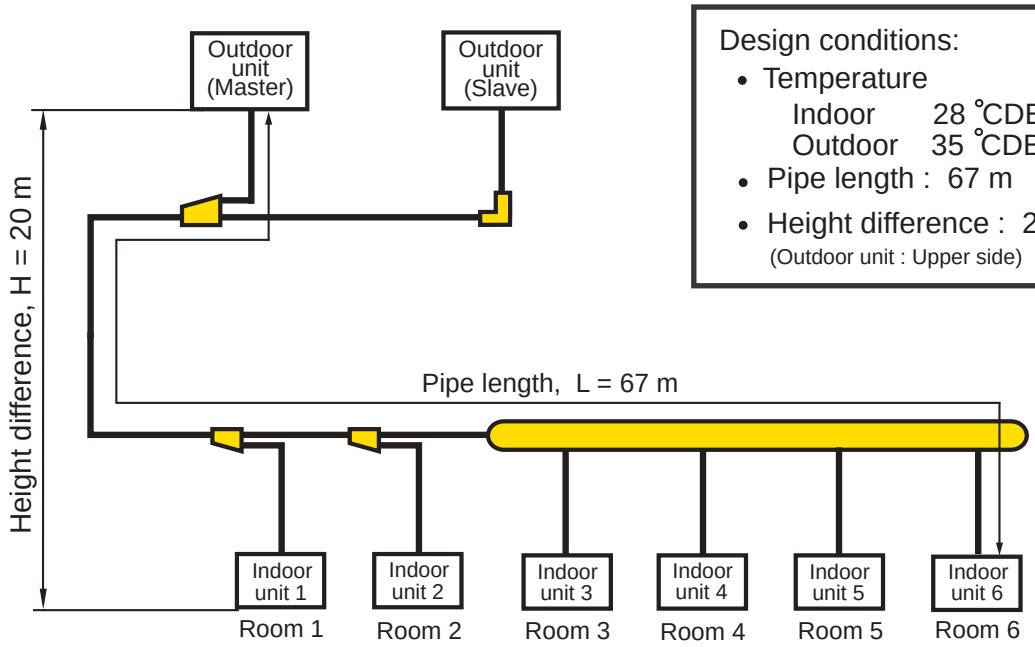

Design conditions:
- Temperature
  Indoor 28 ℃DB / 20℃WB
  Outdoor 35 ℃DB
- Pipe length : 67 m
- Height difference : 20 m
  (Outdoor unit : Upper side)

Fig. 1 Outline of the system

● Selection of indoor unit

			Room 1	Room 2	Room 3	Room 4	Room 5	Room 6	Remark
A - 1	Cooling heat load	kW	12.0	12.0	12.0	12.0	8.30	8.30	
A - 2	Indoor unit models		AU*A45	AU*A45	AU*A45	AU*A45	AU*A30	AU*A30	
A - 3	Rated capacity $(TC_{in})_r$	kW	12.7	12.7	12.7	12.7	8.80	8.80	See 2-6
A - 4	Capacity at design temperature $(TC_{in})_d$	kW	13.6	13.6	13.6	13.6	9.43	9.43	See 2-6
A - 5	Compensation coefficient of pipe length		0.903						See 2-5
A - 6	Estimated capacity of indoor unit $(TC_{in})_e$	kW	12.3	12.3	12.3	12.3	8.52	8.52	(A-4) x (A-5)
A - 7	Total rated capacity $\Sigma(TC_{in})_r$	kW	68.4						Sum of A-3
A - 8	Total capacity at design temperature $\Sigma(TC_{in})_d$	kW	73.3						Sum of A-4

● Preliminary selection of outdoor unit

B - 1	Outdoor unit model		22HP (AJ*126LBTF + AJ*A72UBTF)	
B - 2	Rated capacity $(TC_{out})_r$	kW	62.4	See 2-2
B - 3	Total rated capacity of indoor unit / Rated capacity of outdoor unit $\Sigma(TC_{in})_r / (TC_{out})_r$	%	109.6%	(A-7) / (B-2)
B - 4	Capacity at design temperature $(TC_{out})_d$	kW	69.88	See Fig.2 (ii)
B - 5	Compensation coefficient of pipe length		0.903	See 2-5
B - 6	Compensated capacity of outdoor unit $(TC_{out})_c$	kW	63.1	(B-4) x (B-5)

● Decide system capacity

C - 1	System capacity	kW	63.1	Smaller one of (A-8) and (B-6)

● Calculate actual capacity of each indoor unit

		Room 1	Room 2	Room 3	Room 4	Room 5	Room 6	
Actual capacity of each indoor unit	kW	11.7	11.7	11.7	11.7	8.12	8.12	(C-1) x (A-3) / (A-7)

Since the capacities of indoor units are smaller than the cooling heat loads, change to a larger capacity of outdoor units and calculate again.

● Change to a larger capacity of outdoor unit

B' - 1	Outdoor unit model		24HP (AJ*126LBTF + AJ*A90UBTF)	
B' - 2	Rated capacity $(TC_{out})_r$	kW	68.0	See 2-2
B' - 3	Total rated capacity of indoor unit / Rated capacity of outdoor unit $\Sigma(TC_{in})_r / (TC_{out})_r$	%	100.6%	(A-7) / (B'-2)
B' - 4	Capacity at design temperature $(TC_{out})_d$	kW	73.10	See Fig.2 (iii)
B' - 5	Compensation coefficient of pipe length		0.903	See 2-5
B' - 6	Compensated capacity of outdoor unit $(TC_{out})_c$	kW	66.0	(B'-4) x (B'-5)

● Decide system capacity

C' - 1	System capacity	kW	66.0	Smaller one of (A-8) and (B'-6)

● Calculate actual capacity of each indoor unit

		Room 1	Room 2	Room 3	Room 4	Room 5	Room 6	Remark
Actual capacity of each indoor unit	kW	12.3	12.3	12.3	12.3	8.49	8.49	(C'-1) x (A-3) / (A-7)

Actual capacity of all indoor units is larger than cooling heat load of each room.

(i) Equation for capacity calculation of outdoor unit.

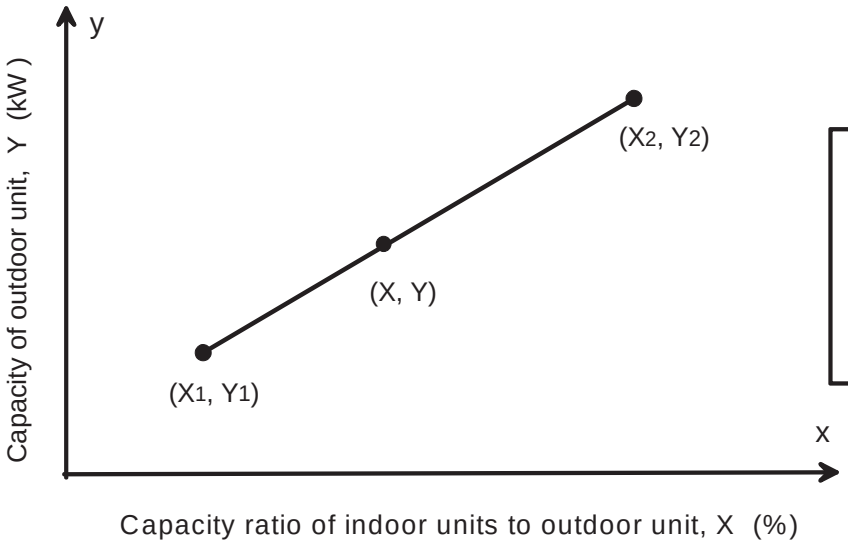

1) Refer to 2-4. CAPACIYY TABLE (OUTDOOR UNIT) to find Y_1 and Y_2 using X_1 and X_2.
2) Calculate capacity of outdoor unit using following equation:

$$Y = (Y_2 - Y_1) / (X_2 - X_1) * (X - X_1) + Y_1$$

MODEL SELECTION

(ii) Cooling capacity table of 22HP outdoor units (AJ*126LBTF + AJ*A72UBTF)

Total rated cooling capacity of indoor unit	Outdoor temperature (°CDB)	Indoor temperature 20°CDB / 15°C WB TC	20°CDB / 15°C WB PI	27°CDB / 19°C WB TC	27°CDB / 19°C WB PI	28°CDB / 20°C WB TC	28°CDB / 20°C WB PI	23°C WB PI
X_2 74.8 (110%)	10	49.0	7.5	68.6	10.0	73.5	10.6	13.3
	35	49.0	13.9	68.6	24.2	70.0 (Y_2)	24.4	25.0
	43	49.0	19.5	62.1	27.8	63.4	28.0	28.5
X_1 62.4 (100%)	10	44.6	6.96	62.4	9.21	66.9	9.8	11.5
	35	44.6	12.2	62.4	20.3	66.9 (Y_1)	23.0	24.7
	43	44.6	16.8	60.5	27.6	61.8	27.7	28.3

Capacity ratio of indoor units to outdoor unit	X1= 100%	X = 109.6%	X2 = 110%
Capacity of outdoor units	Y1 = 66.9	Y	Y2 = 70.0

Y = 69.88 (kW)

(iii) Cooling capacity table of 24HP outdoor units (AJ*126LBTF + AJ*A90UBTF)

Total rated cooling capacity of indoor unit	Outdoor temperature (°CDB)	Indoor temperature 20°CDB / 15°C WB TC	20°CDB / 15°C WB PI	27°CDB / 19°C WB TC	27°CDB / 19°C WB PI	28°CDB / 20°C WB TC	28°CDB / 20°C WB PI	23°C WB PI
X_2 74.8 (110%)	10	53.4	8.1	74.8	10.8	80.1	11.5	14.4
	35	53.4	15.1	74.8	26.3	76.3 (Y_2)	26.5	27.1
	43	53.4	21.2	60.7	30.2	69.1	30.4	31.1
X_1 68.0 (100%)	10	48.6	7.48	68.0	9.49	72.9	10.6	12.4
	35	48.6	13.2	68.0	22.1	72.9 (Y_1)	25.0	26.8
	43	48.6	18.2	65.9	30.0	67.3	30.2	30.8

Capacity ratio of indoor units to outdoor unit	X1= 100%	X = 100.6%	X2 = 110%
Capacity of outdoor units	Y1 = 72.9	Y	Y2 = 76.3

Y = 73.10 (kW)

Fig.2 Method for calculation of capacity of outdoor unit from capacity table

2-4. CAPACITY TABLE (OUTDOOR UNIT)

2-4-1. COOLING CAPACITY

■ MODEL : AJ∗A72L

- **CAPACITY : 22.4kW (8HP)**

MODEL SELECTION

Total rated cooling capacity of indoor unit	Outdoor temperature (°CDB)	Indoor temperature															
		20°CDB / 15°CWB		23°CDB / 16°CWB		24°CDB / 17°CWB		26°CDB / 18°CWB		27°CDB / 19°CWB		28°CDB / 20°CWB		30°CDB / 22°CWB		32°CDB / 23°CWB	
		TC	PI	TC	PI	TC	PI	TC	PI	TC	PI	TC	PI	TC	PI	TC	PI
33.6 (150%)	10	24.0	3.46	26.4	3.74	28.8	4.02	31.2	4.55	33.6	5.21	34.5	5.35	35.8	5.45	36.5	5.50
	15	24.0	3.63	26.4	4.21	28.8	4.85	31.2	5.58	32.5	5.91	33.2	5.96	34.4	6.07	35.1	6.12
	21	24.0	4.57	26.4	5.30	28.8	6.14	30.3	6.59	30.9	6.65	31.5	6.70	32.7	6.82	33.4	6.88
	23	24.0	4.92	26.4	5.72	28.8	6.63	29.7	6.84	30.3	6.90	30.9	6.95	32.1	7.07	32.8	7.13
	25	24.0	5.30	26.4	6.17	28.6	7.03	29.2	7.09	29.7	7.15	30.3	7.20	31.5	7.32	32.2	7.38
	27	24.0	5.71	26.4	6.66	28.0	7.28	28.6	7.34	29.2	7.39	29.8	7.45	30.9	7.59	31.5	7.66
	30	24.0	6.38	26.4	7.50	27.1	7.68	27.7	7.75	28.3	7.82	28.8	7.89	30.0	8.03	30.5	8.10
	33	24.0	7.22	25.7	8.05	26.2	8.12	26.8	8.19	27.3	8.26	27.9	8.33	29.0	8.47	29.6	8.54
	35	24.0	7.90	25.0	8.35	25.6	8.41	26.1	8.48	26.7	8.55	27.2	8.62	28.3	8.76	28.9	8.83
	37	23.9	8.57	24.4	8.64	24.9	8.71	25.5	8.78	26.0	8.85	26.6	8.92	27.7	9.06	28.2	9.13
	40	23.0	9.01	23.5	9.08	24.0	9.15	24.5	9.22	25.0	9.28	25.6	9.35	26.7	9.50	27.2	9.57
	43	22.0	9.45	22.5	9.52	23.0	9.58	23.5	9.65	24.1	9.72	24.6	9.79	25.6	9.93	26.2	10.0
31.4 (140%)	10	22.4	3.27	24.6	3.53	26.9	3.80	29.1	4.06	31.4	4.59	33.6	5.21	35.1	5.40	35.8	5.44
	15	22.4	3.29	24.6	3.78	26.9	4.33	29.1	4.95	31.4	5.63	32.5	5.91	33.8	6.01	34.4	6.07
	21	22.4	4.12	24.6	4.76	26.9	5.46	29.1	6.25	30.3	6.60	30.9	6.65	32.1	6.76	32.7	6.82
	23	22.4	4.44	24.6	5.12	26.9	5.89	29.1	6.76	29.8	6.85	30.4	6.90	31.6	7.02	32.2	7.07
	25	22.4	4.77	24.6	5.52	26.9	6.36	28.6	7.04	29.2	7.09	29.8	7.15	31.0	7.27	31.6	7.33
	27	22.4	5.13	24.6	5.95	26.9	6.86	28.1	7.29	28.7	7.34	29.3	7.40	30.4	7.53	31.0	7.60
	30	22.4	5.73	24.6	6.65	26.7	7.63	27.2	7.70	27.8	7.76	28.3	7.83	29.5	7.97	30.0	8.04
	33	22.4	6.42	24.6	7.57	25.8	8.07	26.3	8.14	26.9	8.20	27.4	8.27	28.5	8.41	29.1	8.48
	35	22.4	7.00	24.6	8.29	25.2	8.36	25.7	8.43	26.2	8.50	26.8	8.57	27.9	8.71	28.4	8.77
	37	22.4	7.65	24.0	8.59	24.6	8.66	25.1	8.72	25.6	8.79	26.1	8.86	27.2	9.00	27.8	9.07
	40	22.4	8.78	23.1	9.03	23.6	9.10	24.1	9.17	24.7	9.23	25.2	9.30	26.2	9.44	26.8	9.51
	43	21.7	9.40	22.2	9.47	22.7	9.54	23.2	9.61	23.7	9.67	24.2	9.74	25.2	9.88	25.8	9.95
29.1 (130%)	10	20.8	3.08	22.9	3.32	25.0	3.57	27.0	3.81	29.1	4.06	31.2	4.55	34.4	5.34	35.0	5.39
	15	20.8	3.08	22.9	3.39	25.0	3.86	27.0	4.37	29.1	4.95	31.2	5.58	33.1	5.96	33.7	6.01
	21	20.8	3.71	22.9	4.25	25.0	4.85	27.0	5.52	29.1	6.25	30.3	6.60	31.5	6.70	32.1	6.76
	23	20.8	3.99	22.9	4.58	25.0	5.23	27.0	5.95	29.1	6.76	29.8	6.85	30.9	6.95	31.5	7.01
	25	20.8	4.29	22.9	4.93	25.0	5.63	27.0	6.42	28.7	7.04	29.2	7.09	30.4	7.21	31.0	7.26
	27	20.8	4.61	22.9	5.30	25.0	6.07	27.0	6.93	28.1	7.29	28.7	7.34	29.8	7.46	30.4	7.53
	30	20.8	5.13	22.9	5.92	25.0	6.79	26.7	7.63	27.3	7.70	27.8	7.77	28.9	7.90	29.5	7.97
	33	20.8	5.71	22.9	6.65	25.0	7.75	25.8	8.08	26.4	8.14	26.9	8.21	28.0	8.34	28.5	8.41
	35	20.8	6.19	22.9	7.26	24.7	8.31	25.2	8.37	25.8	8.44	26.3	8.51	27.4	8.64	27.9	8.71
	37	20.8	6.75	22.9	7.94	24.1	8.60	24.6	8.67	25.2	8.73	25.7	8.80	26.7	8.94	27.2	9.00
	40	20.8	7.70	22.7	8.98	23.2	9.04	23.7	9.11	24.2	9.18	24.7	9.24	25.8	9.38	26.3	9.45
	43	20.8	8.84	21.8	9.42	22.3	9.49	22.8	9.55	23.3	9.62	23.8	9.69	24.8	9.82	25.3	9.89
26.9 (120%)	10	19.2	2.89	21.1	3.11	23.0	3.34	25.0	3.57	26.9	3.80	28.8	4.02	32.6	4.94	34.1	5.32
	15	19.2	2.89	21.1	3.11	23.0	3.42	25.0	3.86	26.9	4.33	28.8	4.85	32.3	5.89	32.9	5.94
	21	19.2	3.33	21.1	3.79	23.0	4.30	25.0	4.85	26.9	5.46	28.8	6.14	30.7	6.64	31.3	6.69
	23	19.2	3.58	21.1	4.08	23.0	4.63	25.0	5.23	26.9	5.89	28.8	6.63	30.2	6.89	30.8	6.94
	25	19.2	3.85	21.1	4.38	23.0	4.98	25.0	5.63	26.9	6.36	28.6	7.03	29.7	7.14	30.3	7.19
	27	19.2	4.13	21.1	4.71	23.0	5.36	25.0	6.07	26.9	6.86	28.1	7.28	29.2	7.39	29.7	7.45
	30	19.2	4.58	21.1	5.25	23.0	5.98	25.0	6.79	26.7	7.63	27.2	7.69	28.3	7.83	28.8	7.89
	33	19.2	5.09	21.1	5.85	23.0	6.73	25.0	7.75	25.8	8.07	26.3	8.14	27.4	8.27	27.9	8.34
	35	19.2	5.47	21.1	6.35	23.0	7.35	24.7	8.31	25.2	8.37	25.7	8.44	26.8	8.57	27.3	8.63
	37	19.2	5.94	21.1	6.92	23.0	8.04	24.1	8.60	24.6	8.67	25.1	8.73	26.2	8.86	26.7	8.93
	40	19.2	6.75	21.1	7.91	22.8	8.98	23.3	9.05	23.7	9.11	24.2	9.18	25.2	9.31	25.7	9.38
	43	19.2	7.70	21.1	9.09	21.9	9.43	22.3	9.49	22.8	9.56	23.3	9.62	24.3	9.76	24.8	9.82
24.6 (110%)	10	17.6	2.70	19.4	2.91	21.1	3.11	22.9	3.32	24.6	3.53	26.4	3.74	29.9	4.23	31.7	4.68
	15	17.6	2.70	19.4	2.91	21.1	3.11	22.9	3.39	24.6	3.78	26.4	4.21	29.9	5.18	31.7	5.74
	21	17.6	2.99	19.4	3.37	21.1	3.79	22.9	4.25	24.6	4.76	26.4	5.30	29.9	6.56	30.5	6.61
	23	17.6	3.20	19.4	3.62	21.1	4.08	22.9	4.58	24.6	5.12	26.4	5.72	29.4	6.81	30.0	6.87
	25	17.6	3.43	19.4	3.89	21.1	4.38	22.9	4.93	24.6	5.52	26.4	6.17	28.9	7.07	29.5	7.12
	27	17.6	3.68	19.4	4.17	21.1	4.71	22.9	5.30	24.6	5.95	26.4	6.66	28.4	7.32	29.0	7.37
	30	17.6	4.08	19.4	4.64	21.1	5.25	22.9	5.92	24.6	6.65	26.4	7.50	27.6	7.74	28.1	7.80
	33	17.6	4.52	19.4	5.15	21.1	5.85	22.9	6.65	24.6	7.57	25.7	8.06	26.7	8.19	27.2	8.25
	35	17.6	4.85	19.4	5.54	21.1	6.35	22.9	7.26	24.6	8.29	25.1	8.36	26.1	8.49	26.6	8.55
	37	17.6	5.22	19.4	6.02	21.1	6.92	22.9	7.94	24.1	8.59	24.6	8.66	25.6	8.79	26.0	8.85
	40	17.6	5.91	19.4	6.84	21.1	7.91	22.7	8.98	23.2	9.04	23.7	9.11	24.7	9.23	25.1	9.30
	43	17.6	6.70	19.4	7.81	21.1	9.09	21.9	9.43	22.3	9.49	22.8	9.55	23.7	9.68	24.2	9.75

TC : Total Capacity kW.

PI : Power Input kW (Compressor + Outdoor fan motor).

The data is based on the following conditions. Pipe length : 7.5 m; Height difference : 0 m.

MODEL SELECTION

■ MODEL : AJ*A72L

• CAPACITY : 22.4kW (8HP)

Total rated cooling capacity of indoor unit	Outdoor temperature	Indoor temperature															
		20℃CDB / 15℃CWB		23℃CDB / 16℃CWB		24℃CDB / 17℃CWB		26℃CDB / 18℃CWB		27℃CDB / 19℃CWB		28℃CDB / 20℃CWB		30℃CDB / 22℃CWB		32℃CDB / 23℃CWB	
	(℃DB)	TC	PI	TC	PI	TC	PI	TC	PI	TC	PI	TC	PI	TC	PI	TC	PI
22.4 (100%)	10	16.0	2.51	17.6	2.70	19.2	2.89	20.8	3.08	22.4	3.27	24.0	3.46	27.2	3.83	28.8	4.02
	15	16.0	2.51	17.6	2.70	19.2	2.89	20.8	3.08	22.4	3.29	24.0	3.63	27.2	4.41	28.8	4.85
	21	16.0	2.66	17.6	2.99	19.2	3.33	20.8	3.71	22.4	4.12	24.0	4.57	27.2	5.57	28.8	6.14
	23	16.0	2.85	17.6	3.20	19.2	3.58	20.8	3.99	22.4	4.44	24.0	4.92	27.2	6.01	28.8	6.63
	25	16.0	3.06	17.6	3.43	19.2	3.85	20.8	4.29	22.4	4.77	24.0	5.30	27.2	6.49	28.6	7.03
	27	16.0	3.27	17.6	3.68	19.2	4.13	20.8	4.61	22.4	5.13	24.0	5.71	27.2	7.00	28.1	7.29
	30	16.0	3.62	17.6	4.08	19.2	4.58	20.8	5.13	22.4	5.73	24.0	6.38	26.8	7.64	27.3	7.70
	33	16.0	4.00	17.6	4.52	19.2	5.09	20.8	5.71	22.4	6.42	24.0	7.22	26.0	8.09	26.5	8.16
	35	16.0	4.28	17.6	4.85	19.2	5.47	20.8	6.19	22.4	7.00	24.0	7.90	25.4	8.39	25.9	8.46
	37	16.0	4.58	17.6	5.22	19.2	5.94	20.8	6.75	22.4	7.65	23.9	8.57	24.9	8.69	25.3	8.76
	40	16.0	5.15	17.6	5.91	19.2	6.75	20.8	7.70	22.4	8.78	23.1	9.02	24.0	9.15	24.5	9.21
	43	16.0	5.82	17.6	6.70	19.2	7.70	20.8	8.84	21.7	9.41	22.2	9.47	23.1	9.60	23.6	9.66
20.2 (90%)	10	14.4	2.32	15.8	2.49	17.3	2.66	18.7	2.83	20.2	3.00	21.6	3.17	24.5	3.51	25.9	3.68
	15	14.4	2.32	15.8	2.49	17.3	2.66	18.7	2.83	20.2	3.00	21.6	3.17	24.5	3.74	25.9	4.09
	21	14.4	2.37	15.8	2.63	17.3	2.92	18.7	3.23	20.2	3.56	21.6	3.91	24.5	4.71	25.9	5.15
	23	14.4	2.53	15.8	2.82	17.3	3.13	18.7	3.47	20.2	3.82	21.6	4.21	24.5	5.07	25.9	5.55
	25	14.4	2.71	15.8	3.02	17.3	3.36	18.7	3.72	20.2	4.11	21.6	4.53	24.5	5.46	25.9	5.99
	27	14.4	2.89	15.8	3.23	17.3	3.60	18.7	3.99	20.2	4.41	21.6	4.87	24.5	5.89	25.9	6.46
	30	14.4	3.19	15.8	3.57	17.3	3.99	18.7	4.43	20.2	4.91	21.6	5.42	24.5	6.58	25.9	7.25
	33	14.4	3.52	15.8	3.95	17.3	4.42	18.7	4.92	20.2	5.46	21.6	6.05	24.5	7.48	25.6	8.05
	35	14.4	3.76	15.8	4.23	17.3	4.73	18.7	5.28	20.2	5.89	21.6	6.59	24.5	8.19	25.1	8.35
	37	14.4	4.01	15.8	4.52	17.3	5.08	18.7	5.72	20.2	6.42	21.6	7.19	24.1	8.59	24.5	8.65
	40	14.4	4.47	15.8	5.08	17.3	5.75	18.7	6.49	20.2	7.31	21.6	8.22	23.2	9.05	23.7	9.11
	43	14.4	5.02	15.8	5.73	17.3	6.52	18.7	7.39	20.2	8.37	21.5	9.38	22.4	9.50	22.8	9.56
17.9 (80%)	10	12.8	2.13	14.1	2.28	15.4	2.43	16.6	2.59	17.9	2.74	19.2	2.89	21.8	3.19	23.0	3.34
	15	12.8	2.13	14.1	2.28	15.4	2.43	16.6	2.59	17.9	2.74	19.2	2.89	21.8	3.19	23.0	3.42
	21	12.8	2.18	14.1	2.33	15.4	2.54	16.6	2.79	17.9	3.05	19.2	3.33	21.8	3.96	23.0	4.30
	23	12.8	2.27	14.1	2.47	15.4	2.72	16.6	2.99	17.9	3.28	19.2	3.58	21.8	4.26	23.0	4.63
	25	12.8	2.39	14.1	2.64	15.4	2.91	16.6	3.20	17.9	3.51	19.2	3.85	21.8	4.58	23.0	4.98
	27	12.8	2.54	14.1	2.82	15.4	3.12	16.6	3.43	17.9	3.77	19.2	4.13	21.8	4.92	23.0	5.36
	30	12.8	2.80	14.1	3.11	15.4	3.44	16.6	3.80	17.9	4.18	19.2	4.58	21.8	5.48	23.0	5.98
	33	12.8	3.08	14.1	3.43	15.4	3.80	16.6	4.21	17.9	4.63	19.2	5.09	21.8	6.12	23.0	6.73
	35	12.8	3.28	14.1	3.66	15.4	4.07	16.6	4.50	17.9	4.97	19.2	5.47	21.8	6.67	23.0	7.35
	37	12.8	3.50	14.1	3.91	15.4	4.35	16.6	4.82	17.9	5.36	19.2	5.94	21.8	7.28	23.0	8.04
	40	12.8	3.85	14.1	4.34	15.4	4.87	16.6	5.44	17.9	6.07	19.2	6.75	21.8	8.33	22.8	8.99
	43	12.8	4.31	14.1	4.87	15.4	5.49	16.6	6.16	17.9	6.89	19.2	7.70	21.6	9.39	22.0	9.45
15.7 (70%)	10	11.2	1.94	12.3	2.08	13.4	2.21	14.6	2.34	15.7	2.47	16.8	2.60	19.0	2.87	20.2	3.00
	15	11.2	1.94	12.3	2.08	13.4	2.21	14.6	2.34	15.7	2.47	16.8	2.60	19.0	2.87	20.2	3.00
	21	11.2	1.98	12.3	2.12	13.4	2.25	14.6	2.40	15.7	2.60	16.8	2.82	19.0	3.30	20.2	3.56
	23	11.2	2.06	12.3	2.21	13.4	2.35	14.6	2.56	15.7	2.79	16.8	3.03	19.0	3.54	20.2	3.82
	25	11.2	2.15	12.3	2.30	13.4	2.51	14.6	2.74	15.7	2.98	16.8	3.24	19.0	3.80	20.2	4.11
	27	11.2	2.23	12.3	2.44	13.4	2.68	14.6	2.93	15.7	3.19	16.8	3.47	19.0	4.08	20.2	4.41
	30	11.2	2.44	12.3	2.69	13.4	2.95	14.6	3.23	15.7	3.53	16.8	3.85	19.0	4.53	20.2	4.91
	33	11.2	2.67	12.3	2.95	13.4	3.25	14.6	3.57	15.7	3.90	16.8	4.26	19.0	5.03	20.2	5.46
	35	11.2	2.84	12.3	3.14	13.4	3.47	14.6	3.81	15.7	4.17	16.8	4.56	19.0	5.40	20.2	5.89
	37	11.2	3.02	12.3	3.35	13.4	3.70	14.6	4.07	15.7	4.46	16.8	4.89	19.0	5.87	20.2	6.42
	40	11.2	3.31	12.3	3.68	13.4	4.09	14.6	4.53	15.7	5.01	16.8	5.52	19.0	6.66	20.2	7.31
	43	11.2	3.67	12.3	4.11	13.4	4.59	14.6	5.10	15.7	5.65	16.8	6.25	19.0	7.60	20.2	8.37
13.4 (60%)	10	9.60	1.75	10.6	1.87	11.5	1.98	12.5	2.09	13.4	2.21	14.4	2.32	16.3	2.55	17.3	2.66
	15	9.60	1.75	10.6	1.87	11.5	1.98	12.5	2.09	13.4	2.21	14.4	2.32	16.3	2.55	17.3	2.66
	21	9.60	1.79	10.6	1.90	11.5	2.02	12.5	2.14	13.4	2.25	14.4	2.37	16.3	2.73	17.3	2.92
	23	9.60	1.86	10.6	1.98	11.5	2.10	12.5	2.23	13.4	2.35	14.4	2.53	16.3	2.92	17.3	3.13
	25	9.60	1.93	10.6	2.06	11.5	2.19	12.5	2.32	13.4	2.51	14.4	2.71	16.3	3.13	17.3	3.36
	27	9.60	2.00	10.6	2.14	11.5	2.29	12.5	2.48	13.4	2.68	14.4	2.89	16.3	3.35	17.3	3.60
	30	9.60	2.12	10.6	2.30	11.5	2.51	12.5	2.72	13.4	2.95	14.4	3.19	16.3	3.71	17.3	3.99
	33	9.60	2.30	10.6	2.52	11.5	2.75	12.5	2.99	13.4	3.25	14.4	3.52	16.3	4.10	17.3	4.42
	35	9.60	2.44	10.6	2.68	11.5	2.93	12.5	3.19	13.4	3.47	14.4	3.76	16.3	4.39	17.3	4.73
	37	9.60	2.58	10.6	2.84	11.5	3.11	12.5	3.40	13.4	3.70	14.4	4.01	16.3	4.70	17.3	5.08
	40	9.60	2.82	10.6	3.11	11.5	3.42	12.5	3.74	13.4	4.09	14.4	4.47	16.3	5.29	17.3	5.75
	43	9.60	3.10	10.6	3.43	11.5	3.80	12.5	4.18	13.4	4.59	14.4	5.02	16.3	5.98	17.3	6.52
11.2 (50%)	10	8.00	1.57	8.80	1.66	9.60	1.75	10.4	1.85	11.2	1.94	12.0	2.04	13.6	2.23	14.4	2.32
	15	8.00	1.57	8.80	1.66	9.60	1.75	10.4	1.85	11.2	1.94	12.0	2.04	13.6	2.23	14.4	2.32
	21	8.00	1.59	8.80	1.69	9.60	1.79	10.4	1.88	11.2	1.98	12.0	2.08	13.6	2.27	14.4	2.37
	23	8.00	1.65	8.80	1.75	9.60	1.86	10.4	1.96	11.2	2.06	12.0	2.17	13.6	2.38	14.4	2.53
	25	8.00	1.71	8.80	1.82	9.60	1.93	10.4	2.04	11.2	2.15	12.0	2.25	13.6	2.54	14.4	2.71
	27	8.00	1.77	8.80	1.89	9.60	2.00	10.4	2.12	11.2	2.23	12.0	2.38	13.6	2.71	14.4	2.89
	30	8.00	1.87	8.80	1.99	9.60	2.12	10.4	2.27	11.2	2.44	12.0	2.61	13.6	2.99	14.4	3.19
	33	8.00	1.97	8.80	2.12	9.60	2.30	10.4	2.48	11.2	2.67	12.0	2.87	13.6	3.30	14.4	3.52
	35	8.00	2.06	8.80	2.25	9.60	2.44	10.4	2.63	11.2	2.84	12.0	3.06	13.6	3.51	14.4	3.76
	37	8.00	2.18	8.80	2.38	9.60	2.58	10.4	2.80	11.2	3.02	12.0	3.25	13.6	3.75	14.4	4.01
	40	8.00	2.37	8.80	2.59	9.60	2.82	10.4	3.06	11.2	3.31	12.0	3.58	13.6	4.15	14.4	4.47
	43	8.00	2.58	8.80	2.83	9.60	3.10	10.4	3.38	11.2	3.67	12.0	3.98	13.6	4.66	14.4	5.02

TC : Total Capacity kW.

PI : Power Input kW (Compressor + Outdoor fan motor).

The data is based on the following conditions. Pipe length : 7.5 m; Height difference : 0 m.

MODEL SELECTION

■ MODEL : AJ*A90L

• CAPACITY : 28.0kW (10HP)

Total rated cooling capacity of indoor unit	Outdoor temperature	Indoor temperature															
		20℃CDB / 15℃CWB		23℃CDB / 16℃CWB		24℃CDB / 17℃CWB		26℃CDB / 18℃CWB		27℃CDB / 19℃CWB		28℃CDB / 20℃CWB		30℃CDB / 22℃CWB		32℃CDB / 23℃CWB	
	(℃DB)	TC	PI	TC	PI	TC	PI	TC	PI	TC	PI	TC	PI	TC	PI	TC	PI
42.0 (150%)	10	30.0	4.23	33.0	4.59	36.0	4.96	39.0	5.62	42.0	6.46	43.1	6.64	44.8	6.76	45.7	6.83
	15	30.0	4.45	33.0	5.18	36.0	6.01	39.0	6.93	40.6	7.36	41.5	7.42	43.1	7.55	43.9	7.62
	21	30.0	5.64	33.0	6.58	36.0	7.64	37.8	8.23	38.6	8.30	39.4	8.37	40.9	8.51	41.7	8.59
	23	30.0	6.09	33.0	7.11	36.0	8.27	37.1	8.54	37.9	8.61	38.7	8.69	40.2	8.84	41.0	8.91
	25	30.0	6.58	33.0	7.69	35.7	8.79	36.4	8.86	37.2	8.93	37.9	9.01	39.4	9.16	40.2	9.24
	27	30.0	7.10	33.0	8.31	35.0	9.10	35.7	9.18	36.5	9.25	37.2	9.33	38.7	9.50	39.4	9.59
	30	30.0	7.95	33.0	9.39	33.9	9.62	34.6	9.71	35.3	9.80	36.0	9.88	37.5	10.1	38.2	10.2
	33	30.0	9.03	32.1	10.1	32.8	10.2	33.4	10.3	34.1	10.4	34.8	10.4	36.2	10.6	36.9	10.7
	35	30.0	9.90	31.3	10.5	32.0	10.6	32.6	10.6	33.3	10.7	34.0	10.8	35.4	11.0	36.1	11.1
	37	29.9	10.8	30.5	10.8	31.2	10.9	31.8	11.0	32.5	11.1	33.2	11.2	34.6	11.4	35.3	11.5
	40	28.7	11.3	29.3	11.4	30.0	11.5	30.6	11.6	31.3	11.7	32.0	11.8	33.3	11.9	34.0	12.0
	43	27.5	11.9	28.1	12.0	28.8	12.1	29.4	12.1	30.1	12.2	30.7	12.3	32.0	12.5	32.7	12.6
39.2 (140%)	10	28.0	3.99	30.8	4.33	33.6	4.67	36.4	5.00	39.2	5.67	42.0	6.46	43.9	6.70	44.8	6.76
	15	28.0	4.01	30.8	4.64	33.6	5.34	36.4	6.12	39.2	7.00	40.7	7.36	42.3	7.49	43.1	7.55
	21	28.0	5.08	30.8	5.88	33.6	6.78	36.4	7.79	37.9	8.24	38.7	8.30	40.2	8.44	40.9	8.51
	23	28.0	5.48	30.8	6.35	33.6	7.33	36.4	8.44	37.2	8.55	38.0	8.62	39.5	8.77	40.2	8.84
	25	28.0	5.91	30.8	6.86	33.6	7.93	35.8	8.80	36.5	8.87	37.3	8.94	38.7	9.09	39.5	9.16
	27	28.0	6.37	30.8	7.40	33.6	8.57	35.1	9.11	35.9	9.19	36.6	9.26	38.0	9.42	38.7	9.51
	30	28.0	7.12	30.8	8.30	33.4	9.55	34.0	9.64	34.7	9.72	35.4	9.81	36.8	9.98	37.5	10.1
	33	28.0	8.00	30.8	9.48	32.2	10.1	32.9	10.2	33.6	10.3	34.3	10.4	35.6	10.6	36.3	10.6
	35	28.0	8.75	30.8	10.4	31.5	10.5	32.1	10.6	32.8	10.7	33.5	10.8	34.8	10.9	35.5	11.0
	37	28.0	9.58	30.0	10.8	30.7	10.9	31.3	11.0	32.0	11.0	32.7	11.1	34.0	11.3	34.7	11.4
	40	28.0	11.0	28.9	11.3	29.5	11.4	30.2	11.5	30.8	11.6	31.5	11.7	32.8	11.9	33.4	12.0
	43	27.1	11.8	27.7	11.9	28.3	12.0	29.0	12.1	29.6	12.2	30.2	12.3	31.5	12.4	32.2	12.5
36.4 (130%)	10	26.0	3.75	28.6	4.06	31.2	4.38	33.8	4.69	36.4	5.00	39.0	5.62	43.0	6.63	43.8	6.69
	15	26.0	3.75	28.6	4.14	31.2	4.74	33.8	5.39	36.4	6.12	39.0	6.93	41.4	7.41	42.1	7.48
	21	26.0	4.56	28.6	5.24	31.2	6.01	33.8	6.85	36.4	7.79	37.9	8.23	39.4	8.37	40.1	8.44
	23	26.0	4.91	28.6	5.66	31.2	6.49	33.8	7.41	36.4	8.44	37.2	8.55	38.7	8.69	39.4	8.76
	25	26.0	5.29	28.6	6.10	31.2	7.01	33.8	8.01	35.8	8.80	36.5	8.87	38.0	9.01	38.7	9.08
	27	26.0	5.70	28.6	6.58	31.2	7.56	33.8	8.66	35.2	9.12	35.9	9.19	37.3	9.33	38.0	9.42
	30	26.0	6.37	28.6	7.37	31.2	8.49	33.4	9.56	34.1	9.64	34.8	9.73	36.1	9.90	36.8	9.98
	33	26.0	7.11	28.6	8.30	31.2	9.70	32.3	10.1	33.0	10.2	33.6	10.3	35.0	10.5	35.6	10.6
	35	26.0	7.72	28.6	9.08	30.9	10.4	31.6	10.5	32.2	10.6	32.9	10.7	34.2	10.8	34.9	10.9
	37	26.0	8.43	28.6	9.95	30.2	10.8	30.8	10.9	31.4	11.0	32.1	11.1	33.4	11.2	34.1	11.3
	40	26.0	9.65	28.4	11.3	29.0	11.4	29.6	11.4	30.3	11.5	30.9	11.6	32.2	11.8	32.8	11.9
	43	26.0	11.1	27.3	11.8	27.9	11.9	28.5	12.0	29.1	12.1	29.7	12.2	31.0	12.4	31.6	12.4
33.6 (120%)	10	24.0	3.51	26.4	3.80	28.8	4.09	31.2	4.38	33.6	4.67	36.0	4.96	40.8	6.11	42.7	6.60
	15	24.0	3.51	26.4	3.80	28.8	4.19	31.2	4.74	33.6	5.34	36.0	6.01	40.4	7.33	41.1	7.39
	21	24.0	4.08	26.4	4.66	28.8	5.30	31.2	6.01	33.6	6.78	36.0	7.64	38.4	8.28	39.2	8.35
	23	24.0	4.39	26.4	5.02	28.8	5.72	31.2	6.49	33.6	7.33	36.0	8.27	37.8	8.60	38.5	8.67
	25	24.0	4.73	26.4	5.41	28.8	6.17	31.2	7.01	33.6	7.93	35.7	8.79	37.1	8.93	37.8	9.00
	27	24.0	5.08	26.4	5.83	28.8	6.65	31.2	7.56	33.6	8.57	35.1	9.11	36.5	9.25	37.1	9.32
	30	24.0	5.67	26.4	6.51	28.8	7.45	31.2	8.49	33.4	9.55	34.0	9.63	35.4	9.80	36.0	9.88
	33	24.0	6.32	26.4	7.28	28.8	8.40	31.2	9.70	32.3	10.1	32.9	10.2	34.2	10.4	34.9	10.5
	35	24.0	6.80	26.4	7.92	28.8	9.19	30.9	10.4	31.5	10.5	32.2	10.6	33.5	10.8	34.1	10.8
	37	24.0	7.40	26.4	8.65	28.8	10.1	30.2	10.8	30.8	10.9	31.4	11.0	32.7	11.1	33.4	11.2
	40	24.0	8.44	26.4	9.91	28.4	11.3	29.1	11.4	29.7	11.5	30.3	11.5	31.5	11.7	32.2	11.8
	43	24.0	9.65	26.4	11.4	27.3	11.9	27.9	11.9	28.5	12.0	29.1	12.1	30.4	12.3	31.0	12.4
30.8 (110%)	10	22.0	3.27	24.2	3.53	26.4	3.80	28.6	4.06	30.8	4.33	33.0	4.59	37.4	5.21	39.6	5.78
	15	22.0	3.27	24.2	3.53	26.4	3.80	28.6	4.14	30.8	4.64	33.0	5.18	37.4	6.42	39.6	7.13
	21	22.0	3.63	24.2	4.12	26.4	4.66	28.6	5.24	30.8	5.88	33.0	6.58	37.4	8.18	38.1	8.26
	23	22.0	3.91	24.2	4.44	26.4	5.02	28.6	5.66	30.8	6.35	33.0	7.11	36.8	8.51	37.5	8.58
	25	22.0	4.20	24.2	4.78	26.4	5.41	28.6	6.10	30.8	6.86	33.0	7.69	36.2	8.83	36.8	8.90
	27	22.0	4.52	24.2	5.14	26.4	5.83	28.6	6.58	30.8	7.40	33.0	8.31	35.5	9.15	36.2	9.22
	30	22.0	5.03	24.2	5.74	26.4	6.51	28.6	7.37	30.8	8.30	33.0	9.39	34.5	9.69	35.1	9.77
	33	22.0	5.59	24.2	6.39	26.4	7.28	28.6	8.30	30.8	9.48	32.1	10.1	33.4	10.3	34.0	10.3
	35	22.0	6.01	24.2	6.88	26.4	7.92	28.6	9.08	30.8	10.4	31.4	10.5	32.7	10.6	33.3	10.7
	37	22.0	6.48	24.2	7.50	26.4	8.65	28.6	9.95	30.1	10.8	30.7	10.9	31.9	11.0	32.6	11.1
	40	22.0	7.36	24.2	8.55	26.4	9.91	28.4	11.3	29.0	11.4	29.6	11.4	30.8	11.6	31.4	11.7
	43	22.0	8.38	24.2	9.79	26.4	11.4	27.3	11.9	27.9	11.9	28.5	12.0	29.7	12.2	30.3	12.3

TC : Total Capacity kW.

PI : Power Input kW (Compressor + Outdoor fan motor).

The data is based on the following conditions. Pipe length : 7.5 m; Height difference : 0 m.

MODEL SELECTION

■ MODEL : AJ*A90L

• CAPACITY : 28.0kW (10HP)

Total rated cooling capacity of indoor unit	Outdoor temperature	Indoor temperature															
		20℃CDB / 15℃CWB		23℃CDB / 16℃CWB		24℃CDB / 17℃CWB		26℃CDB / 18℃CWB		27℃CDB / 19℃CWB		28℃CDB / 20℃CWB		30℃CDB / 22℃CWB		32℃CDB / 23℃CWB	
	(℃DB)	TC	PI	TC	PI	TC	PI	TC	PI	TC	PI	TC	PI	TC	PI	TC	PI
28.0 (100%)	10	20.0	3.03	22.0	3.27	24.0	3.51	26.0	3.75	28.0	3.99	30.0	4.23	34.0	4.71	36.0	4.96
	15	20.0	3.03	22.0	3.27	24.0	3.51	26.0	3.75	28.0	4.01	30.0	4.45	34.0	5.45	36.0	6.01
	21	20.0	3.22	22.0	3.63	24.0	4.08	26.0	4.56	28.0	5.08	30.0	5.64	34.0	6.92	36.0	7.64
	23	20.0	3.46	22.0	3.91	24.0	4.39	26.0	4.91	28.0	5.48	30.0	6.09	34.0	7.48	36.0	8.27
	25	20.0	3.72	22.0	4.20	24.0	4.73	26.0	5.29	28.0	5.91	30.0	6.58	34.0	8.09	35.7	8.79
	27	20.0	4.00	22.0	4.52	24.0	5.08	26.0	5.70	28.0	6.37	30.0	7.10	34.0	8.75	35.1	9.11
	30	20.0	4.44	22.0	5.03	24.0	5.67	26.0	6.37	28.0	7.12	30.0	7.95	33.5	9.57	34.1	9.65
	33	20.0	4.93	22.0	5.59	24.0	6.32	26.0	7.11	28.0	8.00	30.0	9.03	32.5	10.1	33.1	10.2
	35	20.0	5.28	22.0	6.01	24.0	6.80	26.0	7.72	28.0	8.75	30.0	9.90	31.8	10.5	32.4	10.6
	37	20.0	5.66	22.0	6.48	24.0	7.40	26.0	8.43	28.0	9.58	29.9	10.8	31.1	10.9	31.7	11.0
	40	20.0	6.39	22.0	7.36	24.0	8.44	26.0	9.65	28.0	11.0	28.8	11.3	30.0	11.5	30.6	11.6
	43	20.0	7.24	22.0	8.38	24.0	9.65	26.0	11.1	27.2	11.8	27.7	11.9	28.9	12.1	29.5	12.1
25.2 (90%)	10	18.0	2.79	19.8	3.00	21.6	3.22	23.4	3.44	25.2	3.65	27.0	3.87	30.6	4.30	32.4	4.52
	15	18.0	2.79	19.8	3.00	21.6	3.22	23.4	3.44	25.2	3.65	27.0	3.87	30.6	4.59	32.4	5.03
	21	18.0	2.85	19.8	3.18	21.6	3.55	23.4	3.94	25.2	4.36	27.0	4.81	30.6	5.82	32.4	6.39
	23	18.0	3.05	19.8	3.42	21.6	3.82	23.4	4.24	25.2	4.70	27.0	5.19	30.6	6.29	32.4	6.90
	25	18.0	3.28	19.8	3.68	21.6	4.10	23.4	4.57	25.2	5.06	27.0	5.60	30.6	6.79	32.4	7.46
	27	18.0	3.51	19.8	3.95	21.6	4.41	23.4	4.91	25.2	5.45	27.0	6.03	30.6	7.33	32.4	8.05
	30	18.0	3.90	19.8	4.38	21.6	4.91	23.4	5.47	25.2	6.08	27.0	6.74	30.6	8.22	32.4	9.07
	33	18.0	4.32	19.8	4.86	21.6	5.46	23.4	6.09	25.2	6.79	27.0	7.53	30.6	9.36	32.0	10.1
	35	18.0	4.62	19.8	5.21	21.6	5.86	23.4	6.55	25.2	7.34	27.0	8.22	30.6	10.3	31.3	10.5
	37	18.0	4.94	19.8	5.59	21.6	6.31	23.4	7.12	25.2	8.01	27.0	8.99	30.1	10.8	30.6	10.9
	40	18.0	5.52	19.8	6.30	21.6	7.15	23.4	8.10	25.2	9.15	27.0	10.3	29.0	11.4	29.6	11.4
	43	18.0	6.23	19.8	7.14	21.6	8.14	23.4	9.25	25.2	10.5	26.9	11.8	28.0	11.9	28.5	12.0
22.4 (80%)	10	16.0	2.55	17.6	2.74	19.2	2.93	20.8	3.12	22.4	3.32	24.0	3.51	27.2	3.90	28.8	4.09
	15	16.0	2.55	17.6	2.74	19.2	2.93	20.8	3.12	22.4	3.32	24.0	3.51	27.2	3.90	28.8	4.19
	21	16.0	2.60	17.6	2.80	19.2	3.07	20.8	3.38	22.4	3.72	24.0	4.08	27.2	4.86	28.8	5.30
	23	16.0	2.72	17.6	2.98	19.2	3.30	20.8	3.64	22.4	4.00	24.0	4.39	27.2	5.25	28.8	5.72
	25	16.0	2.87	17.6	3.19	19.2	3.54	20.8	3.91	22.4	4.31	24.0	4.73	27.2	5.66	28.8	6.17
	27	16.0	3.07	17.6	3.42	19.2	3.80	20.8	4.20	22.4	4.63	24.0	5.09	27.2	6.10	28.8	6.65
	30	16.0	3.40	17.6	3.79	19.2	4.22	20.8	4.67	22.4	5.15	24.0	5.67	27.2	6.81	28.8	7.45
	33	16.0	3.75	17.6	4.20	19.2	4.68	20.8	5.19	22.4	5.73	24.0	6.32	27.2	7.62	28.8	8.40
	35	16.0	4.01	17.6	4.49	19.2	5.01	20.8	5.56	22.4	6.16	24.0	6.80	27.2	8.33	28.8	9.19
	37	16.0	4.28	17.6	4.81	19.2	5.37	20.8	5.97	22.4	6.66	24.0	7.40	27.2	9.10	28.8	10.1
	40	16.0	4.74	17.6	5.36	19.2	6.03	20.8	6.76	22.4	7.56	24.0	8.44	27.2	10.5	28.5	11.3
	43	16.0	5.33	17.6	6.04	19.2	6.82	20.8	7.68	22.4	8.62	24.0	9.65	27.0	11.8	27.5	11.9
19.6 (70%)	10	14.0	2.31	15.4	2.47	16.8	2.64	18.2	2.81	19.6	2.98	21.0	3.15	23.8	3.49	25.2	3.65
	15	14.0	2.31	15.4	2.47	16.8	2.64	18.2	2.81	19.6	2.98	21.0	3.15	23.8	3.49	25.2	3.65
	21	14.0	2.36	15.4	2.53	16.8	2.70	18.2	2.88	19.6	3.14	21.0	3.42	23.8	4.03	25.2	4.36
	23	14.0	2.46	15.4	2.64	16.8	2.83	18.2	3.09	19.6	3.38	21.0	3.68	23.8	4.34	25.2	4.70
	25	14.0	2.56	15.4	2.76	16.8	3.03	18.2	3.32	19.6	3.63	21.0	3.96	23.8	4.67	25.2	5.06
	27	14.0	2.67	15.4	2.94	16.8	3.24	18.2	3.56	19.6	3.90	21.0	4.25	23.8	5.03	25.2	5.45
	30	14.0	2.94	15.4	3.25	16.8	3.59	18.2	3.95	19.6	4.33	21.0	4.73	23.8	5.60	25.2	6.08
	33	14.0	3.23	15.4	3.59	16.8	3.97	18.2	4.37	19.6	4.80	21.0	5.25	23.8	6.24	25.2	6.79
	35	14.0	3.45	15.4	3.84	16.8	4.25	18.2	4.68	19.6	5.15	21.0	5.64	23.8	6.71	25.2	7.34
	37	14.0	3.68	15.4	4.10	16.8	4.54	18.2	5.01	19.6	5.52	21.0	6.05	23.8	7.31	25.2	8.01
	40	14.0	4.05	15.4	4.52	16.8	5.04	18.2	5.60	19.6	6.21	21.0	6.86	23.8	8.32	25.2	9.15
	43	14.0	4.51	15.4	5.07	16.8	5.68	18.2	6.33	19.6	7.03	21.0	7.79	23.8	9.52	25.2	10.5
16.8 (60%)	10	12.0	2.07	13.2	2.21	14.4	2.35	15.6	2.50	16.8	2.64	18.0	2.79	20.4	3.08	21.6	3.22
	15	12.0	2.07	13.2	2.21	14.4	2.35	15.6	2.50	16.8	2.64	18.0	2.79	20.4	3.08	21.6	3.22
	21	12.0	2.11	13.2	2.26	14.4	2.41	15.6	2.55	16.8	2.70	18.0	2.85	20.4	3.30	21.6	3.55
	23	12.0	2.20	13.2	2.35	14.4	2.51	15.6	2.67	16.8	2.83	18.0	3.05	20.4	3.55	21.6	3.82
	25	12.0	2.29	13.2	2.45	14.4	2.62	15.6	2.79	16.8	3.03	18.0	3.28	20.4	3.82	21.6	4.10
	27	12.0	2.38	13.2	2.56	14.4	2.74	15.6	2.99	16.8	3.24	18.0	3.51	20.4	4.10	21.6	4.41
	30	12.0	2.53	13.2	2.76	14.4	3.02	15.6	3.30	16.8	3.59	18.0	3.90	20.4	4.55	21.6	4.91
	33	12.0	2.76	13.2	3.04	14.4	3.33	15.6	3.65	16.8	3.97	18.0	4.32	20.4	5.06	21.6	5.46
	35	12.0	2.93	13.2	3.24	14.4	3.56	15.6	3.89	16.8	4.25	18.0	4.62	20.4	5.42	21.6	5.86
	37	12.0	3.12	13.2	3.45	14.4	3.80	15.6	4.16	16.8	4.54	18.0	4.94	20.4	5.82	21.6	6.31
	40	12.0	3.43	13.2	3.80	14.4	4.18	15.6	4.59	16.8	5.04	18.0	5.52	20.4	6.57	21.6	7.15
	43	12.0	3.77	13.2	4.21	14.4	4.67	15.6	5.16	16.8	5.68	18.0	6.23	20.4	7.46	21.6	8.14
14.0 (50%)	10	10.0	1.82	11.0	1.94	12.0	2.07	13.0	2.19	14.0	2.31	15.0	2.43	17.0	2.67	18.0	2.79
	15	10.0	1.82	11.0	1.94	12.0	2.07	13.0	2.19	14.0	2.31	15.0	2.43	17.0	2.67	18.0	2.79
	21	10.0	1.86	11.0	1.98	12.0	2.11	13.0	2.23	14.0	2.36	15.0	2.48	17.0	2.73	18.0	2.85
	23	10.0	1.93	11.0	2.06	12.0	2.20	13.0	2.33	14.0	2.46	15.0	2.59	17.0	2.86	18.0	3.05
	25	10.0	2.01	11.0	2.15	12.0	2.29	13.0	2.42	14.0	2.56	15.0	2.70	17.0	3.07	18.0	3.28
	27	10.0	2.09	11.0	2.23	12.0	2.38	13.0	2.53	14.0	2.67	15.0	2.86	17.0	3.29	18.0	3.51
	30	10.0	2.21	11.0	2.37	12.0	2.53	13.0	2.72	14.0	2.94	15.0	3.16	17.0	3.64	18.0	3.90
	33	10.0	2.34	11.0	2.53	12.0	2.76	13.0	2.99	14.0	3.23	15.0	3.49	17.0	4.03	18.0	4.32
	35	10.0	2.46	11.0	2.69	12.0	2.93	13.0	3.19	14.0	3.45	15.0	3.72	17.0	4.31	18.0	4.62
	37	10.0	2.61	11.0	2.86	12.0	3.12	13.0	3.39	14.0	3.68	15.0	3.97	17.0	4.61	18.0	4.94
	40	10.0	2.85	11.0	3.13	12.0	3.43	13.0	3.73	14.0	4.05	15.0	4.39	17.0	5.12	18.0	5.52
	43	10.0	3.12	11.0	3.43	12.0	3.77	13.0	4.13	14.0	4.51	15.0	4.91	17.0	5.77	18.0	6.23

TC : Total Capacity kW.

PI : Power Input kW (Compressor + Outdoor fan motor).

The data is based on the following conditions. Pipe length : 7.5 m; Height difference : 0 m.

MODEL SELECTION

■ MODEL : AJ*126L

• CAPACITY : 40.0kW (14HP)

Total rated cooling capacity of indoor unit	Outdoor temperature	Indoor temperature															
		20℃CDB / 15℃CWB		23℃CDB / 16℃CWB		24℃CDB / 17℃CWB		26℃CDB / 18℃CWB		27℃CDB / 19℃CWB		28℃CDB / 20℃CWB		30℃CDB / 22℃CWB		32℃CDB / 23℃CWB	
	(℃DB)	TC	PI	TC	PI	TC	PI	TC	PI	TC	PI	TC	PI	TC	PI	TC	PI
60.0 (150%)	10	42.9	6.32	47.1	6.88	51.4	7.44	55.7	8.39	60.0	9.68	61.7	10.0	64.1	10.2	65.3	10.3
	15	42.9	6.62	47.1	7.74	51.4	9.01	55.7	10.4	58.1	11.1	59.3	11.2	61.6	11.4	62.8	11.5
	21	42.9	8.47	47.1	9.92	51.4	11.6	54.1	12.5	55.2	12.6	56.3	12.7	58.5	12.9	59.6	13.0
	23	42.9	9.17	47.1	10.8	51.4	12.5	53.1	13.0	54.2	13.1	55.3	13.2	57.5	13.4	58.6	13.6
	25	42.9	9.92	47.1	11.6	51.0	13.4	52.1	13.5	53.2	13.6	54.2	13.7	56.4	13.9	57.5	14.1
	27	42.9	10.7	47.1	12.6	50.0	13.9	51.1	14.0	52.1	14.1	53.2	14.2	55.3	14.5	56.3	14.6
	30	42.9	12.1	47.1	14.3	48.5	14.7	49.5	14.8	50.5	14.9	51.5	15.1	53.5	15.4	54.6	15.5
	33	42.9	13.8	45.8	15.4	46.8	15.6	47.8	15.7	48.8	15.8	49.8	16.0	51.8	16.2	52.8	16.4
	35	42.9	15.1	44.7	16.0	45.7	16.1	46.6	16.3	47.6	16.4	48.6	16.5	50.6	16.8	51.6	17.0
	37	42.6	16.5	43.6	16.6	44.5	16.7	45.5	16.9	46.4	17.0	47.4	17.1	49.4	17.4	50.4	17.6
	40	40.9	17.3	41.9	17.5	42.8	17.6	43.7	17.7	44.7	17.9	45.6	18.0	47.5	18.3	48.5	18.4
	43	39.2	18.2	40.1	18.3	41.0	18.5	42.0	18.6	42.9	18.8	43.8	18.9	45.7	19.2	46.7	19.3
56.0 (140%)	10	40.0	5.94	44.0	6.47	48.0	6.99	52.0	7.51	56.0	8.47	60.0	9.68	62.9	10.1	64.0	10.2
	15	40.0	5.94	44.0	6.90	48.0	7.98	52.0	9.19	56.0	10.5	58.2	11.1	60.5	11.3	61.6	11.4
	21	40.0	7.59	44.0	8.84	48.0	10.2	52.0	11.8	54.2	12.5	55.3	12.6	57.5	12.8	58.6	12.9
	23	40.0	8.22	44.0	9.57	48.0	11.1	52.0	12.8	53.2	13.0	54.3	13.1	56.4	13.3	57.5	13.4
	25	40.0	8.89	44.0	10.4	48.0	12.0	51.2	13.4	52.2	13.5	53.3	13.6	55.4	13.8	56.5	14.0
	27	40.0	9.61	44.0	11.2	48.0	13.0	50.2	13.9	51.2	14.0	52.3	14.1	54.3	14.4	55.4	14.5
	30	40.0	10.8	44.0	12.6	47.7	14.6	48.7	14.7	49.6	14.8	50.6	15.0	52.6	15.2	53.7	15.4
	33	40.0	12.2	44.0	14.5	46.0	15.5	47.0	15.6	48.0	15.7	48.9	15.9	50.9	16.1	51.9	16.3
	35	40.0	13.3	44.0	15.9	44.9	16.0	45.9	16.2	46.8	16.3	47.8	16.4	49.8	16.7	50.7	16.8
	37	40.0	14.6	42.9	16.5	43.8	16.6	44.8	16.8	45.7	16.9	46.7	17.0	48.6	17.3	49.5	17.4
	40	40.0	16.9	41.2	17.4	42.1	17.5	43.1	17.6	44.0	17.8	44.9	17.9	46.8	18.2	47.7	18.3
	43	38.6	18.1	39.5	18.3	40.4	18.4	41.3	18.5	42.2	18.7	43.1	18.8	45.0	19.1	45.9	19.2
52.0 (130%)	10	37.1	5.57	40.9	6.06	44.6	6.54	48.3	7.03	52.0	7.51	55.7	8.39	61.5	9.98	62.6	10.1
	15	37.1	5.57	40.9	6.14	44.6	7.05	48.3	8.06	52.0	9.19	55.7	10.4	59.2	11.2	60.3	11.3
	21	37.1	6.79	40.9	7.85	44.6	9.03	48.3	10.3	52.0	11.8	54.2	12.5	56.3	12.7	57.3	12.8
	23	37.1	7.34	40.9	8.50	44.6	9.78	48.3	11.2	52.0	12.8	53.2	13.0	55.3	13.2	56.3	13.3
	25	37.1	7.94	40.9	9.19	44.6	10.6	48.3	12.1	51.2	13.4	52.2	13.5	54.3	13.7	55.3	13.8
	27	37.1	8.57	40.9	9.93	44.6	11.5	48.3	13.2	50.3	13.9	51.3	14.0	53.3	14.2	54.3	14.3
	30	37.1	9.61	40.9	11.2	44.6	12.9	47.8	14.6	48.7	14.7	49.7	14.8	51.6	15.1	52.6	15.2
	33	37.1	10.8	40.9	12.6	44.6	14.8	46.1	15.5	47.1	15.6	48.0	15.7	50.0	16.0	50.9	16.1
	35	37.1	11.7	40.9	13.9	44.1	15.9	45.1	16.1	46.0	16.2	46.9	16.3	48.8	16.6	49.8	16.7
	37	37.1	12.8	40.9	15.2	43.1	16.5	44.0	16.6	44.9	16.8	45.8	16.9	47.7	17.2	48.6	17.3
	40	37.1	14.8	40.5	17.3	41.4	17.4	42.3	17.5	43.2	17.7	44.1	17.8	46.0	18.1	46.9	18.2
	43	37.1	17.1	38.9	18.2	39.7	18.3	40.6	18.4	41.5	18.6	42.4	18.7	44.2	19.0	45.1	19.1
48.0 (120%)	10	34.3	5.20	37.7	5.64	41.1	6.09	44.6	6.54	48.0	6.99	51.4	7.44	58.3	9.15	61.1	9.95
	15	34.3	5.20	37.7	5.64	41.1	6.20	44.6	7.05	48.0	7.98	51.4	9.01	57.7	11.1	58.8	11.2
	21	34.3	6.05	37.7	6.94	41.1	7.94	44.6	9.03	48.0	10.2	51.4	11.6	55.0	12.6	56.0	12.7
	23	34.3	6.54	37.7	7.51	41.1	8.59	44.6	9.78	48.0	11.1	51.4	12.5	54.0	13.1	55.0	13.2
	25	34.3	7.06	37.7	8.12	41.1	9.29	44.6	10.6	48.0	12.0	51.1	13.4	53.1	13.6	54.1	13.7
	27	34.3	7.62	37.7	8.77	41.1	10.0	44.6	11.5	48.0	13.0	50.1	13.9	52.1	14.1	53.1	14.2
	30	34.3	8.53	37.7	9.84	41.1	11.3	44.6	12.9	47.7	14.6	48.6	14.7	50.5	15.0	51.5	15.1
	33	34.3	9.54	37.7	11.0	41.1	12.8	44.6	14.8	46.1	15.5	47.0	15.6	48.9	15.8	49.9	16.0
	35	34.3	10.3	37.7	12.0	41.1	14.0	44.1	15.9	45.1	16.1	46.0	16.2	47.8	16.4	48.7	16.6
	37	34.3	11.2	37.7	13.2	41.1	15.4	43.1	16.5	44.0	16.6	44.9	16.8	46.7	17.0	47.6	17.2
	40	34.3	12.9	37.7	15.2	40.6	17.3	41.5	17.4	42.4	17.5	43.2	17.7	45.0	17.9	45.9	18.1
	43	34.3	14.8	37.7	17.6	39.0	18.2	39.8	18.3	40.7	18.4	41.6	18.6	43.3	18.8	44.2	19.0
44.0 (110%)	10	31.4	4.82	34.6	5.23	37.7	5.64	40.9	6.06	44.0	6.47	47.1	6.88	53.4	7.76	56.6	8.64
	15	31.4	4.82	34.6	5.23	37.7	5.64	40.9	6.14	44.0	6.90	47.1	7.74	53.4	9.65	56.6	10.7
	21	31.4	5.36	34.6	6.12	37.7	6.94	40.9	7.85	44.0	8.84	47.1	9.92	53.4	12.4	54.5	12.5
	23	31.4	5.79	34.6	6.61	37.7	7.51	40.9	8.50	44.0	9.57	47.1	10.8	52.6	12.9	53.6	13.0
	25	31.4	6.25	34.6	7.14	37.7	8.12	40.9	9.19	44.0	10.4	47.1	11.6	51.7	13.4	52.7	13.5
	27	31.4	6.74	34.6	7.71	37.7	8.77	40.9	9.93	44.0	11.2	47.1	12.6	50.8	13.9	51.7	14.1
	30	31.4	7.53	34.6	8.63	37.7	9.84	40.9	11.2	44.0	12.6	47.1	14.3	49.3	14.8	50.2	14.9
	33	31.4	8.42	34.6	9.66	37.7	11.0	40.9	12.6	44.0	14.5	45.9	15.4	47.7	15.7	48.6	15.8
	35	31.4	9.06	34.6	10.4	37.7	12.0	40.9	13.9	44.0	15.9	44.9	16.0	46.7	16.3	47.6	16.4
	37	31.4	9.80	34.6	11.4	37.7	13.2	40.9	15.2	43.0	16.5	43.8	16.6	45.6	16.9	46.5	17.0
	40	31.4	11.2	34.6	13.0	37.7	15.2	40.5	17.3	41.4	17.4	42.2	17.5	44.0	17.8	44.9	17.9
	43	31.4	12.8	34.6	15.0	37.7	17.6	39.0	18.2	39.8	18.3	40.6	18.4	42.3	18.7	43.2	18.8

TC : Total Capacity kW.

PI : Power Input kW (Compressor + Outdoor fan motor).

The data is based on the following conditions. Pipe length : 7.5 m; Height difference : 0 m.

MODEL SELECTION

■ MODEL : AJ∗126L

• CAPACITY : 40.0kW (14HP)

Total rated cooling capacity of indoor unit	Outdoor temperature	Indoor temperature															
		20℃CDB / 15℃CWB		23℃CDB / 16℃CWB		24℃CDB / 17℃CWB		26℃CDB / 18℃CWB		27℃CDB / 19℃CWB		28℃CDB / 20℃CWB		30℃CDB / 22℃CWB		32℃CDB / 23℃CWB	
	(℃DB)	TC	PI	TC	PI	TC	PI	TC	PI	TC	PI	TC	PI	TC	PI	TC	PI
40.0 (100%)	10	28.6	4.45	31.4	4.82	34.3	5.20	37.1	5.57	40.0	5.94	42.9	6.32	48.6	7.07	51.4	7.44
	15	28.6	4.45	31.4	4.82	34.3	5.20	37.1	5.57	40.0	5.94	42.9	6.62	48.6	8.15	51.4	9.01
	21	28.6	4.73	31.4	5.36	34.3	6.05	37.1	6.79	40.0	7.59	42.9	8.47	48.6	10.4	51.4	11.6
	23	28.6	5.11	31.4	5.79	34.3	6.54	37.1	7.34	40.0	8.22	42.9	9.17	48.6	11.3	51.4	12.5
	25	28.6	5.51	31.4	6.25	34.3	7.06	37.1	7.94	40.0	8.89	42.9	9.92	48.6	12.3	51.1	13.4
	27	28.6	5.93	31.4	6.74	34.3	7.62	37.1	8.57	40.0	9.61	42.9	10.7	48.6	13.3	50.2	13.9
	30	28.6	6.62	31.4	7.53	34.3	8.53	37.1	9.61	40.0	10.8	42.9	12.1	47.9	14.6	48.8	14.7
	33	28.6	7.38	31.4	8.42	34.3	9.54	37.1	10.8	40.0	12.2	42.9	13.8	46.4	15.5	47.3	15.6
	35	28.6	7.94	31.4	9.06	34.3	10.3	37.1	11.7	40.0	13.3	42.9	15.1	45.4	16.1	46.2	16.2
	37	28.6	8.53	31.4	9.80	34.3	11.2	37.1	12.8	40.0	14.6	42.6	16.5	44.4	16.7	45.2	16.8
	40	28.6	9.67	31.4	11.2	34.3	12.9	37.1	14.8	40.0	16.9	41.1	17.4	42.8	17.6	43.6	17.7
	43	28.6	11.0	31.4	12.8	34.3	14.8	37.1	17.1	38.8	18.1	39.6	18.3	41.2	18.5	42.0	18.6
36.0 (90%)	10	25.7	4.07	28.3	4.41	30.9	4.75	33.4	5.08	36.0	5.42	38.6	5.76	43.7	6.43	46.3	6.77
	15	25.7	4.07	28.3	4.41	30.9	4.75	33.4	5.08	36.0	5.42	38.6	5.76	43.7	6.83	46.3	7.51
	21	25.7	4.17	28.3	4.67	30.9	5.23	33.4	5.83	36.0	6.48	38.6	7.18	43.7	8.74	46.3	9.61
	23	25.7	4.47	28.3	5.04	30.9	5.65	33.4	6.31	36.0	7.01	38.6	7.77	43.7	9.47	46.3	10.4
	25	25.7	4.82	28.3	5.44	30.9	6.10	33.4	6.81	36.0	7.58	38.6	8.40	43.7	10.3	46.3	11.3
	27	25.7	5.19	28.3	5.85	30.9	6.57	33.4	7.35	36.0	8.18	38.6	9.08	43.7	11.1	46.3	12.2
	30	25.7	5.78	28.3	6.53	30.9	7.35	33.4	8.22	36.0	9.16	38.6	10.2	43.7	12.5	46.3	13.8
	33	25.7	6.43	28.3	7.28	30.9	8.20	33.4	9.19	36.0	10.3	38.6	11.4	43.7	14.3	45.7	15.4
	35	25.7	6.91	28.3	7.83	30.9	8.83	33.4	9.91	36.0	11.1	38.6	12.5	43.7	15.7	44.7	16.0
	37	25.7	7.42	28.3	8.42	30.9	9.53	33.4	10.8	36.0	12.2	38.6	13.7	42.9	16.5	43.8	16.6
	40	25.7	8.31	28.3	9.52	30.9	10.9	33.4	12.3	36.0	14.0	38.6	15.8	41.4	17.4	42.3	17.5
	43	25.7	9.43	28.3	10.8	30.9	12.4	33.4	14.2	36.0	16.1	38.4	18.1	39.9	18.3	40.7	18.4
32.0 (80%)	10	22.9	3.70	25.1	4.00	27.4	4.30	29.7	4.60	32.0	4.90	34.3	5.20	38.9	5.79	41.1	6.09
	15	22.9	3.70	25.1	4.00	27.4	4.30	29.7	4.60	32.0	4.90	34.3	5.20	38.9	5.79	41.1	6.20
	21	22.9	3.79	25.1	4.10	27.4	4.49	29.7	4.97	32.0	5.49	34.3	6.05	38.9	7.26	41.1	7.94
	23	22.9	3.97	25.1	4.35	27.4	4.85	29.7	5.37	32.0	5.94	34.3	6.54	38.9	7.86	41.1	8.59
	25	22.9	4.19	25.1	4.69	27.4	5.22	29.7	5.80	32.0	6.41	34.3	7.06	38.9	8.50	41.1	9.29
	27	22.9	4.50	25.1	5.05	27.4	5.63	29.7	6.25	32.0	6.91	34.3	7.62	38.9	9.18	41.1	10.0
	30	22.9	5.01	25.1	5.62	27.4	6.28	29.7	6.98	32.0	7.73	34.3	8.53	38.9	10.3	41.1	11.3
	33	22.9	5.56	25.1	6.25	27.4	6.99	29.7	7.79	32.0	8.63	34.3	9.54	38.9	11.6	41.1	12.8
	35	22.9	5.96	25.1	6.71	27.4	7.51	29.7	8.37	32.0	9.30	34.3	10.3	38.9	12.7	41.1	14.0
	37	22.9	6.39	25.1	7.20	27.4	8.07	29.7	9.01	32.0	10.1	34.3	11.2	38.9	13.9	41.1	15.4
	40	22.9	7.09	25.1	8.06	27.4	9.11	29.7	10.3	32.0	11.5	34.3	12.9	38.9	16.0	40.7	17.3
	43	22.9	8.01	25.1	9.13	27.4	10.4	29.7	11.7	32.0	13.2	34.3	14.8	38.5	18.1	39.2	18.2
28.0 (70%)	10	20.0	3.33	22.0	3.59	24.0	3.85	26.0	4.11	28.0	4.37	30.0	4.64	34.0	5.16	36.0	5.42
	15	20.0	3.33	22.0	3.59	24.0	3.85	26.0	4.11	28.0	4.37	30.0	4.64	34.0	5.16	36.0	5.42
	21	20.0	3.40	22.0	3.67	24.0	3.94	26.0	4.21	28.0	4.61	30.0	5.04	34.0	5.97	36.0	6.48
	23	20.0	3.56	22.0	3.85	24.0	4.13	26.0	4.53	28.0	4.98	30.0	5.44	34.0	6.46	36.0	7.01
	25	20.0	3.73	22.0	4.03	24.0	4.43	26.0	4.89	28.0	5.36	30.0	5.87	34.0	6.98	36.0	7.58
	27	20.0	3.90	22.0	4.31	24.0	4.77	26.0	5.26	28.0	5.78	30.0	6.33	34.0	7.53	36.0	8.18
	30	20.0	4.30	22.0	4.79	24.0	5.31	26.0	5.86	28.0	6.45	30.0	7.07	34.0	8.42	36.0	9.16
	33	20.0	4.76	22.0	5.31	24.0	5.90	26.0	6.53	28.0	7.19	30.0	7.89	34.0	9.42	36.0	10.3
	35	20.0	5.09	22.0	5.69	24.0	6.33	26.0	7.01	28.0	7.72	30.0	8.49	34.0	10.2	36.0	11.1
	37	20.0	5.45	22.0	6.10	24.0	6.79	26.0	7.52	28.0	8.30	30.0	9.14	34.0	11.1	36.0	12.2
	40	20.0	6.03	22.0	6.77	24.0	7.57	26.0	8.44	28.0	9.38	30.0	10.4	34.0	12.7	36.0	14.0
	43	20.0	6.75	22.0	7.62	24.0	8.56	26.0	9.58	28.0	10.7	30.0	11.9	34.0	14.6	36.0	16.1
24.0 (60%)	10	17.1	2.95	18.9	3.18	20.6	3.40	22.3	3.63	24.0	3.85	25.7	4.07	29.1	4.52	30.9	4.75
	15	17.1	2.95	18.9	3.18	20.6	3.40	22.3	3.63	24.0	3.85	25.7	4.07	29.1	4.52	30.9	4.75
	21	17.1	3.02	18.9	3.25	20.6	3.48	22.3	3.71	24.0	3.94	25.7	4.17	29.1	4.85	30.9	5.23
	23	17.1	3.16	18.9	3.40	20.6	3.64	22.3	3.89	24.0	4.13	25.7	4.47	29.1	5.24	30.9	5.65
	25	17.1	3.30	18.9	3.55	20.6	3.81	22.3	4.07	24.0	4.43	25.7	4.82	29.1	5.65	30.9	6.10
	27	17.1	3.44	18.9	3.71	20.6	3.99	22.3	4.37	24.0	4.77	25.7	5.19	29.1	6.09	30.9	6.57
	30	17.1	3.67	18.9	4.03	20.6	4.43	22.3	4.86	24.0	5.31	25.7	5.78	29.1	6.80	30.9	7.35
	33	17.1	4.02	18.9	4.46	20.6	4.92	22.3	5.40	24.0	5.90	25.7	6.43	29.1	7.58	30.9	8.20
	35	17.1	4.30	18.9	4.77	20.6	5.26	22.3	5.78	24.0	6.33	25.7	6.91	29.1	8.15	30.9	8.83
	37	17.1	4.59	18.9	5.10	20.6	5.63	22.3	6.20	24.0	6.79	25.7	7.42	29.1	8.77	30.9	9.53
	40	17.1	5.06	18.9	5.64	20.6	6.24	22.3	6.87	24.0	7.57	25.7	8.31	29.1	9.95	30.9	10.9
	43	17.1	5.60	18.9	6.28	20.6	6.99	22.3	7.75	24.0	8.56	25.7	9.43	29.1	11.3	30.9	12.4
20.0 (50%)	10	14.3	2.58	15.7	2.77	17.1	2.95	18.6	3.14	20.0	3.33	21.4	3.51	24.3	3.89	25.7	4.07
	15	14.3	2.58	15.7	2.77	17.1	2.95	18.6	3.14	20.0	3.33	21.4	3.51	24.3	3.89	25.7	4.07
	21	14.3	2.63	15.7	2.83	17.1	3.02	18.6	3.21	20.0	3.40	21.4	3.60	24.3	3.98	25.7	4.17
	23	14.3	2.75	15.7	2.95	17.1	3.16	18.6	3.36	20.0	3.56	21.4	3.77	24.3	4.18	25.7	4.47
	25	14.3	2.86	15.7	3.08	17.1	3.30	18.6	3.51	20.0	3.73	21.4	3.94	24.3	4.50	25.7	4.82
	27	14.3	2.99	15.7	3.21	17.1	3.44	18.6	3.67	20.0	3.90	21.4	4.18	24.3	4.84	25.7	5.19
	30	14.3	3.17	15.7	3.42	17.1	3.67	18.6	3.96	20.0	4.30	21.4	4.64	24.3	5.39	25.7	5.78
	33	14.3	3.37	15.7	3.68	17.1	4.02	18.6	4.38	20.0	4.76	21.4	5.15	24.3	5.99	25.7	6.43
	35	14.3	3.56	15.7	3.92	17.1	4.30	18.6	4.69	20.0	5.09	21.4	5.52	24.3	6.43	25.7	6.91
	37	14.3	3.80	15.7	4.18	17.1	4.59	18.6	5.01	20.0	5.45	21.4	5.91	24.3	6.89	25.7	7.42
	40	14.3	4.17	15.7	4.61	17.1	5.06	18.6	5.54	20.0	6.03	21.4	6.55	24.3	7.69	25.7	8.31
	43	14.3	4.59	15.7	5.08	17.1	5.60	18.6	6.16	20.0	6.75	21.4	7.36	24.3	8.70	25.7	9.43

TC : Total Capacity kW.

PI : Power Input kW (Compressor + Outdoor fan motor).

The data is based on the following conditions. Pipe length : 7.5 m; Height difference : 0 m.

MODEL SELECTION

■ MODELS : AJ∗A72L + AJ∗A72U

• CAPACITY : 44.8kW (16HP)

Total rated cooling capacity of indoor unit	Outdoor temperature	Indoor temperature															
		20℃CDB / 15℃CWB		23℃CDB / 16℃CWB		24℃CDB / 17℃CWB		26℃CDB / 18℃CWB		27℃CDB / 19℃CWB		28℃CDB / 20℃CWB		30℃CDB / 22℃CWB		32℃CDB / 23℃CWB	
	(℃DB)	TC	PI	TC	PI	TC	PI	TC	PI	TC	PI	TC	PI	TC	PI	TC	PI
67.2 (150%)	10	48.0	6.91	52.8	7.48	57.6	8.04	62.4	9.10	67.2	10.4	69.0	10.7	71.7	10.9	73.0	11.0
	15	48.0	7.27	52.8	8.42	57.6	9.71	62.4	11.2	65.0	11.8	66.3	11.9	68.9	12.1	70.2	12.2
	21	48.0	9.13	52.8	10.6	57.6	12.3	60.5	13.2	61.7	13.3	63.0	13.4	65.5	13.6	66.7	13.8
	23	48.0	9.84	52.8	11.4	57.6	13.3	59.4	13.7	60.6	13.8	61.8	13.9	64.3	14.1	65.5	14.3
	25	48.0	10.6	52.8	12.3	57.1	14.1	58.3	14.2	59.5	14.3	60.7	14.4	63.1	14.7	64.3	14.8
	27	48.0	11.4	52.8	13.3	56.0	14.6	57.2	14.7	58.4	14.8	59.5	14.9	61.9	15.2	63.0	15.3
	30	48.0	12.8	52.8	15.0	54.3	15.4	55.4	15.5	56.5	15.6	57.6	15.8	59.9	16.1	61.1	16.2
	33	48.0	14.4	51.3	16.1	52.4	16.2	53.5	16.4	54.6	16.5	55.7	16.7	58.0	16.9	59.1	17.1
	35	48.0	15.8	50.1	16.7	51.2	16.8	52.2	17.0	53.3	17.1	54.4	17.3	56.6	17.5	57.8	17.7
	37	47.8	17.1	48.8	17.3	49.9	17.4	51.0	17.6	52.0	17.7	53.1	17.8	55.3	18.1	56.4	18.3
	40	45.9	18.0	46.9	18.2	48.0	18.3	49.0	18.4	50.1	18.6	51.2	18.7	53.3	19.0	54.4	19.1
	43	44.0	18.9	45.0	19.0	46.0	19.2	47.1	19.3	48.1	19.5	49.1	19.6	51.3	19.9	52.3	20.0
62.7 (140%)	10	44.8	6.53	49.3	7.06	53.8	7.59	58.2	8.12	62.7	9.19	67.2	10.4	70.3	10.8	71.6	10.9
	15	44.8	6.57	49.3	7.56	53.8	8.66	58.2	9.89	62.7	11.3	65.1	11.8	67.6	12.0	68.9	12.1
	21	44.8	8.25	49.3	9.51	53.8	10.9	58.2	12.5	60.6	13.2	61.8	13.3	64.3	13.5	65.5	13.6
	23	44.8	8.88	49.3	10.3	53.8	11.8	58.2	13.5	59.6	13.7	60.7	13.8	63.1	14.0	64.3	14.2
	25	44.8	9.55	49.3	11.0	53.8	12.7	57.3	14.1	58.5	14.2	59.6	14.3	62.0	14.5	63.2	14.7
	27	44.8	10.3	49.3	11.9	53.8	13.7	56.2	14.6	57.4	14.7	58.5	14.8	60.8	15.1	62.0	15.2
	30	44.8	11.5	49.3	13.3	53.4	15.3	54.5	15.4	55.6	15.5	56.7	15.7	58.9	15.9	60.1	16.1
	33	44.8	12.8	49.3	15.1	51.6	16.1	52.6	16.3	53.7	16.4	54.8	16.6	57.0	16.8	58.1	17.0
	35	44.8	14.0	49.3	16.6	50.3	16.7	51.4	16.9	52.5	17.0	53.6	17.1	55.7	17.4	56.8	17.6
	37	44.8	15.3	48.1	17.2	49.1	17.3	50.2	17.5	51.2	17.6	52.3	17.7	54.4	18.0	55.5	18.1
	40	44.8	17.6	46.2	18.1	47.2	18.2	48.3	18.3	49.3	18.5	50.4	18.6	52.5	18.9	53.5	19.0
	43	43.4	18.8	44.4	18.9	45.4	19.1	46.4	19.2	47.4	19.4	48.4	19.5	50.5	19.8	51.5	19.9
58.2 (130%)	10	41.6	6.15	45.8	6.65	49.9	7.14	54.1	7.63	58.2	8.12	62.4	9.10	68.7	10.7	70.0	10.8
	15	41.6	6.15	45.8	6.78	49.9	7.71	54.1	8.75	58.2	9.89	62.4	11.2	66.1	11.9	67.4	12.0
	21	41.6	7.43	45.8	8.51	49.9	9.70	54.1	11.0	58.2	12.5	60.6	13.2	63.0	13.4	64.1	13.5
	23	41.6	7.99	45.8	9.16	49.9	10.5	54.1	11.9	58.2	13.5	59.5	13.7	61.9	13.9	63.0	14.0
	25	41.6	8.58	45.8	9.85	49.9	11.3	54.1	12.9	57.3	14.1	58.5	14.2	60.8	14.4	61.9	14.5
	27	41.6	9.22	45.8	10.6	49.9	12.1	54.1	13.9	56.2	14.6	57.4	14.7	59.6	14.9	60.8	15.1
	30	41.6	10.3	45.8	11.8	49.9	13.6	53.5	15.3	54.5	15.4	55.6	15.5	57.8	15.8	58.9	15.9
	33	41.6	11.4	45.8	13.3	49.9	15.5	51.7	16.2	52.7	16.3	53.8	16.4	56.0	16.7	57.0	16.8
	35	41.6	12.4	45.8	14.5	49.4	16.6	50.5	16.7	51.5	16.9	52.6	17.0	54.7	17.3	55.8	17.4
	37	41.6	13.5	45.8	15.9	48.3	17.2	49.3	17.3	50.3	17.5	51.3	17.6	53.4	17.9	54.5	18.0
	40	41.6	15.4	45.4	18.0	46.4	18.1	47.4	18.2	48.4	18.4	49.5	18.5	51.5	18.8	52.6	18.9
	43	41.6	17.7	43.6	18.8	44.6	19.0	45.6	19.1	46.6	19.2	47.6	19.4	49.6	19.6	50.6	19.8
53.8 (120%)	10	38.4	5.78	42.2	6.23	46.1	6.68	49.9	7.14	53.8	7.59	57.6	8.04	65.3	9.88	68.3	10.6
	15	38.4	5.78	42.2	6.23	46.1	6.84	49.9	7.71	53.8	8.66	57.6	9.71	64.6	11.8	65.8	11.9
	21	38.4	6.67	42.2	7.58	46.1	8.59	49.9	9.70	53.8	10.9	57.6	12.3	61.5	13.3	62.6	13.4
	23	38.4	7.16	42.2	8.16	46.1	9.25	49.9	10.5	53.8	11.8	57.6	13.3	60.4	13.8	61.6	13.9
	25	38.4	7.69	42.2	8.77	46.1	9.96	49.9	11.3	53.8	12.7	57.1	14.1	59.4	14.3	60.5	14.4
	27	38.4	8.25	42.2	9.42	46.1	10.7	49.9	12.1	53.8	13.7	56.1	14.6	58.3	14.8	59.4	14.9
	30	38.4	9.17	42.2	10.5	46.1	12.0	49.9	13.6	53.4	15.3	54.4	15.4	56.6	15.7	57.6	15.8
	33	38.4	10.2	42.2	11.7	46.1	13.5	49.9	15.5	51.6	16.2	52.7	16.3	54.8	16.5	55.8	16.7
	35	38.4	10.9	42.2	12.7	46.1	14.7	49.5	16.6	50.5	16.7	51.5	16.9	53.6	17.1	54.6	17.3
	37	38.4	11.9	42.2	13.8	46.1	16.1	48.3	17.2	49.3	17.3	50.3	17.5	52.3	17.7	53.4	17.9
	40	38.4	13.5	42.2	15.8	45.5	18.0	46.5	18.1	47.5	18.2	48.5	18.4	50.5	18.6	51.5	18.8
	43	38.4	15.4	42.2	18.2	43.7	18.9	44.7	19.0	45.7	19.1	46.6	19.3	48.6	19.5	49.6	19.7
49.3 (110%)	10	35.2	5.40	38.7	5.81	42.2	6.23	45.8	6.65	49.3	7.06	52.8	7.48	59.8	8.46	63.4	9.35
	15	35.2	5.40	38.7	5.81	42.2	6.23	45.8	6.78	49.3	7.56	52.8	8.42	59.8	10.4	63.4	11.5
	21	35.2	5.97	38.7	6.74	42.2	7.58	45.8	8.51	49.3	9.51	52.8	10.6	59.8	13.1	61.0	13.2
	23	35.2	6.41	38.7	7.24	42.2	8.16	45.8	9.16	49.3	10.3	52.8	11.4	58.9	13.6	60.0	13.7
	25	35.2	6.87	38.7	7.78	42.2	8.77	45.8	9.85	49.3	11.0	52.8	12.3	57.8	14.1	58.9	14.2
	27	35.2	7.36	38.7	8.35	42.2	9.42	45.8	10.6	49.3	11.9	52.8	13.3	56.8	14.6	57.9	14.7
	30	35.2	8.16	38.7	9.27	42.2	10.5	45.8	11.8	49.3	13.3	52.8	15.0	55.2	15.5	56.2	15.6
	33	35.2	9.05	38.7	10.3	42.2	11.7	45.8	13.3	49.3	15.1	51.4	16.1	53.4	16.4	54.5	16.5
	35	35.2	9.70	38.7	11.1	42.2	12.7	45.8	14.5	49.3	16.6	50.3	16.7	52.3	17.0	53.3	17.1
	37	35.2	10.4	38.7	12.0	42.2	13.8	45.8	15.9	48.1	17.2	49.1	17.3	51.1	17.6	52.1	17.7
	40	35.2	11.8	38.7	13.7	42.2	15.8	45.5	18.0	46.4	18.1	47.4	18.2	49.3	18.5	50.3	18.6
	43	35.2	13.4	38.7	15.6	42.2	18.2	43.7	18.9	44.6	19.0	45.6	19.1	47.5	19.4	48.4	19.5

TC : Total Capacity kW.

PI : Power Input kW (Compressor + Outdoor fan motor).

The data is based on the following conditions. Pipe length : 7.5 m; Height difference : 0 m.

MODEL SELECTION

■ MODELS : AJ*A72L + AJ*A72U

• CAPACITY : 44.8kW (16HP)

Total rated cooling capacity of indoor unit	Outdoor temperature	Indoor temperature															
		20℃CDB / 15℃CWB		23℃CDB / 16℃CWB		24℃CDB / 17℃CWB		26℃CDB / 18℃CWB		27℃CDB / 19℃CWB		28℃CDB / 20℃CWB		30℃CDB / 22℃CWB		32℃CDB / 23℃CWB	
	(℃DB)	TC	PI	TC	PI	TC	PI	TC	PI	TC	PI	TC	PI	TC	PI	TC	PI
44.8 (100%)	10	32.0	5.02	35.2	5.40	38.4	5.78	41.6	6.15	44.8	6.53	48.0	6.91	54.4	7.67	57.6	8.04
	15	32.0	5.02	35.2	5.40	38.4	5.78	41.6	6.15	44.8	6.57	48.0	7.27	54.4	8.83	57.6	9.71
	21	32.0	5.33	35.2	5.97	38.4	6.67	41.6	7.43	44.8	8.25	48.0	9.13	54.4	11.1	57.6	12.3
	23	32.0	5.71	35.2	6.41	38.4	7.16	41.6	7.99	44.8	8.88	48.0	9.84	54.4	12.0	57.6	13.3
	25	32.0	6.11	35.2	6.87	38.4	7.69	41.6	8.58	44.8	9.55	48.0	10.6	54.4	13.0	57.2	14.1
	27	32.0	6.54	35.2	7.36	38.4	8.25	41.6	9.22	44.8	10.3	48.0	11.4	54.4	14.0	56.2	14.6
	30	32.0	7.24	35.2	8.16	38.4	9.17	41.6	10.3	44.8	11.5	48.0	12.8	53.6	15.3	54.6	15.4
	33	32.0	8.00	35.2	9.05	38.4	10.2	41.6	11.4	44.8	12.8	48.0	14.4	52.0	16.2	52.9	16.3
	35	32.0	8.56	35.2	9.70	38.4	10.9	41.6	12.4	44.8	14.0	48.0	15.8	50.8	16.8	51.8	16.9
	37	32.0	9.16	35.2	10.4	38.4	11.9	41.6	13.5	44.8	15.3	47.8	17.1	49.7	17.4	50.7	17.5
	40	32.0	10.3	35.2	11.8	38.4	13.5	41.6	15.4	44.8	17.6	46.1	18.0	48.0	18.3	48.9	18.4
	43	32.0	11.6	35.2	13.4	38.4	15.4	41.6	17.7	43.5	18.8	44.4	19.0	46.2	19.2	47.2	19.3
40.3 (90%)	10	28.8	4.64	31.7	4.98	34.6	5.32	37.4	5.66	40.3	6.00	43.2	6.34	49.0	7.02	51.8	7.36
	15	28.8	4.64	31.7	4.98	34.6	5.32	37.4	5.66	40.3	6.00	43.2	6.34	49.0	7.49	51.8	8.18
	21	28.8	4.74	31.7	5.26	34.6	5.84	37.4	6.45	40.3	7.12	43.2	7.83	49.0	9.42	51.8	10.3
	23	28.8	5.06	31.7	5.64	34.6	6.26	37.4	6.93	40.3	7.65	43.2	8.42	49.0	10.2	51.8	11.1
	25	28.8	5.41	31.7	6.04	34.6	6.71	37.4	7.44	40.3	8.22	43.2	9.06	49.0	10.9	51.8	12.0
	27	28.8	5.78	31.7	6.46	34.6	7.19	37.4	7.98	40.3	8.82	43.2	9.73	49.0	11.8	51.8	12.9
	30	28.8	6.38	31.7	7.15	34.6	7.97	37.4	8.86	40.3	9.81	43.2	10.9	49.0	13.2	51.8	14.5
	33	28.8	7.04	31.7	7.90	34.6	8.83	37.4	9.84	40.3	10.9	43.2	12.1	49.0	15.0	51.2	16.1
	35	28.8	7.52	31.7	8.45	34.6	9.46	37.4	10.6	40.3	11.8	43.2	13.2	49.0	16.4	50.1	16.7
	37	28.8	8.03	31.7	9.04	34.6	10.2	37.4	11.4	40.3	12.8	43.2	14.4	48.1	17.2	49.0	17.3
	40	28.8	8.93	31.7	10.2	34.6	11.5	37.4	13.0	40.3	14.6	43.2	16.4	46.5	18.1	47.4	18.2
	43	28.8	10.1	31.7	11.5	34.6	13.0	37.4	14.8	40.3	16.7	43.0	18.8	44.8	19.0	45.7	19.1
35.8 (80%)	10	25.6	4.26	28.2	4.57	30.7	4.87	33.3	5.17	35.8	5.47	38.4	5.78	43.5	6.38	46.1	6.68
	15	25.6	4.26	28.2	4.57	30.7	4.87	33.3	5.17	35.8	5.47	38.4	5.78	43.5	6.38	46.1	6.84
	21	25.6	4.35	28.2	4.66	30.7	5.08	33.3	5.58	35.8	6.11	38.4	6.67	43.5	7.91	46.1	8.59
	23	25.6	4.54	28.2	4.94	30.7	5.44	33.3	5.98	35.8	6.55	38.4	7.16	43.5	8.51	46.1	9.25
	25	25.6	4.77	28.2	5.28	30.7	5.83	33.3	6.41	35.8	7.03	38.4	7.69	43.5	9.15	46.1	9.96
	27	25.6	5.09	28.2	5.64	30.7	6.23	33.3	6.86	35.8	7.53	38.4	8.25	43.5	9.84	46.1	10.7
	30	25.6	5.60	28.2	6.22	30.7	6.89	33.3	7.60	35.8	8.36	38.4	9.17	43.5	11.0	46.1	12.0
	33	25.6	6.16	28.2	6.86	30.7	7.61	33.3	8.41	35.8	9.27	38.4	10.2	43.5	12.2	46.1	13.5
	35	25.6	6.56	28.2	7.32	30.7	8.13	33.3	9.00	35.8	9.93	38.4	10.9	43.5	13.3	46.1	14.7
	37	25.6	6.99	28.2	7.81	30.7	8.70	33.3	9.64	35.8	10.7	38.4	11.9	43.5	14.6	46.1	16.1
	40	25.6	7.70	28.2	8.67	30.7	9.73	33.3	10.9	35.8	12.1	38.4	13.5	43.5	16.7	45.6	18.0
	43	25.6	8.62	28.2	9.75	30.7	11.0	33.3	12.3	35.8	13.8	38.4	15.4	43.1	18.8	44.0	18.9
31.4 (70%)	10	22.4	3.89	24.6	4.15	26.9	4.42	29.1	4.68	31.4	4.94	33.6	5.21	38.1	5.74	40.3	6.00
	15	22.4	3.89	24.6	4.15	26.9	4.42	29.1	4.68	31.4	4.94	33.6	5.21	38.1	5.74	40.3	6.00
	21	22.4	3.96	24.6	4.24	26.9	4.51	29.1	4.79	31.4	5.20	33.6	5.64	38.1	6.60	40.3	7.12
	23	22.4	4.12	24.6	4.41	26.9	4.70	29.1	5.13	31.4	5.57	33.6	6.05	38.1	7.09	40.3	7.65
	25	22.4	4.29	24.6	4.60	26.9	5.02	29.1	5.48	31.4	5.97	33.6	6.48	38.1	7.61	40.3	8.22
	27	22.4	4.46	24.6	4.89	26.9	5.36	29.1	5.86	31.4	6.39	33.6	6.94	38.1	8.16	40.3	8.82
	30	22.4	4.88	24.6	5.38	26.9	5.90	29.1	6.47	31.4	7.06	33.6	7.69	38.1	9.06	40.3	9.81
	33	22.4	5.34	24.6	5.91	26.9	6.50	29.1	7.13	31.4	7.80	33.6	8.52	38.1	10.1	40.3	10.9
	35	22.4	5.68	24.6	6.29	26.9	6.93	29.1	7.62	31.4	8.34	33.6	9.12	38.1	10.8	40.3	11.8
	37	22.4	6.04	24.6	6.70	26.9	7.40	29.1	8.14	31.4	8.93	33.6	9.77	38.1	11.7	40.3	12.8
	40	22.4	6.63	24.6	7.37	26.9	8.18	29.1	9.06	31.4	10.0	33.6	11.0	38.1	13.3	40.3	14.6
	43	22.4	7.35	24.6	8.23	26.9	9.18	29.1	10.2	31.4	11.3	33.6	12.5	38.1	15.2	40.3	16.7
26.9 (60%)	10	19.2	3.51	21.1	3.73	23.0	3.96	25.0	4.19	26.9	4.42	28.8	4.64	32.6	5.10	34.6	5.32
	15	19.2	3.51	21.1	3.73	23.0	3.96	25.0	4.19	26.9	4.42	28.8	4.64	32.6	5.10	34.6	5.32
	21	19.2	3.58	21.1	3.81	23.0	4.04	25.0	4.28	26.9	4.51	28.8	4.74	32.6	5.45	34.6	5.84
	23	19.2	3.71	21.1	3.96	23.0	4.21	25.0	4.45	26.9	4.70	28.8	5.06	32.6	5.84	34.6	6.26
	25	19.2	3.85	21.1	4.12	23.0	4.38	25.0	4.65	26.9	5.02	28.8	5.41	32.6	6.26	34.6	6.71
	27	19.2	4.00	21.1	4.28	23.0	4.57	25.0	4.96	26.9	5.36	28.8	5.78	32.6	6.70	34.6	7.19
	30	19.2	4.23	21.1	4.60	23.0	5.02	25.0	5.45	26.9	5.90	28.8	6.38	32.6	7.42	34.6	7.97
	33	19.2	4.60	21.1	5.04	23.0	5.50	25.0	5.99	26.9	6.50	28.8	7.04	32.6	8.21	34.6	8.83
	35	19.2	4.87	21.1	5.35	23.0	5.85	25.0	6.38	26.9	6.93	28.8	7.52	32.6	8.78	34.6	9.46
	37	19.2	5.17	21.1	5.68	23.0	6.23	25.0	6.80	26.9	7.40	28.8	8.03	32.6	9.40	34.6	10.2
	40	19.2	5.65	21.1	6.22	23.0	6.83	25.0	7.48	26.9	8.18	28.8	8.93	32.6	10.6	34.6	11.5
	43	19.2	6.19	21.1	6.87	23.0	7.59	25.0	8.36	26.9	9.18	28.8	10.1	32.6	12.0	34.6	13.0
22.4 (50%)	10	16.0	3.13	17.6	3.32	19.2	3.51	20.8	3.70	22.4	3.89	24.0	4.08	27.2	4.45	28.8	4.64
	15	16.0	3.13	17.6	3.32	19.2	3.51	20.8	3.70	22.4	3.89	24.0	4.08	27.2	4.45	28.8	4.64
	21	16.0	3.19	17.6	3.38	19.2	3.58	20.8	3.77	22.4	3.96	24.0	4.16	27.2	4.55	28.8	4.74
	23	16.0	3.30	17.6	3.51	19.2	3.71	20.8	3.92	22.4	4.12	24.0	4.33	27.2	4.76	28.8	5.06
	25	16.0	3.42	17.6	3.64	19.2	3.85	20.8	4.07	22.4	4.29	24.0	4.51	27.2	5.09	28.8	5.41
	27	16.0	3.54	17.6	3.77	19.2	4.00	20.8	4.23	22.4	4.46	24.0	4.76	27.2	5.43	28.8	5.78
	30	16.0	3.73	17.6	3.98	19.2	4.23	20.8	4.54	22.4	4.88	24.0	5.23	27.2	5.98	28.8	6.38
	33	16.0	3.93	17.6	4.25	19.2	4.60	20.8	4.96	22.4	5.34	24.0	5.74	27.2	6.59	28.8	7.04
	35	16.0	4.13	17.6	4.49	19.2	4.87	20.8	5.27	22.4	5.68	24.0	6.11	27.2	7.03	28.8	7.52
	37	16.0	4.36	17.6	4.76	19.2	5.17	20.8	5.60	22.4	6.04	24.0	6.51	27.2	7.50	28.8	8.03
	40	16.0	4.74	17.6	5.19	19.2	5.65	20.8	6.13	22.4	6.63	24.0	7.15	27.2	8.30	28.8	8.93
	43	16.0	5.16	17.6	5.66	19.2	6.19	20.8	6.75	22.4	7.35	24.0	7.97	27.2	9.32	28.8	10.1

TC : Total Capacity kW.

PI : Power Input kW (Compressor + Outdoor fan motor).

The data is based on the following conditions. Pipe length : 7.5 m; Height difference : 0 m.

MODEL SELECTION

■ MODELS : AJ*A90L + AJ*A72U

• CAPACITY : 50.4kW (18HP)

Total rated cooling capacity of indoor unit	Outdoor temperature	Indoor temperature															
		20℃CDB / 15℃CWB		23℃CDB / 16℃CWB		24℃CDB / 17℃CWB		26℃CDB / 18℃CWB		27℃CDB / 19℃CWB		28℃CDB / 20℃CWB		30℃CDB / 22℃CWB		32℃CDB / 23℃CWB	
	(℃DB)	TC	PI	TC	PI	TC	PI	TC	PI	TC	PI	TC	PI	TC	PI	TC	PI
75.6 (150%)	10	54.0	7.69	59.4	8.33	64.8	8.98	70.2	10.2	75.6	11.7	77.6	12.0	80.7	12.2	82.2	12.3
	15	54.0	8.09	59.4	9.39	64.8	10.9	70.2	12.5	73.2	13.3	74.6	13.4	77.5	13.6	79.0	13.7
	21	54.0	10.2	59.4	11.9	64.8	13.8	68.1	14.8	69.5	15.0	70.9	15.1	73.6	15.3	75.0	15.5
	23	54.0	11.0	59.4	12.8	64.8	14.9	66.8	15.4	68.2	15.5	69.6	15.6	72.3	15.9	73.7	16.0
	25	54.0	11.9	59.4	13.9	64.3	15.8	65.6	16.0	66.9	16.1	68.3	16.2	71.0	16.5	72.4	16.6
	27	54.0	12.8	59.4	15.0	63.0	16.4	64.3	16.5	65.7	16.7	67.0	16.8	69.6	17.1	70.9	17.3
	30	54.0	14.3	59.4	16.9	61.0	17.3	62.3	17.5	63.6	17.6	64.9	17.8	67.4	18.1	68.7	18.3
	33	54.0	16.3	57.7	18.1	59.0	18.3	60.2	18.5	61.4	18.6	62.7	18.8	65.2	19.1	66.5	19.3
	35	54.0	17.8	56.3	18.8	57.5	19.0	58.8	19.1	60.0	19.3	61.2	19.4	63.7	19.8	65.0	19.9
	37	53.7	19.3	54.9	19.5	56.1	19.6	57.3	19.8	58.5	20.0	59.8	20.1	62.2	20.4	63.5	20.6
	40	51.6	20.3	52.8	20.5	54.0	20.6	55.2	20.8	56.3	21.0	57.5	21.1	60.0	21.4	61.2	21.6
	43	49.5	21.3	50.6	21.5	51.8	21.6	52.9	21.8	54.1	22.0	55.3	22.1	57.7	22.4	58.9	22.6
70.6 (140%)	10	50.4	7.26	55.4	7.86	60.5	8.46	65.5	9.06	70.6	10.3	75.6	11.7	79.1	12.1	80.6	12.2
	15	50.4	7.30	55.4	8.42	60.5	9.67	65.5	11.1	70.6	12.6	73.2	13.3	76.0	13.5	77.5	13.6
	21	50.4	9.20	55.4	10.6	60.5	12.3	65.5	14.1	68.2	14.8	69.6	15.0	72.3	15.2	73.7	15.3
	23	50.4	9.92	55.4	11.5	60.5	13.2	65.5	15.2	67.0	15.4	68.3	15.5	71.0	15.8	72.4	15.9
	25	50.4	10.7	55.4	12.4	60.5	14.3	64.5	15.8	65.8	16.0	67.1	16.1	69.7	16.4	71.1	16.5
	27	50.4	11.5	55.4	13.4	60.5	15.4	63.2	16.4	64.5	16.5	65.8	16.7	68.4	17.0	69.7	17.1
	30	50.4	12.9	55.4	15.0	60.0	17.2	61.3	17.3	62.5	17.5	63.8	17.6	66.3	18.0	67.6	18.1
	33	50.4	14.4	55.4	17.0	58.0	18.2	59.2	18.3	60.4	18.5	61.7	18.7	64.1	19.0	65.4	19.1
	35	50.4	15.8	55.4	18.7	56.6	18.9	57.8	19.0	59.0	19.2	60.2	19.3	62.7	19.6	63.9	19.8
	37	50.4	17.2	54.1	19.4	55.3	19.5	56.4	19.7	57.6	19.8	58.8	20.0	61.2	20.3	62.4	20.5
	40	50.4	19.8	52.0	20.4	53.1	20.5	54.3	20.7	55.5	20.8	56.6	21.0	59.0	21.3	60.2	21.5
	43	48.8	21.2	49.9	21.4	51.0	21.5	52.1	21.7	53.3	21.8	54.4	22.0	56.8	22.3	57.9	22.5
65.5 (130%)	10	46.8	6.83	51.5	7.39	56.2	7.95	60.8	8.50	65.5	9.06	70.2	10.2	77.3	12.0	78.8	12.1
	15	46.8	6.83	51.5	7.53	56.2	8.59	60.8	9.77	65.5	11.1	70.2	12.5	74.4	13.4	75.8	13.5
	21	46.8	8.27	51.5	9.50	56.2	10.9	60.8	12.4	65.5	14.1	68.2	14.8	70.8	15.1	72.2	15.2
	23	46.8	8.91	51.5	10.2	56.2	11.7	60.8	13.4	65.5	15.2	67.0	15.4	69.6	15.6	70.9	15.8
	25	46.8	9.59	51.5	11.0	56.2	12.6	60.8	14.4	64.5	15.8	65.8	16.0	68.4	16.2	69.7	16.4
	27	46.8	10.3	51.5	11.9	56.2	13.6	60.8	15.6	63.3	16.4	64.5	16.5	67.1	16.8	68.4	16.9
	30	46.8	11.5	51.5	13.3	56.2	15.3	60.1	17.2	61.4	17.3	62.6	17.5	65.0	17.8	66.3	18.0
	33	46.8	12.8	51.5	15.0	56.2	17.5	58.1	18.2	59.3	18.4	60.5	18.5	63.0	18.8	64.2	19.0
	35	46.8	13.9	51.5	16.3	55.6	18.7	56.8	18.9	58.0	19.0	59.2	19.2	61.5	19.5	62.7	19.6
	37	46.8	15.2	51.5	17.9	54.3	19.4	55.4	19.5	56.6	19.7	57.8	19.9	60.1	20.2	61.3	20.3
	40	46.8	17.4	51.1	20.3	52.2	20.4	53.4	20.6	54.5	20.7	55.6	20.9	58.0	21.2	59.1	21.3
	43	46.8	20.0	49.1	21.3	50.2	21.4	51.3	21.6	52.4	21.7	53.5	21.9	55.8	22.2	56.9	22.3
60.5 (120%)	10	43.2	6.40	47.5	6.91	51.8	7.43	56.2	7.95	60.5	8.46	64.8	8.98	73.4	11.1	76.8	11.9
	15	43.2	6.40	47.5	6.91	51.8	7.61	56.2	8.59	60.5	9.67	64.8	10.9	72.6	13.2	74.0	13.3
	21	43.2	7.41	47.5	8.45	51.8	9.60	56.2	10.9	60.5	12.3	64.8	13.8	69.2	14.9	70.5	15.0
	23	43.2	7.97	47.5	9.10	51.8	10.4	56.2	11.7	60.5	13.2	64.8	14.9	68.0	15.5	69.3	15.6
	25	43.2	8.57	47.5	9.80	51.8	11.2	56.2	12.6	60.5	14.3	64.3	15.8	66.8	16.1	68.1	16.2
	27	43.2	9.21	47.5	10.5	51.8	12.0	56.2	13.6	60.5	15.4	63.1	16.4	65.6	16.6	66.9	16.8
	30	43.2	10.3	47.5	11.8	51.8	13.4	56.2	15.3	60.1	17.2	61.3	17.3	63.6	17.6	64.9	17.8
	33	43.2	11.4	47.5	13.1	51.8	15.1	56.2	17.5	58.1	18.2	59.3	18.3	61.6	18.6	62.8	18.8
	35	43.2	12.3	47.5	14.3	51.8	16.5	55.6	18.7	56.8	18.9	57.9	19.0	60.3	19.3	61.4	19.5
	37	43.2	13.4	47.5	15.6	51.8	18.1	54.3	19.4	55.4	19.5	56.6	19.7	58.9	20.0	60.0	20.1
	40	43.2	15.2	47.5	17.8	51.2	20.3	52.3	20.4	53.4	20.6	54.5	20.7	56.8	21.0	57.9	21.2
	43	43.2	17.4	47.5	20.5	49.2	21.3	50.3	21.4	51.4	21.6	52.5	21.7	54.7	22.0	55.8	22.2
55.4 (110%)	10	39.6	5.97	43.6	6.44	47.5	6.91	51.5	7.39	55.4	7.86	59.4	8.33	67.3	9.44	71.3	10.5
	15	39.6	5.97	43.6	6.44	47.5	6.91	51.5	7.53	55.4	8.42	59.4	9.39	67.3	11.6	71.3	12.9
	21	39.6	6.62	43.6	7.49	47.5	8.45	51.5	9.50	55.4	10.6	59.4	11.9	67.3	14.7	68.6	14.9
	23	39.6	7.11	43.6	8.06	47.5	9.10	51.5	10.2	55.4	11.5	59.4	12.8	66.2	15.3	67.5	15.4
	25	39.6	7.64	43.6	8.67	47.5	9.80	51.5	11.0	55.4	12.4	59.4	13.9	65.1	15.9	66.3	16.0
	27	39.6	8.20	43.6	9.32	47.5	10.5	51.5	11.9	55.4	13.4	59.4	15.0	63.9	16.5	65.1	16.6
	30	39.6	9.11	43.6	10.4	47.5	11.8	51.5	13.3	55.4	15.0	59.4	16.9	62.1	17.4	63.2	17.6
	33	39.6	10.1	43.6	11.6	47.5	13.1	51.5	15.0	55.4	17.0	57.9	18.2	60.1	18.5	61.3	18.6
	35	39.6	10.9	43.6	12.4	47.5	14.3	51.5	16.3	55.4	18.7	56.6	18.8	58.8	19.1	60.0	19.3
	37	39.6	11.7	43.6	13.5	47.5	15.6	51.5	17.9	54.2	19.4	55.3	19.5	57.5	19.8	58.6	20.0
	40	39.6	13.3	43.6	15.4	47.5	17.8	51.1	20.3	52.2	20.4	53.3	20.5	55.5	20.8	56.6	21.0
	43	39.6	15.1	43.6	17.6	47.5	20.5	49.2	21.3	50.2	21.4	51.3	21.6	53.4	21.9	54.5	22.0

TC : Total Capacity kW.

PI : Power Input kW (Compressor + Outdoor fan motor).

The data is based on the following conditions. Pipe length : 7.5 m; Height difference : 0 m.

MODEL SELECTION

■ MODELS : AJ*A90L + AJ*A72U

• CAPACITY : 50.4kW (18HP)

Total rated cooling capacity of indoor unit	Outdoor temperature	Indoor temperature															
		20℃CDB / 15℃CWB		23℃CDB / 16℃CWB		24℃CDB / 17℃CWB		26℃CDB / 18℃CWB		27℃CDB / 19℃CWB		28℃CDB / 20℃CWB		30℃CDB / 22℃CWB		32℃CDB / 23℃CWB	
	(℃DB)	TC	PI	TC	PI	TC	PI	TC	PI	TC	PI	TC	PI	TC	PI	TC	PI
50.4 (100%)	10	36.0	5.54	39.6	5.97	43.2	6.40	46.8	6.83	50.4	7.26	54.0	7.69	61.2	8.55	64.8	8.98
	15	36.0	5.54	39.6	5.97	43.2	6.40	46.8	6.83	50.4	7.30	54.0	8.09	61.2	9.86	64.8	10.9
	21	36.0	5.88	39.6	6.62	43.2	7.41	46.8	8.27	50.4	9.20	54.0	10.2	61.2	12.5	64.8	13.8
	23	36.0	6.32	39.6	7.11	43.2	7.97	46.8	8.91	50.4	9.92	54.0	11.0	61.2	13.5	64.8	14.9
	25	36.0	6.78	39.6	7.64	43.2	8.57	46.8	9.59	50.4	10.7	54.0	11.9	61.2	14.6	64.3	15.8
	27	36.0	7.27	39.6	8.20	43.2	9.21	46.8	10.3	50.4	11.5	54.0	12.8	61.2	15.8	63.2	16.4
	30	36.0	8.06	39.6	9.11	43.2	10.3	46.8	11.5	50.4	12.9	54.0	14.3	60.3	17.2	61.4	17.4
	33	36.0	8.93	39.6	10.1	43.2	11.4	46.8	12.8	50.4	14.4	54.0	16.3	58.4	18.2	59.6	18.4
	35	36.0	9.56	39.6	10.9	43.2	12.3	46.8	13.9	50.4	15.8	54.0	17.8	57.2	18.9	58.3	19.1
	37	36.0	10.2	39.6	11.7	43.2	13.4	46.8	15.2	50.4	17.2	53.8	19.3	55.9	19.6	57.0	19.8
	40	36.0	11.5	39.6	13.3	43.2	15.2	46.8	17.4	50.4	19.8	51.9	20.4	54.0	20.6	55.0	20.8
	43	36.0	13.1	39.6	15.1	43.2	17.4	46.8	20.0	48.9	21.2	49.9	21.4	52.0	21.7	53.0	21.8
45.4 (90%)	10	32.4	5.11	35.6	5.50	38.9	5.88	42.1	6.27	45.4	6.66	48.6	7.04	55.1	7.82	58.3	8.20
	15	32.4	5.11	35.6	5.50	38.9	5.88	42.1	6.27	45.4	6.66	48.6	7.04	55.1	8.34	58.3	9.12
	21	32.4	5.22	35.6	5.81	38.9	6.46	42.1	7.16	45.4	7.92	48.6	8.73	55.1	10.5	58.3	11.5
	23	32.4	5.59	35.6	6.24	38.9	6.95	42.1	7.71	45.4	8.52	48.6	9.40	55.1	11.4	58.3	12.5
	25	32.4	5.98	35.6	6.70	38.9	7.46	42.1	8.28	45.4	9.17	48.6	10.1	55.1	12.3	58.3	13.4
	27	32.4	6.41	35.6	7.18	38.9	8.01	42.1	8.90	45.4	9.86	48.6	10.9	55.1	13.2	58.3	14.5
	30	32.4	7.09	35.6	7.96	38.9	8.89	42.1	9.90	45.4	11.0	48.6	12.2	55.1	14.8	58.3	16.3
	33	32.4	7.84	35.6	8.82	38.9	9.87	42.1	11.0	45.4	12.3	48.6	13.6	55.1	16.8	57.6	18.1
	35	32.4	8.38	35.6	9.44	38.9	10.6	42.1	11.8	45.4	13.2	48.6	14.8	55.1	18.5	56.4	18.8
	37	32.4	8.96	35.6	10.1	38.9	11.4	42.1	12.8	45.4	14.4	48.6	16.2	54.1	19.4	55.2	19.5
	40	32.4	9.99	35.6	11.4	38.9	12.9	42.1	14.6	45.4	16.5	48.6	18.5	52.3	20.4	53.3	20.5
	43	32.4	11.3	35.6	12.9	38.9	14.7	42.1	16.6	45.4	18.9	48.4	21.2	50.4	21.4	51.4	21.6
40.3 (80%)	10	28.8	4.68	31.7	5.02	34.6	5.37	37.4	5.71	40.3	6.05	43.2	6.40	49.0	7.09	51.8	7.43
	15	28.8	4.68	31.7	5.02	34.6	5.37	37.4	5.71	40.3	6.05	43.2	6.40	49.0	7.09	51.8	7.61
	21	28.8	4.78	31.7	5.13	34.6	5.61	37.4	6.17	40.3	6.77	43.2	7.41	49.0	8.82	51.8	9.60
	23	28.8	4.99	31.7	5.45	34.6	6.02	37.4	6.63	40.3	7.28	43.2	7.97	49.0	9.50	51.8	10.4
	25	28.8	5.25	31.7	5.83	34.6	6.45	37.4	7.11	40.3	7.82	43.2	8.57	49.0	10.2	51.8	11.2
	27	28.8	5.61	31.7	6.24	34.6	6.91	37.4	7.63	40.3	8.40	43.2	9.21	49.0	11.0	51.8	12.0
	30	28.8	6.19	31.7	6.90	34.6	7.66	37.4	8.47	40.3	9.33	43.2	10.3	49.0	12.3	51.8	13.4
	33	28.8	6.83	31.7	7.63	34.6	8.48	37.4	9.39	40.3	10.4	43.2	11.4	49.0	13.7	51.8	15.1
	35	28.8	7.29	31.7	8.15	34.6	9.08	37.4	10.1	40.3	11.1	43.2	12.3	49.0	15.0	51.8	16.5
	37	28.8	7.78	31.7	8.72	34.6	9.72	37.4	10.8	40.3	12.0	43.2	13.4	49.0	16.4	51.8	18.1
	40	28.8	8.59	31.7	9.69	34.6	10.9	37.4	12.2	40.3	13.6	43.2	15.2	49.0	18.8	51.3	20.3
	43	28.8	9.64	31.7	10.9	34.6	12.3	37.4	13.8	40.3	15.5	43.2	17.4	48.5	21.2	49.5	21.3
35.3 (70%)	10	25.2	4.25	27.7	4.55	30.2	4.85	32.8	5.15	35.3	5.45	37.8	5.75	42.8	6.36	45.4	6.66
	15	25.2	4.25	27.7	4.55	30.2	4.85	32.8	5.15	35.3	5.45	37.8	5.75	42.8	6.36	45.4	6.66
	21	25.2	4.34	27.7	4.65	30.2	4.96	32.8	5.27	35.3	5.74	37.8	6.24	42.8	7.33	45.4	7.92
	23	25.2	4.52	27.7	4.85	30.2	5.18	32.8	5.66	35.3	6.17	37.8	6.71	42.8	7.88	45.4	8.52
	25	25.2	4.71	27.7	5.06	30.2	5.54	32.8	6.06	35.3	6.61	37.8	7.20	42.8	8.48	45.4	9.17
	27	25.2	4.90	27.7	5.39	30.2	5.92	32.8	6.49	35.3	7.09	37.8	7.72	42.8	9.11	45.4	9.86
	30	25.2	5.37	27.7	5.94	30.2	6.54	32.8	7.18	35.3	7.86	37.8	8.57	42.8	10.1	45.4	11.0
	33	25.2	5.91	27.7	6.55	30.2	7.22	32.8	7.94	35.3	8.70	37.8	9.51	42.8	11.3	45.4	12.3
	35	25.2	6.29	27.7	6.98	30.2	7.71	32.8	8.49	35.3	9.32	37.8	10.2	42.8	12.1	45.4	13.2
	37	25.2	6.70	27.7	7.45	30.2	8.24	32.8	9.08	35.3	9.98	37.8	10.9	42.8	13.2	45.4	14.4
	40	25.2	7.37	27.7	8.21	30.2	9.13	32.8	10.1	35.3	11.2	37.8	12.4	42.8	15.0	45.4	16.5
	43	25.2	8.18	27.7	9.19	30.2	10.3	32.8	11.4	35.3	12.7	37.8	14.0	42.8	17.1	45.4	18.9
30.2 (60%)	10	21.6	3.82	23.8	4.08	25.9	4.33	28.1	4.59	30.2	4.85	32.4	5.11	36.7	5.62	38.9	5.88
	15	21.6	3.82	23.8	4.08	25.9	4.33	28.1	4.59	30.2	4.85	32.4	5.11	36.7	5.62	38.9	5.88
	21	21.6	3.90	23.8	4.16	25.9	4.43	28.1	4.69	30.2	4.96	32.4	5.22	36.7	6.03	38.9	6.46
	23	21.6	4.05	23.8	4.33	25.9	4.61	28.1	4.89	30.2	5.18	32.4	5.59	36.7	6.47	38.9	6.95
	25	21.6	4.21	23.8	4.51	25.9	4.81	28.1	5.11	30.2	5.54	32.4	5.98	36.7	6.94	38.9	7.46
	27	21.6	4.38	23.8	4.69	25.9	5.03	28.1	5.46	30.2	5.92	32.4	6.41	36.7	7.45	38.9	8.01
	30	21.6	4.64	23.8	5.06	25.9	5.53	28.1	6.02	30.2	6.54	32.4	7.09	36.7	8.26	38.9	8.89
	33	21.6	5.06	23.8	5.56	25.9	6.09	28.1	6.64	30.2	7.22	32.4	7.84	36.7	9.16	38.9	9.87
	35	21.6	5.37	23.8	5.91	25.9	6.48	28.1	7.08	30.2	7.71	32.4	8.38	36.7	9.81	38.9	10.6
	37	21.6	5.71	23.8	6.29	25.9	6.91	28.1	7.56	30.2	8.24	32.4	8.96	36.7	10.5	38.9	11.4
	40	21.6	6.25	23.8	6.91	25.9	7.60	28.1	8.33	30.2	9.13	32.4	9.99	36.7	11.9	38.9	12.9
	43	21.6	6.87	23.8	7.64	25.9	8.46	28.1	9.33	30.2	10.3	32.4	11.3	36.7	13.4	38.9	14.7
25.2 (50%)	10	18.0	3.39	19.8	3.60	21.6	3.82	23.4	4.03	25.2	4.25	27.0	4.46	30.6	4.89	32.4	5.11
	15	18.0	3.39	19.8	3.60	21.6	3.82	23.4	4.03	25.2	4.25	27.0	4.46	30.6	4.89	32.4	5.11
	21	18.0	3.45	19.8	3.67	21.6	3.90	23.4	4.12	25.2	4.34	27.0	4.56	30.6	5.00	32.4	5.22
	23	18.0	3.58	19.8	3.82	21.6	4.05	23.4	4.29	25.2	4.52	27.0	4.75	30.6	5.24	32.4	5.59
	25	18.0	3.72	19.8	3.97	21.6	4.21	23.4	4.46	25.2	4.71	27.0	4.96	30.6	5.61	32.4	5.98
	27	18.0	3.86	19.8	4.12	21.6	4.38	23.4	4.64	25.2	4.90	27.0	5.24	30.6	6.00	32.4	6.41
	30	18.0	4.07	19.8	4.36	21.6	4.64	23.4	4.99	25.2	5.37	27.0	5.78	30.6	6.63	32.4	7.09
	33	18.0	4.30	19.8	4.66	21.6	5.06	23.4	5.47	25.2	5.91	27.0	6.36	30.6	7.32	32.4	7.84
	35	18.0	4.53	19.8	4.94	21.6	5.37	23.4	5.82	25.2	6.29	27.0	6.78	30.6	7.82	32.4	8.38
	37	18.0	4.79	19.8	5.24	21.6	5.71	23.4	6.19	25.2	6.70	27.0	7.23	30.6	8.36	32.4	8.96
	40	18.0	5.22	19.8	5.73	21.6	6.25	23.4	6.80	25.2	7.37	27.0	7.96	30.6	9.27	32.4	9.99
	43	18.0	5.70	19.8	6.26	21.6	6.87	23.4	7.51	25.2	8.18	27.0	8.89	30.6	10.4	32.4	11.3

TC : Total Capacity kW.

PI : Power Input kW (Compressor + Outdoor fan motor).

The data is based on the following conditions. Pipe length : 7.5 m; Height difference : 0 m.

MODEL SELECTION

■ MODELS : AJ*A90L + AJ*A90U

• CAPACITY : 56.0kW (20HP)

Total rated cooling capacity of indoor unit	Outdoor temperature	Indoor temperature															
		20°CDB / 15°CWB		23°CDB / 16°CWB		24°CDB / 17°CWB		26°CDB / 18°CWB		27°CDB / 19°CWB		28°CDB / 20°CWB		30°CDB / 22°CWB		32°CDB / 23°CWB	
	(°CDB)	TC	PI	TC	PI	TC	PI	TC	PI	TC	PI	TC	PI	TC	PI	TC	PI
84.0 (150%)	10	60.0	8.47	66.0	9.19	72.0	9.91	78.0	11.2	84.0	12.9	86.3	13.3	89.6	13.5	91.3	13.7
	15	60.0	8.91	66.0	10.4	72.0	12.0	78.0	13.9	81.3	14.7	82.9	14.8	86.1	15.1	87.8	15.2
	21	60.0	11.3	66.0	13.2	72.0	15.3	75.7	16.5	77.2	16.6	78.7	16.7	81.8	17.0	83.4	17.2
	23	60.0	12.2	66.0	14.2	72.0	16.5	74.3	17.1	75.8	17.2	77.3	17.4	80.4	17.7	81.9	17.8
	25	60.0	13.2	66.0	15.4	71.4	17.6	72.9	17.7	74.4	17.9	75.9	18.0	78.9	18.3	80.4	18.5
	27	60.0	14.2	66.0	16.6	70.0	18.2	71.5	18.4	73.0	18.5	74.4	18.7	77.4	19.0	78.8	19.2
	30	60.0	15.9	66.0	18.8	67.8	19.2	69.2	19.4	70.6	19.6	72.1	19.8	74.9	20.1	76.4	20.3
	33	60.0	18.1	64.1	20.2	65.5	20.4	66.9	20.5	68.3	20.7	69.7	20.9	72.5	21.3	73.9	21.4
	35	60.0	19.8	62.6	20.9	63.9	21.1	65.3	21.3	66.7	21.5	68.0	21.6	70.8	22.0	72.2	22.2
	37	59.7	21.5	61.0	21.7	62.4	21.9	63.7	22.0	65.0	22.2	66.4	22.4	69.1	22.7	70.5	22.9
	40	57.4	22.6	58.7	22.8	60.0	23.0	61.3	23.2	62.6	23.3	63.9	23.5	66.6	23.9	68.0	24.1
	43	55.0	23.8	56.3	23.9	57.5	24.1	58.8	24.3	60.1	24.5	61.4	24.6	64.1	25.0	65.4	25.2
78.4 (140%)	10	56.0	7.98	61.6	8.66	67.2	9.33	72.8	10.0	78.4	11.3	84.0	12.9	87.9	13.4	89.5	13.5
	15	56.0	8.03	61.6	9.28	67.2	10.7	72.8	12.3	78.4	14.0	81.3	14.7	84.5	15.0	86.1	15.1
	21	56.0	10.2	61.6	11.8	67.2	13.6	72.8	15.6	75.8	16.5	77.3	16.6	80.4	16.9	81.9	17.0
	23	56.0	11.0	61.6	12.7	67.2	14.7	72.8	16.9	74.5	17.1	75.9	17.2	78.9	17.5	80.4	17.7
	25	56.0	11.8	61.6	13.7	67.2	15.9	71.6	17.6	73.1	17.7	74.6	17.9	77.5	18.2	79.0	18.3
	27	56.0	12.7	61.6	14.8	67.2	17.1	70.3	18.2	71.7	18.4	73.1	18.5	76.0	18.8	77.5	19.0
	30	56.0	14.3	61.6	16.6	66.7	19.1	68.1	19.3	69.5	19.4	70.9	19.6	73.7	20.0	75.1	20.2
	33	56.0	16.0	61.6	19.0	64.5	20.2	65.8	20.4	67.2	20.6	68.5	20.7	71.3	21.1	72.7	21.3
	35	56.0	17.5	61.6	20.8	62.9	21.0	64.3	21.2	65.6	21.3	66.9	21.5	69.7	21.9	71.0	22.0
	37	56.0	19.2	60.1	21.6	61.4	21.7	62.7	21.9	64.0	22.1	65.3	22.3	68.0	22.6	69.4	22.8
	40	56.0	22.0	57.8	22.7	59.0	22.9	60.3	23.0	61.6	23.2	62.9	23.4	65.6	23.7	66.9	23.9
	43	54.2	23.6	55.4	23.8	56.7	24.0	57.9	24.2	59.2	24.3	60.5	24.5	63.1	24.9	64.4	25.0
72.8 (130%)	10	52.0	7.50	57.2	8.13	62.4	8.75	67.6	9.38	72.8	10.0	78.0	11.2	85.9	13.3	87.5	13.4
	15	52.0	7.50	57.2	8.28	62.4	9.47	67.6	10.8	72.8	12.3	78.0	13.9	82.7	14.8	84.3	15.0
	21	52.0	9.11	57.2	10.5	62.4	12.0	67.6	13.7	72.8	15.6	75.7	16.5	78.7	16.7	80.2	16.9
	23	52.0	9.83	57.2	11.3	62.4	13.0	67.6	14.8	72.8	16.9	74.4	17.1	77.3	17.4	78.8	17.5
	25	52.0	10.6	57.2	12.2	62.4	14.0	67.6	16.0	71.6	17.6	73.1	17.7	76.0	18.0	77.4	18.2
	27	52.0	11.4	57.2	13.2	62.4	15.1	67.6	17.3	70.3	18.2	71.7	18.4	74.6	18.7	76.0	18.8
	30	52.0	12.7	57.2	14.7	62.4	17.0	66.8	19.1	68.2	19.3	69.5	19.5	72.3	19.8	73.6	20.0
	33	52.0	14.2	57.2	16.6	62.4	19.4	64.6	20.2	65.9	20.4	67.3	20.6	69.9	20.9	71.3	21.1
	35	52.0	15.4	57.2	18.2	61.8	20.8	63.1	21.0	64.4	21.2	65.7	21.3	68.4	21.7	69.7	21.9
	37	52.0	16.9	57.2	19.9	60.3	21.6	61.6	21.8	62.9	21.9	64.2	22.1	66.8	22.4	68.1	22.6
	40	52.0	19.3	56.8	22.6	58.0	22.7	59.3	22.9	60.5	23.1	61.8	23.2	64.4	23.6	65.7	23.7
	43	52.0	22.2	54.5	23.7	55.7	23.9	57.0	24.0	58.2	24.2	59.4	24.4	62.0	24.7	63.2	24.9
67.2 (120%)	10	48.0	7.02	52.8	7.60	57.6	8.18	62.4	8.75	67.2	9.33	72.0	9.91	81.6	12.2	85.4	13.2
	15	48.0	7.02	52.8	7.60	57.6	8.37	62.4	9.47	67.2	10.7	72.0	12.0	80.7	14.7	82.2	14.8
	21	48.0	8.15	52.8	9.32	57.6	10.6	62.4	12.0	67.2	13.6	72.0	15.3	76.9	16.6	78.3	16.7
	23	48.0	8.78	52.8	10.1	57.6	11.4	62.4	13.0	67.2	14.7	72.0	16.5	75.6	17.2	77.0	17.3
	25	48.0	9.45	52.8	10.8	57.6	12.3	62.4	14.0	67.2	15.9	71.4	17.6	74.2	17.9	75.7	18.0
	27	48.0	10.2	52.8	11.7	57.6	13.3	62.4	15.1	67.2	17.1	70.1	18.2	72.9	18.5	74.3	18.6
	30	48.0	11.3	52.8	13.0	57.6	14.9	62.4	17.0	66.7	19.1	68.1	19.3	70.7	19.6	72.1	19.8
	33	48.0	12.6	52.8	14.6	57.6	16.8	62.4	19.4	64.6	20.2	65.9	20.4	68.5	20.7	69.8	20.9
	35	48.0	13.6	52.8	15.8	57.6	18.4	61.8	20.8	63.1	21.0	64.4	21.2	67.0	21.5	68.3	21.7
	37	48.0	14.8	52.8	17.3	57.6	20.2	60.3	21.6	61.6	21.8	62.9	21.9	65.4	22.3	66.7	22.4
	40	48.0	16.9	52.8	19.8	56.9	22.6	58.1	22.7	59.3	22.9	60.6	23.1	63.1	23.4	64.4	23.6
	43	48.0	19.3	52.8	22.9	54.7	23.7	55.8	23.9	57.1	24.0	58.3	24.2	60.7	24.5	62.0	24.7
61.6 (110%)	10	44.0	6.54	48.4	7.07	52.8	7.60	57.2	8.13	61.6	8.66	66.0	9.19	74.8	10.4	79.2	11.6
	15	44.0	6.54	48.4	7.07	52.8	7.60	57.2	8.28	61.6	9.28	66.0	10.4	74.8	12.9	79.2	14.3
	21	44.0	7.26	48.4	8.24	52.8	9.32	57.2	10.5	61.6	11.8	66.0	13.2	74.8	16.4	76.2	16.5
	23	44.0	7.82	48.4	8.88	52.8	10.1	57.2	11.3	61.6	12.7	66.0	14.2	73.6	17.0	75.0	17.2
	25	44.0	8.41	48.4	9.56	52.8	10.8	57.2	12.2	61.6	13.7	66.0	15.4	72.3	17.7	73.7	17.8
	27	44.0	9.04	48.4	10.3	52.8	11.7	57.2	13.2	61.6	14.8	66.0	16.6	71.0	18.3	72.4	18.4
	30	44.0	10.1	48.4	11.5	52.8	13.0	57.2	14.7	61.6	16.6	66.0	18.8	69.0	19.4	70.3	19.5
	33	44.0	11.2	48.4	12.8	52.8	14.6	57.2	16.6	61.6	19.0	64.3	20.2	66.8	20.5	68.1	20.7
	35	44.0	12.0	48.4	13.8	52.8	15.8	57.2	18.2	61.6	20.8	62.8	21.0	65.3	21.3	66.6	21.5
	37	44.0	13.0	48.4	15.0	52.8	17.3	57.2	19.9	60.2	21.6	61.4	21.7	63.9	22.1	65.1	22.2
	40	44.0	14.7	48.4	17.1	52.8	19.8	56.8	22.6	58.0	22.7	59.2	22.9	61.6	23.2	62.8	23.4
	43	44.0	16.8	48.4	19.6	52.8	22.9	54.6	23.7	55.8	23.9	57.0	24.0	59.3	24.3	60.5	24.5

TC : Total Capacity kW.

PI : Power Input kW (Compressor + Outdoor fan motor).

The data is based on the following conditions. Pipe length : 7.5 m; Height difference : 0 m.

MODEL SELECTION

■ MODELS : AJ*A90L + AJ*A90U

• CAPACITY : 56.0kW (20HP)

Total rated cooling capacity of indoor unit	Outdoor temperature	Indoor temperature															
		20℃CDB / 15℃CWB		23℃CDB / 16℃CWB		24℃CDB / 17℃CWB		26℃CDB / 18℃CWB		27℃CDB / 19℃CWB		28℃CDB / 20℃CWB		30℃CDB / 22℃CWB		32℃CDB / 23℃CWB	
	(℃DB)	TC	PI	TC	PI	TC	PI	TC	PI	TC	PI	TC	PI	TC	PI	TC	PI
56.0 (100%)	10	40.0	6.06	44.0	6.54	48.0	7.02	52.0	7.50	56.0	7.98	60.0	8.47	68.0	9.43	72.0	9.91
	15	40.0	6.06	44.0	6.54	48.0	7.02	52.0	7.50	56.0	8.03	60.0	8.91	68.0	10.9	72.0	12.0
	21	40.0	6.44	44.0	7.26	48.0	8.15	52.0	9.11	56.0	10.2	60.0	11.3	68.0	13.8	72.0	15.3
	23	40.0	6.93	44.0	7.82	48.0	8.78	52.0	9.83	56.0	11.0	60.0	12.2	68.0	15.0	72.0	16.5
	25	40.0	7.44	44.0	8.41	48.0	9.45	52.0	10.6	56.0	11.8	60.0	13.2	68.0	16.2	71.5	17.6
	27	40.0	7.99	44.0	9.04	48.0	10.2	52.0	11.4	56.0	12.7	60.0	14.2	68.0	17.5	70.2	18.2
	30	40.0	8.88	44.0	10.1	48.0	11.3	52.0	12.7	56.0	14.3	60.0	15.9	67.0	19.1	68.3	19.3
	33	40.0	9.85	44.0	11.2	48.0	12.6	52.0	14.2	56.0	16.0	60.0	18.1	64.9	20.3	66.2	20.4
	35	40.0	10.6	44.0	12.0	48.0	13.6	52.0	15.4	56.0	17.5	60.0	19.8	63.5	21.1	64.8	21.2
	37	40.0	11.3	44.0	13.0	48.0	14.8	52.0	16.9	56.0	19.2	59.7	21.5	62.1	21.8	63.3	22.0
	40	40.0	12.8	44.0	14.7	48.0	16.9	52.0	19.3	56.0	22.0	57.6	22.7	60.0	23.0	61.1	23.1
	43	40.0	14.5	44.0	16.8	48.0	19.3	52.0	22.2	54.3	23.7	55.5	23.8	57.8	24.1	58.9	24.3
50.4 (90%)	10	36.0	5.58	39.6	6.01	43.2	6.44	46.8	6.88	50.4	7.31	54.0	7.74	61.2	8.61	64.8	9.04
	15	36.0	5.58	39.6	6.01	43.2	6.44	46.8	6.88	50.4	7.31	54.0	7.74	61.2	9.19	64.8	10.1
	21	36.0	5.70	39.6	6.36	43.2	7.09	46.8	7.88	50.4	8.72	54.0	9.63	61.2	11.7	64.8	12.8
	23	36.0	6.11	39.6	6.84	43.2	7.63	46.8	8.48	50.4	9.40	54.0	10.4	61.2	12.6	64.8	13.8
	25	36.0	6.55	39.6	7.35	43.2	8.21	46.8	9.13	50.4	10.1	54.0	11.2	61.2	13.6	64.8	14.9
	27	36.0	7.03	39.6	7.89	43.2	8.82	46.8	9.82	50.4	10.9	54.0	12.1	61.2	14.7	64.8	16.1
	30	36.0	7.79	39.6	8.76	43.2	9.81	46.8	10.9	50.4	12.2	54.0	13.5	61.2	16.4	64.8	18.1
	33	36.0	8.63	39.6	9.73	43.2	10.9	46.8	12.2	50.4	13.6	54.0	15.1	61.2	18.7	64.0	20.2
	35	36.0	9.24	39.6	10.4	43.2	11.7	46.8	13.1	50.4	14.7	54.0	16.4	61.2	20.5	62.6	20.9
	37	36.0	9.89	39.6	11.2	43.2	12.6	46.8	14.2	50.4	16.0	54.0	18.0	60.1	21.6	61.3	21.7
	40	36.0	11.0	39.6	12.6	43.2	14.3	46.8	16.2	50.4	18.3	54.0	20.6	58.1	22.7	59.2	22.9
	43	36.0	12.5	39.6	14.3	43.2	16.3	46.8	18.5	50.4	21.0	53.8	23.6	56.0	23.9	57.1	24.0
44.8 (80%)	10	32.0	5.09	35.2	5.48	38.4	5.86	41.6	6.25	44.8	6.63	48.0	7.02	54.4	7.79	57.6	8.18
	15	32.0	5.09	35.2	5.48	38.4	5.86	41.6	6.25	44.8	6.63	48.0	7.02	54.4	7.79	57.6	8.37
	21	32.0	5.21	35.2	5.60	38.4	6.13	41.6	6.76	44.8	7.43	48.0	8.15	54.4	9.73	57.6	10.6
	23	32.0	5.44	35.2	5.95	38.4	6.59	41.6	7.28	44.8	8.00	48.0	8.78	54.4	10.5	57.6	11.4
	25	32.0	5.74	35.2	6.39	38.4	7.08	41.6	7.82	44.8	8.61	48.0	9.45	54.4	11.3	57.6	12.3
	27	32.0	6.14	35.2	6.84	38.4	7.60	41.6	8.40	44.8	9.26	48.0	10.2	54.4	12.2	57.6	13.3
	30	32.0	6.79	35.2	7.58	38.4	8.43	41.6	9.34	44.8	10.3	48.0	11.3	54.4	13.6	57.6	14.9
	33	32.0	7.50	35.2	8.40	38.4	9.35	41.6	10.4	44.8	11.5	48.0	12.6	54.4	15.2	57.6	16.8
	35	32.0	8.02	35.2	8.99	38.4	10.0	41.6	11.1	44.8	12.3	48.0	13.6	54.4	16.7	57.6	18.4
	37	32.0	8.57	35.2	9.62	38.4	10.7	41.6	11.9	44.8	13.3	48.0	14.8	54.4	18.2	57.6	20.2
	40	32.0	9.47	35.2	10.7	38.4	12.1	41.6	13.5	44.8	15.1	48.0	16.9	54.4	20.9	57.0	22.6
	43	32.0	10.7	35.2	12.1	38.4	13.7	41.6	15.4	44.8	17.2	48.0	19.3	53.9	23.6	55.0	23.7
39.2 (70%)	10	28.0	4.61	30.8	4.95	33.6	5.29	36.4	5.62	39.2	5.96	42.0	6.30	47.6	6.97	50.4	7.31
	15	28.0	4.61	30.8	4.95	33.6	5.29	36.4	5.62	39.2	5.96	42.0	6.30	47.6	6.97	50.4	7.31
	21	28.0	4.71	30.8	5.06	33.6	5.41	36.4	5.76	39.2	6.29	42.0	6.84	47.6	8.06	50.4	8.72
	23	28.0	4.92	30.8	5.28	33.6	5.65	36.4	6.19	39.2	6.76	42.0	7.36	47.6	8.68	50.4	9.40
	25	28.0	5.13	30.8	5.52	33.6	6.06	36.4	6.64	39.2	7.26	42.0	7.92	47.6	9.35	50.4	10.1
	27	28.0	5.34	30.8	5.89	33.6	6.49	36.4	7.12	39.2	7.79	42.0	8.50	47.6	10.1	50.4	10.9
	30	28.0	5.87	30.8	6.51	33.6	7.18	36.4	7.90	39.2	8.65	42.0	9.45	47.6	11.2	50.4	12.2
	33	28.0	6.47	30.8	7.18	33.6	7.94	36.4	8.75	39.2	9.60	42.0	10.5	47.6	12.5	50.4	13.6
	35	28.0	6.90	30.8	7.67	33.6	8.49	36.4	9.37	39.2	10.3	42.0	11.3	47.6	13.4	50.4	14.7
	37	28.0	7.36	30.8	8.19	33.6	9.08	36.4	10.0	39.2	11.0	42.0	12.1	47.6	14.6	50.4	16.0
	40	28.0	8.10	30.8	9.05	33.6	10.1	36.4	11.2	39.2	12.4	42.0	13.7	47.6	16.7	50.4	18.3
	43	28.0	9.02	30.8	10.1	33.6	11.4	36.4	12.7	39.2	14.1	42.0	15.6	47.6	19.0	50.4	21.0
33.6 (60%)	10	24.0	4.13	26.4	4.42	28.8	4.71	31.2	5.00	33.6	5.29	36.0	5.58	40.8	6.15	43.2	6.44
	15	24.0	4.13	26.4	4.42	28.8	4.71	31.2	5.00	33.6	5.29	36.0	5.58	40.8	6.15	43.2	6.44
	21	24.0	4.22	26.4	4.51	28.8	4.81	31.2	5.11	33.6	5.41	36.0	5.70	40.8	6.60	43.2	7.09
	23	24.0	4.39	26.4	4.71	28.8	5.02	31.2	5.34	33.6	5.65	36.0	6.11	40.8	7.10	43.2	7.63
	25	24.0	4.57	26.4	4.90	28.8	5.24	31.2	5.58	33.6	6.06	36.0	6.55	40.8	7.63	43.2	8.21
	27	24.0	4.76	26.4	5.11	28.8	5.48	31.2	5.97	33.6	6.49	36.0	7.03	40.8	8.19	43.2	8.82
	30	24.0	5.05	26.4	5.52	28.8	6.05	31.2	6.60	33.6	7.18	36.0	7.79	40.8	9.11	43.2	9.81
	33	24.0	5.52	26.4	6.08	28.8	6.67	31.2	7.29	33.6	7.94	36.0	8.63	40.8	10.1	43.2	10.9
	35	24.0	5.87	26.4	6.48	28.8	7.11	31.2	7.79	33.6	8.49	36.0	9.24	40.8	10.8	43.2	11.7
	37	24.0	6.24	26.4	6.90	28.8	7.59	31.2	8.32	33.6	9.08	36.0	9.89	40.8	11.6	43.2	12.6
	40	24.0	6.85	26.4	7.59	28.8	8.37	31.2	9.19	33.6	10.1	36.0	11.0	40.8	13.2	43.2	14.3
	43	24.0	7.55	26.4	8.41	28.8	9.33	31.2	10.3	33.6	11.4	36.0	12.5	40.8	14.9	43.2	16.3
28.0 (50%)	10	20.0	3.65	22.0	3.89	24.0	4.13	26.0	4.37	28.0	4.61	30.0	4.85	34.0	5.33	36.0	5.58
	15	20.0	3.65	22.0	3.89	24.0	4.13	26.0	4.37	28.0	4.61	30.0	4.85	34.0	5.33	36.0	5.58
	21	20.0	3.72	22.0	3.97	24.0	4.22	26.0	4.46	28.0	4.71	30.0	4.96	34.0	5.46	36.0	5.70
	23	20.0	3.87	22.0	4.13	24.0	4.39	26.0	4.65	28.0	4.92	30.0	5.18	34.0	5.72	36.0	6.11
	25	20.0	4.02	22.0	4.29	24.0	4.57	26.0	4.85	28.0	5.13	30.0	5.40	34.0	6.14	36.0	6.55
	27	20.0	4.17	22.0	4.47	24.0	4.76	26.0	5.05	28.0	5.34	30.0	5.72	34.0	6.57	36.0	7.03
	30	20.0	4.42	22.0	4.73	24.0	5.05	26.0	5.44	28.0	5.87	30.0	6.32	34.0	7.28	36.0	7.79
	33	20.0	4.67	22.0	5.07	24.0	5.52	26.0	5.98	28.0	6.47	30.0	6.98	34.0	8.06	36.0	8.63
	35	20.0	4.92	22.0	5.38	24.0	5.87	26.0	6.37	28.0	6.90	30.0	7.45	34.0	8.62	36.0	9.24
	37	20.0	5.22	22.0	5.72	24.0	6.24	26.0	6.79	28.0	7.36	30.0	7.95	34.0	9.21	36.0	9.89
	40	20.0	5.71	22.0	6.27	24.0	6.85	26.0	7.47	28.0	8.10	30.0	8.77	34.0	10.2	36.0	11.0
	43	20.0	6.24	22.0	6.87	24.0	7.55	26.0	8.27	28.0	9.02	30.0	9.81	34.0	11.5	36.0	12.5

TC : Total Capacity kW.

PI : Power Input kW (Compressor + Outdoor fan motor).

The data is based on the following conditions. Pipe length : 7.5 m; Height difference : 0 m.

MODEL SELECTION

■ MODELS : AJ*126L + AJ*A72U

• CAPACITY : 62.4kW (22HP)

Total rated cooling capacity of indoor unit	Outdoor temperature	Indoor temperature															
		20℃CDB / 15℃CWB		23℃CDB / 16℃CWB		24℃CDB / 17℃CWB		26℃CDB / 18℃CWB		27℃CDB / 19℃CWB		28℃CDB / 20℃CWB		30℃CDB / 22℃CWB		32℃CDB / 23℃CWB	
	(℃DB)	TC	PI	TC	PI	TC	PI	TC	PI	TC	PI	TC	PI	TC	PI	TC	PI
93.6 (150%)	10	66.9	9.77	73.5	10.6	80.2	11.5	86.9	12.9	93.6	14.9	96.2	15.4	100	15.6	102	15.8
	15	66.9	10.3	73.5	12.0	80.2	13.9	86.9	16.0	90.7	17.0	92.5	17.2	96.1	17.5	97.9	17.7
	21	66.9	13.0	73.5	15.2	80.2	17.7	84.3	19.1	86.1	19.3	87.8	19.4	91.3	19.8	93.0	19.9
	23	66.9	14.1	73.5	16.5	80.2	19.2	82.8	19.8	84.5	20.0	86.2	20.2	89.6	20.5	91.3	20.7
	25	66.9	15.2	73.5	17.8	79.6	20.4	81.3	20.6	82.9	20.7	84.6	20.9	88.0	21.3	89.6	21.4
	27	66.9	16.4	73.5	19.3	78.1	21.1	79.7	21.3	81.3	21.5	83.0	21.7	86.2	22.1	87.9	22.3
	30	66.9	18.5	73.5	21.8	75.6	22.4	77.2	22.6	78.7	22.8	80.3	23.0	83.5	23.4	85.1	23.6
	33	66.9	21.0	71.5	23.5	73.0	23.7	74.5	23.9	76.1	24.1	77.6	24.3	80.8	24.7	82.3	24.9
	35	66.9	23.0	69.7	24.4	71.2	24.6	72.7	24.8	74.3	25.0	75.8	25.2	78.9	25.6	80.5	25.8
	37	66.5	25.0	68.0	25.2	69.5	25.4	71.0	25.6	72.5	25.8	74.0	26.1	77.0	26.5	78.6	26.7
	40	63.9	26.3	65.3	26.5	66.8	26.8	68.2	27.0	69.7	27.2	71.2	27.4	74.2	27.8	75.7	28.0
	43	61.2	27.7	62.6	27.9	64.1	28.1	65.5	28.3	66.9	28.5	68.4	28.7	71.3	29.1	72.8	29.3
87.4 (140%)	10	62.4	9.21	68.6	10.0	74.9	10.8	81.1	11.6	87.4	13.1	93.6	14.9	98.0	15.5	99.8	15.6
	15	62.4	9.23	68.6	10.7	74.9	12.3	81.1	14.1	87.4	16.2	90.7	17.0	94.2	17.3	96.0	17.5
	21	62.4	11.7	68.6	13.6	74.9	15.7	81.1	18.0	84.5	19.1	86.2	19.3	89.6	19.6	91.3	19.8
	23	62.4	12.7	68.6	14.7	74.9	17.0	81.1	19.6	83.0	19.9	84.7	20.0	88.0	20.3	89.7	20.5
	25	62.4	13.7	68.6	15.9	74.9	18.4	79.8	20.4	81.5	20.6	83.1	20.8	86.4	21.1	88.1	21.3
	27	62.4	14.7	68.6	17.2	74.9	19.9	78.3	21.2	79.9	21.3	81.5	21.5	84.8	21.9	86.4	22.1
	30	62.4	16.5	68.6	19.3	74.4	22.2	75.9	22.4	77.4	22.6	79.0	22.8	82.1	23.2	83.7	23.4
	33	62.4	18.6	68.6	22.0	71.8	23.5	73.3	23.7	74.8	23.9	76.4	24.1	79.4	24.5	81.0	24.7
	35	62.4	20.3	68.6	24.2	70.1	24.4	71.6	24.6	73.1	24.8	74.6	25.0	77.6	25.4	79.1	25.6
	37	62.4	22.3	66.9	25.1	68.4	25.3	69.8	25.5	71.3	25.7	72.8	25.9	75.8	26.3	77.3	26.5
	40	62.4	25.7	64.3	26.4	65.8	26.6	67.2	26.8	68.6	27.0	70.1	27.2	73.0	27.6	74.5	27.8
	43	60.3	27.5	61.7	27.7	63.1	27.9	64.5	28.1	65.9	28.3	67.3	28.5	70.2	28.9	71.7	29.2
81.1 (130%)	10	57.9	8.65	63.7	9.38	69.5	10.1	75.3	10.8	81.1	11.6	86.9	12.9	95.8	15.3	97.6	15.5
	15	57.9	8.65	63.7	9.52	69.5	10.9	75.3	12.4	81.1	14.1	86.9	16.0	92.2	17.2	94.0	17.3
	21	57.9	10.5	63.7	12.1	69.5	13.9	75.3	15.9	81.1	18.0	84.4	19.1	87.8	19.4	89.4	19.6
	23	57.9	11.3	63.7	13.1	69.5	15.0	75.3	17.2	81.1	19.6	83.0	19.8	86.2	20.2	87.9	20.3
	25	57.9	12.2	63.7	14.1	69.5	16.2	75.3	18.6	79.9	20.4	81.5	20.6	84.7	20.9	86.3	21.1
	27	57.9	13.2	63.7	15.2	69.5	17.5	75.3	20.1	78.4	21.2	79.9	21.3	83.1	21.7	84.7	21.9
	30	57.9	14.7	63.7	17.1	69.5	19.7	74.5	22.2	76.0	22.4	77.5	22.6	80.6	23.0	82.1	23.2
	33	57.9	16.5	63.7	19.3	69.5	22.6	72.0	23.5	73.5	23.7	74.9	23.9	77.9	24.3	79.5	24.5
	35	57.9	17.9	63.7	21.1	68.9	24.2	70.3	24.4	71.8	24.6	73.2	24.8	76.2	25.2	77.7	25.4
	37	57.9	19.6	63.7	23.2	67.2	25.1	68.6	25.3	70.0	25.5	71.5	25.7	74.4	26.1	75.9	26.3
	40	57.9	22.5	63.2	26.3	64.6	26.4	66.0	26.6	67.4	26.8	68.9	27.0	71.7	27.4	73.2	27.6
	43	57.9	25.9	60.7	27.6	62.0	27.8	63.4	28.0	64.8	28.2	66.2	28.4	69.0	28.8	70.4	29.0
74.9 (120%)	10	53.5	8.08	58.8	8.76	64.2	9.44	69.5	10.1	74.9	10.8	80.2	11.5	90.9	14.1	95.2	15.3
	15	53.5	8.08	58.8	8.76	64.2	9.62	69.5	10.9	74.9	12.3	80.2	13.9	90.0	17.0	91.7	17.1
	21	53.5	9.38	58.8	10.7	64.2	12.2	69.5	13.9	74.9	15.7	80.2	17.7	85.7	19.2	87.3	19.4
	23	53.5	10.1	58.8	11.6	64.2	13.2	69.5	15.0	74.9	17.0	80.2	19.2	84.2	20.0	85.8	20.1
	25	53.5	10.9	58.8	12.5	64.2	14.3	69.5	16.2	74.9	18.4	79.6	20.4	82.8	20.7	84.3	20.9
	27	53.5	11.7	58.8	13.5	64.2	15.4	69.5	17.5	74.9	19.9	78.2	21.2	81.3	21.5	82.8	21.7
	30	53.5	13.1	58.8	15.1	64.2	17.3	69.5	19.7	74.4	22.2	75.8	22.4	78.8	22.8	80.3	23.0
	33	53.5	14.6	58.8	16.9	64.2	19.5	69.5	22.6	71.9	23.5	73.4	23.7	76.3	24.1	77.8	24.3
	35	53.5	15.8	58.8	18.4	64.2	21.4	68.9	24.2	70.3	24.4	71.7	24.6	74.6	25.0	76.0	25.2
	37	53.5	17.2	58.8	20.1	64.2	23.5	67.2	25.1	68.6	25.3	70.0	25.5	72.9	25.9	74.3	26.1
	40	53.5	19.6	58.8	23.1	63.4	26.3	64.7	26.5	66.1	26.7	67.5	26.8	70.3	27.2	71.7	27.4
	43	53.5	22.5	58.8	26.7	60.8	27.6	62.2	27.8	63.5	28.0	64.9	28.2	67.6	28.6	69.0	28.8
68.6 (110%)	10	49.0	7.52	53.9	8.14	58.8	8.76	63.7	9.38	68.6	10.0	73.5	10.6	83.3	12.0	88.3	13.3
	15	49.0	7.52	53.9	8.14	58.8	8.76	63.7	9.52	68.6	10.7	73.5	12.0	83.3	14.8	88.3	16.5
	21	49.0	8.35	53.9	9.49	58.8	10.7	63.7	12.1	68.6	13.6	73.5	15.2	83.3	19.0	85.0	19.2
	23	49.0	9.00	53.9	10.2	58.8	11.6	63.7	13.1	68.6	14.7	73.5	16.5	82.0	19.8	83.6	19.9
	25	49.0	9.69	53.9	11.0	58.8	12.5	63.7	14.1	68.6	15.9	73.5	17.8	80.6	20.5	82.1	20.7
	27	49.0	10.4	53.9	11.9	58.8	13.5	63.7	15.2	68.6	17.2	73.5	19.3	79.2	21.3	80.7	21.4
	30	49.0	11.6	53.9	13.3	58.8	15.1	63.7	17.1	68.6	19.3	73.5	21.8	76.9	22.5	78.3	22.7
	33	49.0	12.9	53.9	14.8	58.8	16.9	63.7	19.3	68.6	22.0	71.6	23.5	74.4	23.9	75.9	24.1
	35	49.0	13.9	53.9	16.0	58.8	18.4	63.7	21.1	68.6	24.2	70.0	24.4	72.8	24.8	74.2	25.0
	37	49.0	15.0	53.9	17.4	58.8	20.1	63.7	23.2	67.0	25.1	68.4	25.3	71.2	25.7	72.5	25.9
	40	49.0	17.1	53.9	19.9	58.8	23.1	63.3	26.3	64.6	26.4	65.9	26.6	68.6	27.0	70.0	27.2
	43	49.0	19.5	53.9	22.8	58.8	26.7	60.8	27.6	62.1	27.8	63.4	28.0	66.1	28.4	67.4	28.5

TC : Total Capacity kW.

PI : Power Input kW (Compressor + Outdoor fan motor).

The data is based on the following conditions. Pipe length : 7.5 m; Height difference : 0 m.

MODEL SELECTION

■ MODELS : AJ*126L + AJ*A72U

• CAPACITY : 62.4kW (22HP)

Total rated cooling capacity of indoor unit	Outdoor temperature	Indoor temperature															
		20℃CDB / 15℃CWB		23℃CDB / 16℃CWB		24℃CDB / 17℃CWB		26℃CDB / 18℃CWB		27℃CDB / 19℃CWB		28℃CDB / 20℃CWB		30℃CDB / 22℃CWB		32℃CDB / 23℃CWB	
	(℃DB)	TC	PI	TC	PI	TC	PI	TC	PI	TC	PI	TC	PI	TC	PI	TC	PI
62.4 (100%)	10	44.6	6.96	49.0	7.52	53.5	8.08	57.9	8.65	62.4	9.21	66.9	9.77	75.8	10.9	80.2	11.5
	15	44.6	6.96	49.0	7.52	53.5	8.08	57.9	8.65	62.4	9.23	66.9	10.3	75.8	12.6	80.2	13.9
	21	44.6	7.39	49.0	8.35	53.5	9.38	57.9	10.5	62.4	11.7	66.9	13.0	75.8	16.0	80.2	17.7
	23	44.6	7.96	49.0	9.00	53.5	10.1	57.9	11.3	62.4	12.7	66.9	14.1	75.8	17.3	80.2	19.2
	25	44.6	8.56	49.0	9.69	53.5	10.9	57.9	12.2	62.4	13.7	66.9	15.2	75.8	18.8	79.7	20.4
	27	44.6	9.20	49.0	10.4	53.5	11.7	57.9	13.2	62.4	14.7	66.9	16.4	75.8	20.3	78.3	21.2
	30	44.6	10.2	49.0	11.6	53.5	13.1	57.9	14.7	62.4	16.5	66.9	18.5	74.7	22.2	76.1	22.4
	33	44.6	11.4	49.0	12.9	53.5	14.6	57.9	16.5	62.4	18.6	66.9	21.0	72.4	23.6	73.7	23.8
	35	44.6	12.2	49.0	13.9	53.5	15.8	57.9	17.9	62.4	20.3	66.9	23.0	70.8	24.5	72.1	24.7
	37	44.6	13.1	49.0	15.0	53.5	17.2	57.9	19.6	62.4	22.3	66.5	25.0	69.2	25.4	70.5	25.6
	40	44.6	14.8	49.0	17.1	53.5	19.6	57.9	22.5	62.4	25.7	64.2	26.4	66.8	26.8	68.1	26.9
	43	44.6	16.8	49.0	19.5	53.5	22.5	57.9	25.9	60.5	27.6	61.8	27.7	64.3	28.1	65.6	28.3
56.2 (90%)	10	40.1	6.40	44.1	6.90	48.1	7.41	52.1	7.92	56.2	8.42	60.2	8.93	68.2	9.94	72.2	10.5
	15	40.1	6.40	44.1	6.90	48.1	7.41	52.1	7.92	56.2	8.42	60.2	8.93	68.2	10.6	72.2	11.6
	21	40.1	6.55	44.1	7.30	48.1	8.15	52.1	9.06	56.2	10.0	60.2	11.1	68.2	13.5	72.2	14.8
	23	40.1	7.01	44.1	7.86	48.1	8.78	52.1	9.77	56.2	10.8	60.2	12.0	68.2	14.5	72.2	16.0
	25	40.1	7.53	44.1	8.46	48.1	9.45	52.1	10.5	56.2	11.7	60.2	12.9	68.2	15.7	72.2	17.3
	27	40.1	8.08	44.1	9.09	48.1	10.2	52.1	11.3	56.2	12.6	60.2	13.9	68.2	17.0	72.2	18.7
	30	40.1	8.97	44.1	10.1	48.1	11.3	52.1	12.7	56.2	14.1	60.2	15.6	68.2	19.1	72.2	21.1
	33	40.1	9.96	44.1	11.2	48.1	12.6	52.1	14.1	56.2	15.7	60.2	17.5	68.2	21.8	71.3	23.4
	35	40.1	10.7	44.1	12.1	48.1	13.6	52.1	15.2	56.2	17.0	60.2	19.1	68.2	23.9	69.8	24.4
	37	40.1	11.4	44.1	12.9	48.1	14.6	52.1	16.5	56.2	18.6	60.2	20.9	67.0	25.1	68.3	25.3
	40	40.1	12.8	44.1	14.6	48.1	16.6	52.1	18.8	56.2	21.3	60.2	24.0	64.7	26.5	65.9	26.6
	43	40.1	14.5	44.1	16.6	48.1	18.9	52.1	21.5	56.2	24.5	59.9	27.5	62.3	27.8	63.6	28.0
49.9 (80%)	10	35.7	5.83	39.2	6.28	42.8	6.73	46.4	7.18	49.9	7.63	53.5	8.08	60.6	8.98	64.2	9.44
	15	35.7	5.83	39.2	6.28	42.8	6.73	46.4	7.18	49.9	7.63	53.5	8.08	60.6	8.98	64.2	9.62
	21	35.7	5.97	39.2	6.43	42.8	7.03	46.4	7.76	49.9	8.55	53.5	9.38	60.6	11.2	64.2	12.2
	23	35.7	6.24	39.2	6.82	42.8	7.57	46.4	8.36	49.9	9.21	53.5	10.1	60.6	12.1	64.2	13.2
	25	35.7	6.57	39.2	7.33	42.8	8.14	46.4	9.00	49.9	9.92	53.5	10.9	60.6	13.1	64.2	14.3
	27	35.7	7.05	39.2	7.87	42.8	8.74	46.4	9.68	49.9	10.7	53.5	11.7	60.6	14.1	64.2	15.4
	30	35.7	7.81	39.2	8.73	42.8	9.72	46.4	10.8	49.9	11.9	53.5	13.1	60.6	15.8	64.2	17.3
	33	35.7	8.64	39.2	9.68	42.8	10.8	46.4	12.0	49.9	13.3	53.5	14.6	60.6	17.7	64.2	19.5
	35	35.7	9.24	39.2	10.4	42.8	11.6	46.4	12.9	49.9	14.3	53.5	15.8	60.6	19.3	64.2	21.4
	37	35.7	9.89	39.2	11.1	42.8	12.4	46.4	13.8	49.9	15.4	53.5	17.2	60.6	21.2	64.2	23.5
	40	35.7	10.9	39.2	12.4	42.8	14.0	46.4	15.7	49.9	17.6	53.5	19.6	60.6	24.4	63.5	26.3
	43	35.7	12.3	39.2	14.0	42.8	15.8	46.4	17.8	49.9	20.1	53.5	22.5	60.0	27.5	61.2	27.7
43.7 (70%)	10	31.2	5.27	34.3	5.66	37.4	6.06	40.6	6.45	43.7	6.85	46.8	7.24	53.0	8.03	56.2	8.42
	15	31.2	5.27	34.3	5.66	37.4	6.06	40.6	6.45	43.7	6.85	46.8	7.24	53.0	8.03	56.2	8.42
	21	31.2	5.39	34.3	5.79	37.4	6.20	40.6	6.61	43.7	7.21	46.8	7.86	53.0	9.27	56.2	10.0
	23	31.2	5.63	34.3	6.05	37.4	6.48	40.6	7.10	43.7	7.76	46.8	8.47	53.0	10.0	56.2	10.8
	25	31.2	5.87	34.3	6.33	37.4	6.95	40.6	7.63	43.7	8.35	46.8	9.11	53.0	10.8	56.2	11.7
	27	31.2	6.13	34.3	6.75	37.4	7.45	40.6	8.19	43.7	8.97	46.8	9.80	53.0	11.6	56.2	12.6
	30	31.2	6.73	34.3	7.48	37.4	8.26	40.6	9.10	43.7	9.98	46.8	10.9	53.0	13.0	56.2	14.1
	33	31.2	7.43	34.3	8.27	37.4	9.15	40.6	10.1	43.7	11.1	46.8	12.2	53.0	14.5	56.2	15.7
	35	31.2	7.94	34.3	8.84	37.4	9.80	40.6	10.8	43.7	11.9	46.8	13.0	53.0	15.6	56.2	17.0
	37	31.2	8.47	34.3	9.45	37.4	10.5	40.6	11.6	43.7	12.8	46.8	14.0	53.0	17.0	56.2	18.6
	40	31.2	9.35	34.3	10.5	37.4	11.7	40.6	13.0	43.7	14.4	46.8	15.9	53.0	19.3	56.2	21.3
	43	31.2	10.4	34.3	11.7	37.4	13.2	40.6	14.7	43.7	16.3	46.8	18.1	53.0	22.2	56.2	24.5
37.4 (60%)	10	26.7	4.71	29.4	5.04	32.1	5.38	34.8	5.72	37.4	6.06	40.1	6.40	45.5	7.07	48.1	7.41
	15	26.7	4.71	29.4	5.04	32.1	5.38	34.8	5.72	37.4	6.06	40.1	6.40	45.5	7.07	48.1	7.41
	21	26.7	4.81	29.4	5.15	32.1	5.50	34.8	5.85	37.4	6.20	40.1	6.55	45.5	7.58	48.1	8.15
	23	26.7	5.01	29.4	5.38	32.1	5.75	34.8	6.12	37.4	6.48	40.1	7.01	45.5	8.16	48.1	8.78
	25	26.7	5.22	29.4	5.61	32.1	6.00	34.8	6.40	37.4	6.95	40.1	7.53	45.5	8.78	48.1	9.45
	27	26.7	5.44	29.4	5.85	32.1	6.28	34.8	6.85	37.4	7.45	40.1	8.08	45.5	9.44	48.1	10.2
	30	26.7	5.78	29.4	6.33	32.1	6.94	34.8	7.58	37.4	8.26	40.1	8.97	45.5	10.5	48.1	11.3
	33	26.7	6.32	29.4	6.98	32.1	7.67	34.8	8.39	37.4	9.15	40.1	9.96	45.5	11.7	48.1	12.6
	35	26.7	6.73	29.4	7.44	32.1	8.19	34.8	8.97	37.4	9.80	40.1	10.7	45.5	12.5	48.1	13.6
	37	26.7	7.17	29.4	7.94	32.1	8.75	34.8	9.59	37.4	10.5	40.1	11.4	45.5	13.5	48.1	14.6
	40	26.7	7.89	29.4	8.75	32.1	9.66	34.8	10.6	37.4	11.7	40.1	12.8	45.5	15.3	48.1	16.6
	43	26.7	8.70	29.4	9.71	32.1	10.8	34.8	11.9	37.4	13.2	40.1	14.5	45.5	17.3	48.1	18.9
31.2 (50%)	10	22.3	4.14	24.5	4.43	26.7	4.71	29.0	4.99	31.2	5.27	33.4	5.55	37.9	6.11	40.1	6.40
	15	22.3	4.14	24.5	4.43	26.7	4.71	29.0	4.99	31.2	5.27	33.4	5.55	37.9	6.11	40.1	6.40
	21	22.3	4.23	24.5	4.52	26.7	4.81	29.0	5.10	31.2	5.39	33.4	5.68	37.9	6.26	40.1	6.55
	23	22.3	4.40	24.5	4.70	26.7	5.01	29.0	5.32	31.2	5.63	33.4	5.93	37.9	6.56	40.1	7.01
	25	22.3	4.57	24.5	4.90	26.7	5.22	29.0	5.55	31.2	5.87	33.4	6.20	37.9	7.04	40.1	7.53
	27	22.3	4.76	24.5	5.10	26.7	5.44	29.0	5.78	31.2	6.13	33.4	6.56	37.9	7.55	40.1	8.08
	30	22.3	5.04	24.5	5.41	26.7	5.78	29.0	6.23	31.2	6.73	33.4	7.26	37.9	8.38	40.1	8.97
	33	22.3	5.34	24.5	5.80	26.7	6.32	29.0	6.86	31.2	7.43	33.4	8.02	37.9	9.28	40.1	9.96
	35	22.3	5.63	24.5	6.17	26.7	6.73	29.0	7.32	31.2	7.94	33.4	8.58	37.9	9.94	40.1	10.7
	37	22.3	5.98	24.5	6.56	26.7	7.17	29.0	7.81	31.2	8.47	33.4	9.16	37.9	10.6	40.1	11.4
	40	22.3	6.54	24.5	7.20	26.7	7.89	29.0	8.60	31.2	9.35	33.4	10.1	37.9	11.8	40.1	12.8
	43	22.3	7.17	24.5	7.91	26.7	8.70	29.0	9.54	31.2	10.4	33.4	11.4	37.9	13.4	40.1	14.5

TC : Total Capacity kW.

PI : Power Input kW (Compressor + Outdoor fan motor).

The data is based on the following conditions. Pipe length : 7.5 m; Height difference : 0 m.

MODEL SELECTION

■ MODELS : AJ*126L + AJ*A90U

• CAPACITY : 68.0kW (24HP)

Total rated cooling capacity of indoor unit	Outdoor temperature	Indoor temperature															
		20℃CDB / 15℃CWB		23℃CDB / 16℃CWB		24℃CDB / 17℃CWB		26℃CDB / 18℃CWB		27℃CDB / 19℃CWB		28℃CDB / 20℃CWB		30℃CDB / 22℃CWB		32℃CDB / 23℃CWB	
	(℃DB)	TC	PI	TC	PI	TC	PI	TC	PI	TC	PI	TC	PI	TC	PI	TC	PI
102 (150%)	10	72.9	10.6	80.1	11.5	87.4	12.4	94.7	14.0	102	16.1	104	16.6	108	17.0	110	17.1
	15	72.9	11.1	80.1	12.9	87.4	15.0	94.7	17.4	98.8	18.5	100	18.7	104	19.0	106	19.2
	21	72.9	14.1	80.1	16.5	87.4	19.2	91.9	20.7	93.8	20.9	95.7	21.1	99.4	21.4	101	21.6
	23	72.9	15.3	80.1	17.9	87.4	20.8	90.2	21.5	92.1	21.7	93.9	21.9	97.7	22.3	99.5	22.5
	25	72.9	16.5	80.1	19.3	86.7	22.2	88.5	22.3	90.4	22.5	92.2	22.7	95.8	23.1	97.7	23.3
	27	72.9	17.8	80.1	20.9	85.1	23.0	86.8	23.2	88.6	23.3	90.4	23.5	94.0	24.0	95.8	24.2
	30	72.9	20.0	80.1	23.7	82.4	24.3	84.1	24.5	85.8	24.7	87.5	25.0	91.0	25.4	92.8	25.7
	33	72.9	22.8	77.9	25.5	79.5	25.7	81.2	26.0	82.9	26.2	84.6	26.4	88.0	26.9	89.7	27.1
	35	72.9	25.0	76.0	26.5	77.6	26.7	79.3	26.9	80.9	27.1	82.6	27.4	86.0	27.8	87.7	28.1
	37	72.5	27.2	74.1	27.4	75.7	27.7	77.3	27.9	79.0	28.1	80.6	28.3	83.9	28.8	85.6	29.0
	40	69.6	28.6	71.2	28.9	72.8	29.1	74.4	29.3	76.0	29.5	77.6	29.8	80.9	30.2	82.5	30.5
	43	66.7	30.1	68.3	30.3	69.8	30.5	71.4	30.8	72.9	31.0	74.5	31.2	77.7	31.7	79.4	31.9
95.2 (140%)	10	68.0	9.94	74.8	10.8	81.6	11.7	88.4	12.5	95.2	14.1	102	16.1	106	16.8	108	16.9
	15	68.0	9.96	74.8	11.5	81.6	13.3	88.4	15.3	95.2	17.5	98.9	18.5	102	18.8	104	19.0
	21	68.0	12.7	74.8	14.7	81.6	17.0	88.4	19.6	92.1	20.7	93.9	20.9	97.6	21.3	99.5	21.5
	23	68.0	13.7	74.8	15.9	81.6	18.4	88.4	21.2	90.5	21.6	92.3	21.7	95.9	22.1	97.7	22.3
	25	68.0	14.8	74.8	17.2	81.6	19.9	87.0	22.2	88.8	22.4	90.6	22.6	94.2	22.9	96.0	23.1
	27	68.0	16.0	74.8	18.6	81.6	21.6	85.3	23.0	87.1	23.2	88.9	23.4	92.4	23.8	94.1	24.0
	30	68.0	17.9	74.8	20.9	81.0	24.1	82.7	24.3	84.4	24.6	86.1	24.8	89.5	25.2	91.2	25.4
	33	68.0	20.2	74.8	23.9	78.3	25.6	79.9	25.8	81.5	26.0	83.2	26.2	86.6	26.7	88.2	26.9
	35	68.0	22.1	74.8	26.3	76.4	26.5	78.0	26.7	79.6	27.0	81.3	27.2	84.6	27.6	86.2	27.9
	37	68.0	24.2	72.9	27.3	74.5	27.5	76.1	27.7	77.7	27.9	79.3	28.2	82.6	28.6	84.2	28.8
	40	68.0	27.9	70.1	28.7	71.7	28.9	73.2	29.2	74.8	29.4	76.4	29.6	79.6	30.0	81.2	30.3
	43	65.7	29.9	67.2	30.2	68.8	30.4	70.3	30.6	71.8	30.8	73.4	31.0	76.5	31.5	78.1	31.7
88.4 (130%)	10	63.1	9.32	69.5	10.1	75.8	10.9	82.1	11.7	88.4	12.5	94.7	14.0	104	16.6	106	16.8
	15	63.1	9.32	69.5	10.3	75.8	11.8	82.1	13.5	88.4	15.3	94.7	17.4	100	18.6	102	18.8
	21	63.1	11.4	69.5	13.1	75.8	15.0	82.1	17.2	88.4	19.6	92.0	20.7	95.6	21.1	97.4	21.3
	23	63.1	12.3	69.5	14.2	75.8	16.3	82.1	18.6	88.4	21.2	90.4	21.6	94.0	21.9	95.8	22.1
	25	63.1	13.2	69.5	15.3	75.8	17.6	82.1	20.2	87.0	22.2	88.8	22.4	92.3	22.7	94.0	22.9
	27	63.1	14.3	69.5	16.5	75.8	19.0	82.1	21.8	85.4	23.0	87.1	23.2	90.6	23.6	92.3	23.8
	30	63.1	16.0	69.5	18.5	75.8	21.4	81.2	24.1	82.8	24.3	84.5	24.6	87.8	25.0	89.5	25.2
	33	63.1	17.9	69.5	20.9	75.8	24.5	78.4	25.6	80.1	25.8	81.7	26.0	84.9	26.5	86.6	26.7
	35	63.1	19.5	69.5	22.9	75.0	26.3	76.6	26.6	78.2	26.8	79.8	27.0	83.0	27.4	84.6	27.6
	37	63.1	21.3	69.5	25.2	73.2	27.3	74.8	27.5	76.3	27.7	77.9	28.0	81.1	28.4	82.7	28.6
	40	63.1	24.4	68.9	28.5	70.4	28.8	71.9	29.0	73.5	29.2	75.0	29.4	78.2	29.8	79.7	30.1
	43	63.1	28.2	66.1	30.0	67.6	30.2	69.1	30.4	70.6	30.6	72.1	30.9	75.2	31.3	76.7	31.5
81.6 (120%)	10	58.3	8.71	64.1	9.44	69.9	10.2	75.8	10.9	81.6	11.7	87.4	12.4	99.1	15.3	103	16.6
	15	58.3	8.71	64.1	9.44	69.9	10.4	75.8	11.8	81.6	13.3	87.4	15.0	98.1	18.4	99.9	18.6
	21	58.3	10.1	64.1	11.6	69.9	13.2	75.8	15.0	81.6	17.0	87.4	19.2	93.4	20.9	95.2	21.0
	23	58.3	10.9	64.1	12.5	69.9	14.3	75.8	16.3	81.6	18.4	87.4	20.8	91.8	21.7	93.5	21.9
	25	58.3	11.8	64.1	13.5	69.9	15.5	75.8	17.6	81.6	19.9	86.8	22.2	90.2	22.5	91.9	22.7
	27	58.3	12.7	64.1	14.6	69.9	16.7	75.8	19.0	81.6	21.6	85.2	23.0	88.6	23.3	90.2	23.5
	30	58.3	14.2	64.1	16.4	69.9	18.7	75.8	21.4	81.1	24.1	82.7	24.3	85.9	24.8	87.5	25.0
	33	58.3	15.9	64.1	18.3	69.9	21.2	75.8	24.5	78.4	25.6	80.0	25.8	83.1	26.2	84.7	26.4
	35	58.3	17.1	64.1	20.0	69.9	23.2	75.1	26.3	76.6	26.6	78.2	26.8	81.3	27.2	82.9	27.4
	37	58.3	18.6	64.1	21.8	69.9	25.5	73.3	27.3	74.8	27.5	76.3	27.7	79.4	28.2	81.0	28.4
	40	58.3	21.3	64.1	25.1	69.0	28.6	70.5	28.8	72.0	29.0	73.5	29.2	76.6	29.6	78.1	29.8
	43	58.3	24.4	64.1	29.0	66.3	30.0	67.8	30.2	69.2	30.4	70.7	30.7	73.7	31.1	75.2	31.3
74.8 (110%)	10	53.4	8.09	58.8	8.77	64.1	9.44	69.5	10.1	74.8	10.8	80.1	11.5	90.8	13.0	96.2	14.4
	15	53.4	8.09	58.8	8.77	64.1	9.44	69.5	10.3	74.8	11.5	80.1	12.9	90.8	16.1	96.2	17.9
	21	53.4	8.99	58.8	10.2	64.1	11.6	69.5	13.1	74.8	14.7	80.1	16.5	90.8	20.6	92.6	20.8
	23	53.4	9.70	58.8	11.1	64.1	12.5	69.5	14.2	74.8	15.9	80.1	17.9	89.4	21.5	91.1	21.6
	25	53.4	10.5	58.8	11.9	64.1	13.5	69.5	15.3	74.8	17.2	80.1	19.3	87.9	22.3	89.5	22.4
	27	53.4	11.3	58.8	12.9	64.1	14.6	69.5	16.5	74.8	18.6	80.1	20.9	86.3	23.1	87.9	23.3
	30	53.4	12.6	58.8	14.4	64.1	16.4	69.5	18.5	74.8	20.9	80.1	23.7	83.8	24.5	85.4	24.7
	33	53.4	14.0	58.8	16.1	64.1	18.3	69.5	20.9	74.8	23.9	78.1	25.5	81.1	25.9	82.7	26.2
	35	53.4	15.1	58.8	17.3	64.1	20.0	69.5	22.9	74.8	26.3	76.3	26.5	79.3	26.9	80.9	27.1
	37	53.4	16.3	58.8	18.9	64.1	21.8	69.5	25.2	73.0	27.3	74.5	27.5	77.5	27.9	79.1	28.1
	40	53.4	18.5	58.8	21.6	64.1	25.1	68.9	28.6	70.4	28.8	71.8	29.0	74.8	29.4	76.3	29.6
	43	53.4	21.2	58.8	24.8	64.1	29.0	66.3	30.0	67.7	30.2	69.1	30.4	72.0	30.8	73.5	31.1

TC : Total Capacity kW.

PI : Power Input kW (Compressor + Outdoor fan motor).

The data is based on the following conditions. Pipe length : 7.5 m; Height difference : 0 m.

MODEL SELECTION

■ MODELS : AJ*126L + AJ*A90U

• CAPACITY : 68.0kW (24HP)

Total rated cooling capacity of indoor unit	Outdoor temperature	Indoor temperature															
		20℃CDB / 15℃CWB		23℃CDB / 16℃CWB		24℃CDB / 17℃CWB		26℃CDB / 18℃CWB		27℃CDB / 19℃CWB		28℃CDB / 20℃CWB		30℃CDB / 22℃CWB		32℃CDB / 23℃CWB	
	(℃DB)	TC	PI	TC	PI	TC	PI	TC	PI	TC	PI	TC	PI	TC	PI	TC	PI
68.0 (100%)	10	48.6	7.48	53.4	8.09	58.3	8.71	63.1	9.32	68.0	9.94	72.9	10.6	82.6	11.8	87.4	12.4
	15	48.6	7.48	53.4	8.09	58.3	8.71	63.1	9.32	68.0	9.96	72.9	11.1	82.6	13.6	87.4	15.0
	21	48.6	7.95	53.4	8.99	58.3	10.1	63.1	11.4	68.0	12.7	72.9	14.1	82.6	17.4	87.4	19.2
	23	48.6	8.57	53.4	9.70	58.3	10.9	63.1	12.3	68.0	13.7	72.9	15.3	82.6	18.8	87.4	20.8
	25	48.6	9.23	53.4	10.5	58.3	11.8	63.1	13.2	68.0	14.8	72.9	16.5	82.6	20.4	86.8	22.2
	27	48.6	9.93	53.4	11.3	58.3	12.7	63.1	14.3	68.0	16.0	72.9	17.8	82.6	22.1	85.3	23.0
	30	48.6	11.1	53.4	12.6	58.3	14.2	63.1	16.0	68.0	17.9	72.9	20.0	81.4	24.2	82.9	24.4
	33	48.6	12.3	53.4	14.0	58.3	15.9	63.1	17.9	68.0	20.2	72.9	22.8	78.9	25.6	80.4	25.8
	35	48.6	13.2	53.4	15.1	58.3	17.1	63.1	19.5	68.0	22.1	72.9	25.0	77.1	26.6	78.6	26.8
	37	48.6	14.2	53.4	16.3	58.3	18.6	63.1	21.3	68.0	24.2	72.5	27.2	75.4	27.6	76.9	27.8
	40	48.6	16.1	53.4	18.5	58.3	21.3	63.1	24.4	68.0	27.9	69.9	28.7	72.8	29.1	74.2	29.3
	43	48.6	18.2	53.4	21.2	58.3	24.4	63.1	28.2	65.9	30.0	67.3	30.2	70.1	30.6	71.5	30.8
61.2 (90%)	10	43.7	6.86	48.1	7.42	52.5	7.97	56.8	8.52	61.2	9.08	65.6	9.63	74.3	10.7	78.7	11.3
	15	43.7	6.86	48.1	7.42	52.5	7.97	56.8	8.52	61.2	9.08	65.6	9.63	74.3	11.4	78.7	12.5
	21	43.7	7.03	48.1	7.85	52.5	8.78	56.8	9.77	61.2	10.8	65.6	12.0	74.3	14.6	78.7	16.0
	23	43.7	7.53	48.1	8.46	52.5	9.47	56.8	10.6	61.2	11.7	65.6	13.0	74.3	15.8	78.7	17.3
	25	43.7	8.10	48.1	9.11	52.5	10.2	56.8	11.4	61.2	12.6	65.6	14.0	74.3	17.0	78.7	18.7
	27	43.7	8.70	48.1	9.80	52.5	11.0	56.8	12.3	61.2	13.6	65.6	15.1	74.3	18.4	78.7	20.3
	30	43.7	9.68	48.1	10.9	52.5	12.3	56.8	13.7	61.2	15.3	65.6	16.9	74.3	20.7	78.7	22.9
	33	43.7	10.8	48.1	12.2	52.5	13.7	56.8	15.3	61.2	17.1	65.6	19.0	74.3	23.6	77.7	25.5
	35	43.7	11.5	48.1	13.0	52.5	14.7	56.8	16.5	61.2	18.5	65.6	20.7	74.3	26.0	76.1	26.5
	37	43.7	12.4	48.1	14.0	52.5	15.8	56.8	17.9	61.2	20.2	65.6	22.7	73.0	27.3	74.4	27.5
	40	43.7	13.8	48.1	15.8	52.5	18.0	56.8	20.4	61.2	23.1	65.6	26.1	70.5	28.8	71.9	29.0
	43	43.7	15.7	48.1	18.0	52.5	20.5	56.8	23.4	61.2	26.6	65.2	29.9	67.9	30.3	69.3	30.5
54.4 (80%)	10	38.9	6.25	42.7	6.74	46.6	7.23	50.5	7.72	54.4	8.21	58.3	8.71	66.1	9.69	69.9	10.2
	15	38.9	6.25	42.7	6.74	46.6	7.23	50.5	7.72	54.4	8.21	58.3	8.71	66.1	9.69	69.9	10.4
	21	38.9	6.39	42.7	6.90	46.6	7.56	50.5	8.36	54.4	9.21	58.3	10.1	66.1	12.1	69.9	13.2
	23	38.9	6.69	42.7	7.33	46.6	8.14	50.5	9.01	54.4	9.94	58.3	10.9	66.1	13.1	69.9	14.3
	25	38.9	7.06	42.7	7.88	46.6	8.76	50.5	9.71	54.4	10.7	58.3	11.8	66.1	14.2	69.9	15.5
	27	38.9	7.57	42.7	8.47	46.6	9.42	50.5	10.5	54.4	11.5	58.3	12.7	66.1	15.3	69.9	16.7
	30	38.9	8.40	42.7	9.41	46.6	10.5	50.5	11.7	54.4	12.9	58.3	14.2	66.1	17.1	69.9	18.7
	33	38.9	9.31	42.7	10.5	46.6	11.7	50.5	13.0	54.4	14.4	58.3	15.9	66.1	19.2	69.9	21.2
	35	38.9	9.97	42.7	11.2	46.6	12.5	50.5	13.9	54.4	15.5	58.3	17.1	66.1	21.0	69.9	23.2
	37	38.9	10.7	42.7	12.0	46.6	13.4	50.5	15.0	54.4	16.7	58.3	18.6	66.1	23.0	69.9	25.5
	40	38.9	11.8	42.7	13.4	46.6	15.1	50.5	17.0	54.4	19.1	58.3	21.3	66.1	26.5	69.1	28.6
	43	38.9	13.3	42.7	15.2	46.6	17.2	50.5	19.4	54.4	21.8	58.3	24.4	65.4	29.9	66.7	30.1
47.6 (70%)	10	34.0	5.63	37.4	6.06	40.8	6.49	44.2	6.92	47.6	7.35	51.0	7.78	57.8	8.64	61.2	9.08
	15	34.0	5.63	37.4	6.06	40.8	6.49	44.2	6.92	47.6	7.35	51.0	7.78	57.8	8.64	61.2	9.08
	21	34.0	5.76	37.4	6.20	40.8	6.65	44.2	7.09	47.6	7.75	51.0	8.46	57.8	10.0	61.2	10.8
	23	34.0	6.02	37.4	6.49	40.8	6.96	44.2	7.63	47.6	8.35	51.0	9.12	57.8	10.8	61.2	11.7
	25	34.0	6.29	37.4	6.79	40.8	7.46	44.2	8.21	47.6	8.99	51.0	9.83	57.8	11.7	61.2	12.6
	27	34.0	6.57	37.4	7.25	40.8	8.01	44.2	8.82	47.6	9.67	51.0	10.6	57.8	12.6	61.2	13.6
	30	34.0	7.23	37.4	8.04	40.8	8.90	44.2	9.81	47.6	10.8	51.0	11.8	57.8	14.0	61.2	15.3
	33	34.0	7.99	37.4	8.91	40.8	9.87	44.2	10.9	47.6	12.0	51.0	13.1	57.8	15.7	61.2	17.1
	35	34.0	8.54	37.4	9.53	40.8	10.6	44.2	11.7	47.6	12.9	51.0	14.1	57.8	16.9	61.2	18.5
	37	34.0	9.13	37.4	10.2	40.8	11.3	44.2	12.5	47.6	13.8	51.0	15.2	57.8	18.4	61.2	20.2
	40	34.0	10.1	37.4	11.3	40.8	12.6	44.2	14.0	47.6	15.6	51.0	17.3	57.8	21.0	61.2	23.1
	43	34.0	11.3	37.4	12.7	40.8	14.2	44.2	15.9	47.6	17.7	51.0	19.7	57.8	24.1	61.2	26.6
40.8 (60%)	10	29.1	5.02	32.1	5.39	35.0	5.76	37.9	6.12	40.8	6.49	43.7	6.86	49.5	7.60	52.5	7.97
	15	29.1	5.02	32.1	5.39	35.0	5.76	37.9	6.12	40.8	6.49	43.7	6.86	49.5	7.60	52.5	7.97
	21	29.1	5.13	32.1	5.51	35.0	5.89	37.9	6.27	40.8	6.65	43.7	7.03	49.5	8.15	52.5	8.78
	23	29.1	5.35	32.1	5.75	35.0	6.15	37.9	6.56	40.8	6.96	43.7	7.53	49.5	8.79	52.5	9.47
	25	29.1	5.58	32.1	6.01	35.0	6.43	37.9	6.86	40.8	7.46	43.7	8.10	49.5	9.47	52.5	10.2
	27	29.1	5.82	32.1	6.27	35.0	6.73	37.9	7.36	40.8	8.01	43.7	8.70	49.5	10.2	52.5	11.0
	30	29.1	6.19	32.1	6.79	35.0	7.46	37.9	8.16	40.8	8.90	43.7	9.68	49.5	11.4	52.5	12.3
	33	29.1	6.78	32.1	7.50	35.0	8.25	37.9	9.04	40.8	9.87	43.7	10.8	49.5	12.6	52.5	13.7
	35	29.1	7.23	32.1	8.01	35.0	8.82	37.9	9.68	40.8	10.6	43.7	11.5	49.5	13.6	52.5	14.7
	37	29.1	7.71	32.1	8.55	35.0	9.43	37.9	10.4	40.8	11.3	43.7	12.4	49.5	14.6	52.5	15.8
	40	29.1	8.49	32.1	9.43	35.0	10.4	37.9	11.5	40.8	12.6	43.7	13.8	49.5	16.5	52.5	18.0
	43	29.1	9.38	32.1	10.5	35.0	11.7	37.9	12.9	40.8	14.2	43.7	15.7	49.5	18.8	52.5	20.5
34.0 (50%)	10	24.3	4.40	26.7	4.71	29.1	5.02	31.6	5.33	34.0	5.63	36.4	5.94	41.3	6.55	43.7	6.86
	15	24.3	4.40	26.7	4.71	29.1	5.02	31.6	5.33	34.0	5.63	36.4	5.94	41.3	6.55	43.7	6.86
	21	24.3	4.49	26.7	4.81	29.1	5.13	31.6	5.44	34.0	5.76	36.4	6.08	41.3	6.71	43.7	7.03
	23	24.3	4.68	26.7	5.02	29.1	5.35	31.6	5.69	34.0	6.02	36.4	6.36	41.3	7.04	43.7	7.53
	25	24.3	4.87	26.7	5.23	29.1	5.58	31.6	5.94	34.0	6.29	36.4	6.64	41.3	7.57	43.7	8.10
	27	24.3	5.07	26.7	5.45	29.1	5.82	31.6	6.19	34.0	6.57	36.4	7.04	41.3	8.12	43.7	8.70
	30	24.3	5.38	26.7	5.79	29.1	6.19	31.6	6.68	34.0	7.23	36.4	7.80	41.3	9.03	43.7	9.68
	33	24.3	5.71	26.7	6.21	29.1	6.78	31.6	7.37	34.0	7.99	36.4	8.64	41.3	10.0	43.7	10.8
	35	24.3	6.02	26.7	6.61	29.1	7.23	31.6	7.87	34.0	8.54	36.4	9.24	41.3	10.7	43.7	11.5
	37	24.3	6.41	26.7	7.04	29.1	7.71	31.6	8.40	34.0	9.13	36.4	9.89	41.3	11.5	43.7	12.4
	40	24.3	7.03	26.7	7.74	29.1	8.49	31.6	9.27	34.0	10.1	36.4	10.9	41.3	12.8	43.7	13.8
	43	24.3	7.71	26.7	8.51	29.1	9.38	31.6	10.3	34.0	11.3	36.4	12.3	41.3	14.5	43.7	15.7

TC : Total Capacity kW.

PI : Power Input kW (Compressor + Outdoor fan motor).

The data is based on the following conditions. Pipe length : 7.5 m; Height difference : 0 m.

MODEL SELECTION

■ MODELS : AJ*A90L + AJ*A72U + AJ*A72U

• CAPACITY : 72.8kW (26HP)

Total rated cooling capacity of indoor unit	Outdoor temperature	Indoor temperature															
		20°CDB / 15°CWB		23°CDB / 16°CWB		24°CDB / 17°CWB		26°CDB / 18°CWB		27°CDB / 19°CWB		28°CDB / 20°CWB		30°CDB / 22°CWB		32°CDB / 23°CWB	
	(°CDB)	TC	PI	TC	PI	TC	PI	TC	PI	TC	PI	TC	PI	TC	PI	TC	PI
109 (150%)	10	78.0	11.1	85.8	12.1	93.6	13.0	101	14.7	109	16.9	112	17.3	116	17.7	118	17.8
	15	78.0	11.7	85.8	13.6	93.6	15.7	101	18.1	105	19.2	107	19.4	111	19.7	114	19.9
	21	78.0	14.8	85.8	17.2	93.6	19.9	98.3	21.4	100	21.6	102	21.8	106	22.2	108	22.3
	23	78.0	15.9	85.8	18.6	93.6	21.5	96.6	22.2	98.5	22.4	100	22.6	104	23.0	106	23.2
	25	78.0	17.2	85.8	20.0	92.8	22.9	94.7	23.0	96.7	23.2	98.6	23.4	102	23.8	104	24.0
	27	78.0	18.5	85.8	21.6	91.0	23.7	92.9	23.9	94.8	24.0	96.7	24.2	100	24.7	102	24.9
	30	78.0	20.7	85.8	24.4	88.2	25.0	90.0	25.2	91.8	25.4	93.7	25.7	97.4	26.1	99.3	26.4
	33	78.0	23.5	83.4	26.2	85.2	26.4	86.9	26.7	88.7	26.9	90.6	27.1	94.2	27.6	96.0	27.8
	35	78.0	25.7	81.4	27.2	83.1	27.4	84.9	27.6	86.7	27.8	88.4	28.1	92.1	28.5	93.9	28.8
	37	77.6	27.9	79.3	28.1	81.1	28.3	82.8	28.6	84.6	28.8	86.3	29.0	89.9	29.5	91.7	29.7
	40	74.6	29.3	76.3	29.6	78.0	29.8	79.7	30.0	81.4	30.2	83.1	30.5	86.6	30.9	88.4	31.2
	43	71.5	30.8	73.2	31.0	74.8	31.2	76.5	31.4	78.2	31.7	79.9	31.9	83.3	32.4	85.0	32.6
101 (140%)	10	72.8	10.5	80.1	11.4	87.4	12.3	94.6	13.1	101	14.9	109	16.9	114	17.5	116	17.7
	15	72.8	10.6	80.1	12.2	87.4	14.0	94.6	16.0	101	18.3	105	19.2	109	19.5	111	19.7
	21	72.8	13.3	80.1	15.4	87.4	17.7	94.6	20.3	98.5	21.4	100	21.6	104	22.0	106	22.2
	23	72.8	14.4	80.1	16.6	87.4	19.1	94.6	22.0	96.8	22.2	98.7	22.4	102	22.8	104	23.0
	25	72.8	15.5	80.1	17.9	87.4	20.7	93.1	22.9	95.0	23.1	96.9	23.2	100	23.6	102	23.8
	27	72.8	16.6	80.1	19.3	87.4	22.3	91.3	23.7	93.2	23.9	95.1	24.1	98.8	24.5	100	24.7
	30	72.8	18.6	80.1	21.6	86.7	24.8	88.5	25.0	90.3	25.3	92.1	25.5	95.8	25.9	97.6	26.2
	33	72.8	20.8	80.1	24.6	83.8	26.3	85.5	26.5	87.3	26.7	89.1	26.9	92.6	27.4	94.5	27.6
	35	72.8	22.8	80.1	27.0	81.8	27.2	83.5	27.4	85.3	27.7	87.0	27.9	90.6	28.3	92.3	28.6
	37	72.8	24.9	78.1	28.0	79.8	28.2	81.5	28.4	83.2	28.6	85.0	28.9	88.4	29.3	90.2	29.5
	40	72.8	28.6	75.1	29.4	76.8	29.6	78.4	29.8	80.1	30.1	81.8	30.3	85.2	30.7	87.0	31.0
	43	70.5	30.6	72.1	30.8	73.7	31.1	75.3	31.3	77.0	31.5	78.6	31.7	82.0	32.2	83.7	32.4
94.6 (130%)	10	67.6	9.91	74.4	10.7	81.1	11.5	87.9	12.3	94.6	13.1	101	14.7	111	17.3	113	17.5
	15	67.6	9.91	74.4	10.9	81.1	12.5	87.9	14.1	94.6	16.0	101	18.1	107	19.3	109	19.5
	21	67.6	12.0	74.4	13.8	81.1	15.7	87.9	17.9	94.6	20.3	98.5	21.4	102	21.8	104	22.0
	23	67.6	12.9	74.4	14.8	81.1	17.0	87.9	19.3	94.6	22.0	96.7	22.2	100	22.6	102	22.8
	25	67.6	13.9	74.4	16.0	81.1	18.3	87.9	20.9	93.1	22.9	95.0	23.1	98.7	23.4	100	23.6
	27	67.6	14.9	74.4	17.2	81.1	19.7	87.9	22.5	91.4	23.7	93.2	23.9	96.9	24.3	98.7	24.5
	30	67.6	16.6	74.4	19.2	81.1	22.1	86.9	24.8	88.6	25.0	90.4	25.3	93.9	25.7	95.7	25.9
	33	67.6	18.5	74.4	21.6	81.1	25.2	84.0	26.3	85.7	26.5	87.4	26.7	90.9	27.2	92.7	27.4
	35	67.6	20.1	74.4	23.6	80.4	27.0	82.0	27.2	83.7	27.5	85.4	27.7	88.9	28.1	90.6	28.3
	37	67.6	21.9	74.4	25.8	78.4	28.0	80.1	28.2	81.7	28.4	83.4	28.7	86.8	29.1	88.6	29.3
	40	67.6	25.1	73.8	29.2	75.5	29.4	77.1	29.7	78.7	29.9	80.4	30.1	83.7	30.5	85.4	30.8
	43	67.6	28.8	70.9	30.7	72.5	30.9	74.0	31.1	75.7	31.3	77.3	31.6	80.6	32.0	82.2	32.2
87.4 (120%)	10	62.4	9.29	68.6	10.0	74.9	10.8	81.1	11.5	87.4	12.3	93.6	13.0	106	16.0	110	17.3
	15	62.4	9.29	68.6	10.0	74.9	11.0	81.1	12.5	87.4	14.0	93.6	15.7	104	19.1	106	19.3
	21	62.4	10.7	68.6	12.2	74.9	13.9	81.1	15.7	87.4	17.7	93.6	19.9	99.9	21.6	101	21.7
	23	62.4	11.6	68.6	13.2	74.9	15.0	81.1	17.0	87.4	19.1	93.6	21.5	98.2	22.4	100	22.6
	25	62.4	12.4	68.6	14.2	74.9	16.1	81.1	18.3	87.4	20.7	92.9	22.9	96.5	23.2	98.3	23.4
	27	62.4	13.3	68.6	15.3	74.9	17.4	81.1	19.7	87.4	22.3	91.2	23.7	94.8	24.0	96.6	24.2
	30	62.4	14.8	68.6	17.0	74.9	19.4	81.1	22.1	86.8	24.8	88.5	25.0	91.9	25.5	93.7	25.7
	33	62.4	16.5	68.6	19.0	74.9	21.9	81.1	25.2	83.9	26.3	85.6	26.5	89.0	26.9	90.7	27.1
	35	62.4	17.7	68.6	20.6	74.9	23.9	80.4	27.0	82.0	27.2	83.7	27.5	87.0	27.9	88.7	28.1
	37	62.4	19.3	68.6	22.5	74.9	26.2	78.5	28.0	80.1	28.2	81.7	28.4	85.0	28.9	86.7	29.1
	40	62.4	21.9	68.6	25.7	74.0	29.3	75.6	29.5	77.2	29.7	78.8	29.9	82.0	30.3	83.7	30.5
	43	62.4	25.1	68.6	29.6	71.1	30.7	72.6	30.9	74.2	31.1	75.8	31.4	79.0	31.8	80.6	32.0
80.1 (110%)	10	57.2	8.67	62.9	9.35	68.6	10.0	74.4	10.7	80.1	11.4	85.8	12.1	97.2	13.7	102	15.1
	15	57.2	8.67	62.9	9.35	68.6	10.0	74.4	10.9	80.1	12.2	85.8	13.6	97.2	16.8	102	18.6
	21	57.2	9.60	62.9	10.9	68.6	12.2	74.4	13.8	80.1	15.4	85.8	17.2	97.2	21.3	99.1	21.5
	23	57.2	10.3	62.9	11.7	68.6	13.2	74.4	14.8	80.1	16.6	85.8	18.6	95.7	22.1	97.5	22.3
	25	57.2	11.1	62.9	12.6	68.6	14.2	74.4	16.0	80.1	17.9	85.8	20.0	94.0	23.0	95.8	23.1
	27	57.2	11.9	62.9	13.5	68.6	15.3	74.4	17.2	80.1	19.3	85.8	21.6	92.3	23.8	94.1	24.0
	30	57.2	13.2	62.9	15.0	68.6	17.0	74.4	19.2	80.1	21.6	85.8	24.4	89.7	25.2	91.4	25.4
	33	57.2	14.6	62.9	16.7	68.6	19.0	74.4	21.6	80.1	24.6	83.6	26.2	86.9	26.6	88.5	26.9
	35	57.2	15.7	62.9	18.0	68.6	20.6	74.4	23.6	80.1	27.0	81.7	27.2	85.0	27.6	86.6	27.8
	37	57.2	16.9	62.9	19.5	68.6	22.5	74.4	25.8	78.2	28.0	79.8	28.2	83.0	28.6	84.7	28.8
	40	57.2	19.2	62.9	22.2	68.6	25.7	73.9	29.2	75.4	29.4	77.0	29.7	80.1	30.1	81.7	30.3
	43	57.2	21.8	62.9	25.4	68.6	29.6	71.0	30.7	72.5	30.9	74.1	31.1	77.2	31.5	78.7	31.8

TC : Total Capacity kW.

PI : Power Input kW (Compressor + Outdoor fan motor).

The data is based on the following conditions. Pipe length : 7.5 m; Height difference : 0 m.

MODEL SELECTION

■ MODELS : AJ∗A90L + AJ∗A72U + AJ∗A72U

• CAPACITY : 72.8kW (26HP)

Total rated cooling capacity of indoor unit	Outdoor temperature	Indoor temperature															
		20℃CDB / 15℃CWB		23℃CDB / 16℃CWB		24℃CDB / 17℃CWB		26℃CDB / 18℃CWB		27℃CDB / 19℃CWB		28℃CDB / 20℃CWB		30℃CDB / 22℃CWB		32℃CDB / 23℃CWB	
	(℃DB)	TC	PI	TC	PI	TC	PI	TC	PI	TC	PI	TC	PI	TC	PI	TC	PI
72.8 (100%)	10	52.0	8.05	57.2	8.67	62.4	9.29	67.6	9.91	72.8	10.5	78.0	11.1	88.4	12.4	93.6	13.0
	15	52.0	8.05	57.2	8.67	62.4	9.29	67.6	9.91	72.8	10.6	78.0	11.7	88.4	14.3	93.6	15.7
	21	52.0	8.55	57.2	9.60	62.4	10.7	67.6	12.0	72.8	13.3	78.0	14.8	88.4	18.1	93.6	19.9
	23	52.0	9.17	57.2	10.3	62.4	11.6	67.6	12.9	72.8	14.4	78.0	15.9	88.4	19.5	93.6	21.5
	25	52.0	9.83	57.2	11.1	62.4	12.4	67.6	13.9	72.8	15.5	78.0	17.2	88.4	21.1	92.9	22.9
	27	52.0	10.5	57.2	11.9	62.4	13.3	67.6	14.9	72.8	16.6	78.0	18.5	88.4	22.8	91.3	23.7
	30	52.0	11.7	57.2	13.2	62.4	14.8	67.6	16.6	72.8	18.6	78.0	20.7	87.1	24.9	88.7	25.1
	33	52.0	12.9	57.2	14.6	62.4	16.5	67.6	18.5	72.8	20.8	78.0	23.5	84.4	26.3	86.0	26.5
	35	52.0	13.8	57.2	15.7	62.4	17.7	67.6	20.1	72.8	22.8	78.0	25.7	82.6	27.3	84.2	27.5
	37	52.0	14.8	57.2	16.9	62.4	19.3	67.6	21.9	72.8	24.9	77.7	27.9	80.8	28.3	82.3	28.5
	40	52.0	16.7	57.2	19.2	62.4	21.9	67.6	25.1	72.8	28.6	74.9	29.4	78.0	29.8	79.5	30.0
	43	52.0	18.9	57.2	21.8	62.4	25.1	67.6	28.8	70.7	30.7	72.1	30.9	75.1	31.3	76.6	31.5
65.5 (90%)	10	46.8	7.43	51.5	7.99	56.2	8.54	60.8	9.10	65.5	9.66	70.2	10.2	79.6	11.3	84.2	11.9
	15	46.8	7.43	51.5	7.99	56.2	8.54	60.8	9.10	65.5	9.66	70.2	10.2	79.6	12.1	84.2	13.2
	21	46.8	7.59	51.5	8.45	56.2	9.38	60.8	10.4	65.5	11.5	70.2	12.6	79.6	15.2	84.2	16.7
	23	46.8	8.12	51.5	9.06	56.2	10.1	60.8	11.2	65.5	12.4	70.2	13.6	79.6	16.4	84.2	18.0
	25	46.8	8.69	51.5	9.72	56.2	10.8	60.8	12.0	65.5	13.3	70.2	14.7	79.6	17.7	84.2	19.4
	27	46.8	9.30	51.5	10.4	56.2	11.6	60.8	12.9	65.5	14.3	70.2	15.8	79.6	19.1	84.2	21.0
	30	46.8	10.3	51.5	11.5	56.2	12.9	60.8	14.3	65.5	15.9	70.2	17.6	79.6	21.4	84.2	23.6
	33	46.8	11.4	51.5	12.8	56.2	14.3	60.8	15.9	65.5	17.7	70.2	19.6	79.6	24.3	83.2	26.2
	35	46.8	12.1	51.5	13.7	56.2	15.3	60.8	17.1	65.5	19.1	70.2	21.4	79.6	26.7	81.4	27.2
	37	46.8	13.0	51.5	14.6	56.2	16.5	60.8	18.6	65.5	20.8	70.2	23.4	78.2	28.0	79.7	28.2
	40	46.8	14.5	51.5	16.5	56.2	18.7	60.8	21.1	65.5	23.8	70.2	26.8	75.5	29.5	77.0	29.7
	43	46.8	16.3	51.5	18.6	56.2	21.2	60.8	24.0	65.5	27.2	69.9	30.6	72.8	30.9	74.2	31.1
58.2 (80%)	10	41.6	6.81	45.8	7.31	49.9	7.80	54.1	8.30	58.2	8.79	62.4	9.29	70.7	10.3	74.9	10.8
	15	41.6	6.81	45.8	7.31	49.9	7.80	54.1	8.30	58.2	8.79	62.4	9.29	70.7	10.3	74.9	11.0
	21	41.6	6.96	45.8	7.47	49.9	8.15	54.1	8.96	58.2	9.82	62.4	10.7	70.7	12.8	74.9	13.9
	23	41.6	7.26	45.8	7.92	49.9	8.74	54.1	9.62	58.2	10.6	62.4	11.6	70.7	13.8	74.9	15.0
	25	41.6	7.64	45.8	8.47	49.9	9.37	54.1	10.3	58.2	11.3	62.4	12.4	70.7	14.8	74.9	16.1
	27	41.6	8.16	45.8	9.06	49.9	10.0	54.1	11.1	58.2	12.2	62.4	13.3	70.7	15.9	74.9	17.4
	30	41.6	8.99	45.8	10.0	49.9	11.1	54.1	12.3	58.2	13.5	62.4	14.8	70.7	17.8	74.9	19.4
	33	41.6	9.91	45.8	11.1	49.9	12.3	54.1	13.6	58.2	15.0	62.4	16.5	70.7	19.9	74.9	21.9
	35	41.6	10.6	45.8	11.8	49.9	13.1	54.1	14.6	58.2	16.1	62.4	17.7	70.7	21.7	74.9	23.9
	37	41.6	11.3	45.8	12.6	49.9	14.1	54.1	15.6	58.2	17.4	62.4	19.3	70.7	23.7	74.9	26.2
	40	41.6	12.4	45.8	14.0	49.9	15.8	54.1	17.7	58.2	19.7	62.4	21.9	70.7	27.1	74.1	29.3
	43	41.6	14.0	45.8	15.8	49.9	17.8	54.1	20.0	58.2	22.4	62.4	25.1	70.1	30.6	71.5	30.8
51.0 (70%)	10	36.4	6.19	40.0	6.63	43.7	7.06	47.3	7.49	51.0	7.92	54.6	8.36	61.9	9.22	65.5	9.66
	15	36.4	6.19	40.0	6.63	43.7	7.06	47.3	7.49	51.0	7.92	54.6	8.36	61.9	9.22	65.5	9.66
	21	36.4	6.32	40.0	6.77	43.7	7.21	47.3	7.67	51.0	8.35	54.6	9.06	61.9	10.6	65.5	11.5
	23	36.4	6.58	40.0	7.05	43.7	7.53	47.3	8.22	51.0	8.95	54.6	9.73	61.9	11.4	65.5	12.4
	25	36.4	6.85	40.0	7.35	43.7	8.05	47.3	8.80	51.0	9.60	54.6	10.4	61.9	12.3	65.5	13.3
	27	36.4	7.13	40.0	7.83	43.7	8.60	47.3	9.42	51.0	10.3	54.6	11.2	61.9	13.2	65.5	14.3
	30	36.4	7.81	40.0	8.63	43.7	9.50	47.3	10.4	51.0	11.4	54.6	12.4	61.9	14.7	65.5	15.9
	33	36.4	8.58	40.0	9.50	43.7	10.5	47.3	11.5	51.0	12.6	54.6	13.8	61.9	16.3	65.5	17.7
	35	36.4	9.13	40.0	10.1	43.7	11.2	47.3	12.3	51.0	13.5	54.6	14.8	61.9	17.5	65.5	19.1
	37	36.4	9.72	40.0	10.8	43.7	11.9	47.3	13.2	51.0	14.4	54.6	15.8	61.9	19.0	65.5	20.8
	40	36.4	10.7	40.0	11.9	43.7	13.2	47.3	14.7	51.0	16.2	54.6	17.9	61.9	21.7	65.5	23.8
	43	36.4	11.9	40.0	13.3	43.7	14.9	47.3	16.5	51.0	18.3	54.6	20.3	61.9	24.7	65.5	27.2
43.7 (60%)	10	31.2	5.57	34.3	5.94	37.4	6.32	40.6	6.69	43.7	7.06	46.8	7.43	53.0	8.17	56.2	8.54
	15	31.2	5.57	34.3	5.94	37.4	6.32	40.6	6.69	43.7	7.06	46.8	7.43	53.0	8.17	56.2	8.54
	21	31.2	5.68	34.3	6.07	37.4	6.45	40.6	6.83	43.7	7.21	46.8	7.59	53.0	8.75	56.2	9.38
	23	31.2	5.91	34.3	6.31	37.4	6.72	40.6	7.12	43.7	7.53	46.8	8.12	53.0	9.39	56.2	10.1
	25	31.2	6.14	34.3	6.57	37.4	7.00	40.6	7.44	43.7	8.05	46.8	8.69	53.0	10.1	56.2	10.8
	27	31.2	6.38	34.3	6.83	37.4	7.31	40.6	7.94	43.7	8.60	46.8	9.30	53.0	10.8	56.2	11.6
	30	31.2	6.76	34.3	7.36	37.4	8.04	40.6	8.75	43.7	9.50	46.8	10.3	53.0	12.0	56.2	12.9
	33	31.2	7.35	34.3	8.08	37.4	8.84	40.6	9.63	43.7	10.5	46.8	11.4	53.0	13.3	56.2	14.3
	35	31.2	7.81	34.3	8.59	37.4	9.41	40.6	10.3	43.7	11.2	46.8	12.1	53.0	14.2	56.2	15.3
	37	31.2	8.29	34.3	9.13	37.4	10.0	40.6	11.0	43.7	11.9	46.8	13.0	53.0	15.2	56.2	16.5
	40	31.2	9.07	34.3	10.0	37.4	11.0	40.6	12.1	43.7	13.2	46.8	14.5	53.0	17.2	56.2	18.7
	43	31.2	9.96	34.3	11.1	37.4	12.3	40.6	13.5	43.7	14.9	46.8	16.3	53.0	19.4	56.2	21.2
36.4 (50%)	10	26.0	4.95	28.6	5.26	31.2	5.57	33.8	5.88	36.4	6.19	39.0	6.50	44.2	7.12	46.8	7.43
	15	26.0	4.95	28.6	5.26	31.2	5.57	33.8	5.88	36.4	6.19	39.0	6.50	44.2	7.12	46.8	7.43
	21	26.0	5.05	28.6	5.36	31.2	5.68	33.8	6.00	36.4	6.32	39.0	6.64	44.2	7.28	46.8	7.59
	23	26.0	5.23	28.6	5.57	31.2	5.91	33.8	6.24	36.4	6.58	39.0	6.92	44.2	7.62	46.8	8.12
	25	26.0	5.43	28.6	5.78	31.2	6.14	33.8	6.50	36.4	6.85	39.0	7.21	44.2	8.15	46.8	8.69
	27	26.0	5.63	28.6	6.00	31.2	6.38	33.8	6.76	36.4	7.13	39.0	7.62	44.2	8.72	46.8	9.30
	30	26.0	5.94	28.6	6.35	31.2	6.76	33.8	7.26	36.4	7.81	39.0	8.39	44.2	9.62	46.8	10.3
	33	26.0	6.27	28.6	6.78	31.2	7.35	33.8	7.95	36.4	8.58	39.0	9.23	44.2	10.6	46.8	11.4
	35	26.0	6.59	28.6	7.19	31.2	7.81	33.8	8.46	36.4	9.13	39.0	9.84	44.2	11.3	46.8	12.1
	37	26.0	6.97	28.6	7.62	31.2	8.29	33.8	8.99	36.4	9.72	39.0	10.5	44.2	12.1	46.8	13.0
	40	26.0	7.60	28.6	8.32	31.2	9.07	33.8	9.86	36.4	10.7	39.0	11.5	44.2	13.4	46.8	14.5
	43	26.0	8.28	28.6	9.09	31.2	9.96	33.8	10.9	36.4	11.9	39.0	12.9	44.2	15.1	46.8	16.3

TC : Total Capacity kW.

PI : Power Input kW (Compressor + Outdoor fan motor).

The data is based on the following conditions. Pipe length : 7.5 m; Height difference : 0 m.

MODEL SELECTION

■ MODELS : AJ*126L + AJ*126U

• CAPACITY : 80.0kW (28HP)

Total rated cooling capacity of indoor unit	Outdoor temperature	Indoor temperature															
		20℃CDB / 15℃CWB		23℃CDB / 16℃CWB		24℃CDB / 17℃CWB		26℃CDB / 18℃CWB		27℃CDB / 19℃CWB		28℃CDB / 20℃CWB		30℃CDB / 22℃CWB		32℃CDB / 23℃CWB	
	(℃DB)	TC	PI	TC	PI	TC	PI	TC	PI	TC	PI	TC	PI	TC	PI	TC	PI
120 (150%)	10	85.7	12.6	94.3	13.8	102	14.9	111	16.8	120	19.4	123	20.0	128	20.4	130	20.6
	15	85.7	13.2	94.3	15.5	102	18.0	111	20.9	116	22.3	118	22.5	123	22.9	125	23.1
	21	85.7	16.9	94.3	19.8	102	23.1	108	25.0	110	25.2	112	25.4	117	25.9	119	26.1
	23	85.7	18.3	94.3	21.5	102	25.1	106	26.0	108	26.2	110	26.4	114	26.9	117	27.1
	25	85.7	19.8	94.3	23.3	102	26.7	104	27.0	106	27.2	108	27.4	112	27.9	114	28.1
	27	85.7	21.5	94.3	25.2	100	27.7	102	28.0	104	28.2	106	28.4	110	29.0	112	29.2
	30	85.7	24.1	94.3	28.6	96.9	29.3	98.9	29.6	100	29.9	102	30.2	107	30.7	109	31.0
	33	85.7	27.5	91.6	30.8	93.6	31.1	95.5	31.4	97.5	31.6	99.5	31.9	103	32.5	105	32.7
	35	85.7	30.3	89.4	32.0	91.3	32.3	93.3	32.5	95.2	32.8	97.2	33.1	101	33.6	103	33.9
	37	85.2	32.9	87.1	33.2	89.0	33.4	91.0	33.7	92.9	34.0	94.8	34.3	98.7	34.8	100	35.1
	40	81.9	34.7	83.7	34.9	85.6	35.2	87.5	35.5	89.3	35.7	91.3	36.0	95.1	36.6	97.0	36.9
	43	78.4	36.4	80.3	36.7	82.1	37.0	83.9	37.2	85.8	37.5	87.6	37.8	91.4	38.3	93.3	38.6
112 (140%)	10	80.0	11.9	88.0	12.9	96.0	14.0	104	15.0	112	16.9	120	19.4	125	20.2	128	20.4
	15	80.0	11.9	88.0	13.8	96.0	16.0	104	18.4	112	21.1	116	22.3	120	22.7	123	22.9
	21	80.0	15.2	88.0	17.7	96.0	20.5	104	23.6	108	25.0	110	25.2	114	25.7	117	25.9
	23	80.0	16.4	88.0	19.1	96.0	22.2	104	25.6	106	26.0	108	26.2	112	26.7	115	26.9
	25	80.0	17.8	88.0	20.7	96.0	24.0	102	26.8	104	27.0	106	27.2	110	27.7	112	27.9
	27	80.0	19.2	88.0	22.4	96.0	26.0	100	27.8	102	28.0	104	28.2	108	28.7	110	29.0
	30	80.0	21.6	88.0	25.2	95.3	29.1	97.3	29.4	99.3	29.7	101	29.9	105	30.5	107	30.7
	33	80.0	24.3	88.0	28.9	92.1	30.9	94.0	31.2	95.9	31.4	97.9	31.7	101	32.2	103	32.5
	35	80.0	26.7	88.0	31.8	89.9	32.1	91.8	32.3	93.7	32.6	95.6	32.9	99.5	33.4	101	33.7
	37	80.0	29.3	85.8	33.0	87.6	33.2	89.5	33.5	91.4	33.8	93.3	34.1	97.2	34.6	99.1	34.9
	40	80.0	33.8	82.4	34.7	84.3	35.0	86.1	35.3	88.0	35.5	89.8	35.8	93.6	36.4	95.5	36.6
	43	77.3	36.3	79.1	36.5	80.8	36.8	82.6	37.0	84.5	37.3	86.3	37.6	90.0	38.1	91.9	38.4
104 (130%)	10	74.3	11.1	81.7	12.1	89.1	13.1	96.6	14.1	104	15.0	111	16.8	122	20.0	125	20.1
	15	74.3	11.1	81.7	12.3	89.1	14.1	96.6	16.1	104	18.4	111	20.9	118	22.4	120	22.6
	21	74.3	13.6	81.7	15.7	89.1	18.1	96.6	20.7	104	23.6	108	25.0	112	25.4	114	25.6
	23	74.3	14.7	81.7	17.0	89.1	19.6	96.6	22.4	104	25.6	106	26.0	110	26.4	112	26.6
	25	74.3	15.9	81.7	18.4	89.1	21.2	96.6	24.3	102	26.8	104	27.0	108	27.4	110	27.7
	27	74.3	17.1	81.7	19.9	89.1	22.9	96.6	26.3	100	27.8	102	28.0	106	28.4	108	28.7
	30	74.3	19.2	81.7	22.3	89.1	25.8	95.5	29.2	97.4	29.4	99.4	29.7	103	30.2	105	30.5
	33	74.3	21.5	81.7	25.2	89.1	29.6	92.3	30.9	94.2	31.2	96.1	31.4	99.9	32.0	101	32.2
	35	74.3	23.5	81.7	27.7	88.3	31.8	90.1	32.1	92.0	32.4	93.9	32.6	97.7	33.2	99.6	33.4
	37	74.3	25.7	81.7	30.4	86.1	33.0	87.9	33.3	89.8	33.6	91.6	33.8	95.4	34.3	97.3	34.6
	40	74.3	29.5	81.0	34.5	82.8	34.8	84.6	35.1	86.4	35.3	88.2	35.6	91.9	36.1	93.8	36.4
	43	74.3	34.1	77.7	36.3	79.5	36.6	81.2	36.8	83.0	37.1	84.8	37.4	88.4	37.9	90.2	38.2
96.0 (120%)	10	68.6	10.4	75.4	11.3	82.3	12.2	89.1	13.1	96.0	14.0	102	14.9	116	18.3	122	19.9
	15	68.6	10.4	75.4	11.3	82.3	12.4	89.1	14.1	96.0	16.0	102	18.0	115	22.2	117	22.4
	21	68.6	12.1	75.4	13.9	82.3	15.9	89.1	18.1	96.0	20.5	102	23.1	109	25.2	112	25.4
	23	68.6	13.1	75.4	15.0	82.3	17.2	89.1	19.6	96.0	22.2	102	25.1	108	26.2	110	26.4
	25	68.6	14.1	75.4	16.2	82.3	18.6	89.1	21.2	96.0	24.0	102	26.7	106	27.2	108	27.4
	27	68.6	15.2	75.4	17.5	82.3	20.1	89.1	22.9	96.0	26.0	100	27.7	104	28.2	106	28.4
	30	68.6	17.1	75.4	19.7	82.3	22.6	89.1	25.8	95.4	29.1	97.3	29.4	101	29.9	102	30.2
	33	68.6	19.1	75.4	22.1	82.3	25.6	89.1	29.6	92.2	30.9	94.1	31.2	97.8	31.7	99.7	31.9
	35	68.6	20.6	75.4	24.1	82.3	28.1	88.3	31.9	90.1	32.1	91.9	32.4	95.6	32.9	97.5	33.1
	37	68.6	22.5	75.4	26.4	82.3	30.8	86.2	33.0	88.0	33.3	89.8	33.6	93.4	34.1	95.3	34.3
	40	68.6	25.7	75.4	30.3	81.2	34.6	82.9	34.8	84.7	35.1	86.5	35.3	90.1	35.9	91.9	36.1
	43	68.6	29.6	75.4	35.1	78.0	36.3	79.7	36.6	81.4	36.9	83.1	37.1	86.6	37.6	88.4	37.9
88.0 (110%)	10	62.9	9.6	69.1	10.5	75.4	11.3	81.7	12.1	88.0	12.9	94.3	13.8	106	15.5	113	17.3
	15	62.9	9.6	69.1	10.5	75.4	11.3	81.7	12.3	88.0	13.8	94.3	15.5	106	19.3	113	21.5
	21	62.9	10.7	69.1	12.2	75.4	13.9	81.7	15.7	88.0	17.7	94.3	19.8	106	24.8	109	25.1
	23	62.9	11.6	69.1	13.2	75.4	15.0	81.7	17.0	88.0	19.1	94.3	21.5	105	25.9	107	26.1
	25	62.9	12.5	69.1	14.3	75.4	16.2	81.7	18.4	88.0	20.7	94.3	23.3	103	26.9	105	27.1
	27	62.9	13.5	69.1	15.4	75.4	17.5	81.7	19.9	88.0	22.4	94.3	25.2	101	27.9	103	28.1
	30	62.9	15.1	69.1	17.3	75.4	19.7	81.7	22.3	88.0	25.2	94.3	28.6	98.6	29.6	100	29.8
	33	62.9	16.8	69.1	19.3	75.4	22.1	81.7	25.2	88.0	28.9	91.8	30.9	95.4	31.4	97.3	31.6
	35	62.9	18.1	69.1	20.8	75.4	24.1	81.7	27.7	88.0	31.8	89.8	32.1	93.3	32.6	95.1	32.8
	37	62.9	19.6	69.1	22.8	75.4	26.4	81.7	30.4	85.9	33.0	87.7	33.3	91.2	33.8	93.0	34.0
	40	62.9	22.3	69.1	26.1	75.4	30.3	81.1	34.5	82.8	34.8	84.5	35.0	88.0	35.5	89.7	35.8
	43	62.9	25.6	69.1	30.0	75.4	35.1	77.9	36.3	79.6	36.6	81.3	36.8	84.7	37.3	86.4	37.6

TC : Total Capacity kW.

PI : Power Input kW (Compressor + Outdoor fan motor).

The data is based on the following conditions. Pipe length : 7.5 m; Height difference : 0 m.

MODEL SELECTION

■ MODELS : AJ*126L + AJ*126U

• CAPACITY : 80.0kW (28HP)

Total rated cooling capacity of indoor unit	Outdoor temperature	Indoor temperature															
		20℃CDB / 15℃CWB		23℃CDB / 16℃CWB		24℃CDB / 17℃CWB		26℃CDB / 18℃CWB		27℃CDB / 19℃CWB		28℃CDB / 20℃CWB		30℃CDB / 22℃CWB		32℃CDB / 23℃CWB	
	(℃DB)	TC	PI	TC	PI	TC	PI	TC	PI	TC	PI	TC	PI	TC	PI	TC	PI
80.0 (100%)	10	57.1	8.90	62.9	9.64	68.6	10.4	74.3	11.1	80.0	11.9	85.7	12.6	97.1	14.1	102	14.9
	15	57.1	8.90	62.9	9.64	68.6	10.4	74.3	11.1	80.0	11.9	85.7	13.2	97.1	16.3	102	18.0
	21	57.1	9.46	62.9	10.7	68.6	12.1	74.3	13.6	80.0	15.2	85.7	16.9	97.1	20.9	102	23.1
	23	57.1	10.2	62.9	11.6	68.6	13.1	74.3	14.7	80.0	16.4	85.7	18.3	97.1	22.6	102	25.1
	25	57.1	11.0	62.9	12.5	68.6	14.1	74.3	15.9	80.0	17.8	85.7	19.8	97.1	24.5	102	26.8
	27	57.1	11.9	62.9	13.5	68.6	15.2	74.3	17.1	80.0	19.2	85.7	21.5	97.1	26.6	100	27.8
	30	57.1	13.2	62.9	15.1	68.6	17.1	74.3	19.2	80.0	21.6	85.7	24.1	95.8	29.2	97.5	29.4
	33	57.1	14.8	62.9	16.8	68.6	19.1	74.3	21.5	80.0	24.3	85.7	27.5	92.8	31.0	94.5	31.2
	35	57.1	15.9	62.9	18.1	68.6	20.6	74.3	23.5	80.0	26.7	85.7	30.3	90.7	32.2	92.5	32.4
	37	57.1	17.1	62.9	19.6	68.6	22.5	74.3	25.7	80.0	29.3	85.3	32.9	88.7	33.4	90.4	33.6
	40	57.1	19.3	62.9	22.3	68.6	25.7	74.3	29.5	80.0	33.8	82.2	34.7	85.6	35.2	87.3	35.5
	43	57.1	22.0	62.9	25.6	68.6	29.6	74.3	34.1	77.5	36.3	79.1	36.5	82.4	37.0	84.1	37.3
72.0 (90%)	10	51.4	8.15	56.6	8.82	61.7	9.50	66.9	10.2	72.0	10.8	77.1	11.5	87.4	12.9	92.6	13.5
	15	51.4	8.15	56.6	8.82	61.7	9.50	66.9	10.2	72.0	10.8	77.1	11.5	87.4	13.7	92.6	15.0
	21	51.4	8.35	56.6	9.33	61.7	10.5	66.9	11.7	72.0	13.0	77.1	14.4	87.4	17.5	92.6	19.2
	23	51.4	8.95	56.6	10.1	61.7	11.3	66.9	12.6	72.0	14.0	77.1	15.6	87.4	18.9	92.6	20.8
	25	51.4	9.64	56.6	10.9	61.7	12.2	66.9	13.6	72.0	15.2	77.1	16.8	87.4	20.5	92.6	22.6
	27	51.4	10.4	56.6	11.7	61.7	13.2	66.9	14.7	72.0	16.4	77.1	18.2	87.4	22.2	92.6	24.4
	30	51.4	11.6	56.6	13.1	61.7	14.7	66.9	16.4	72.0	18.3	77.1	20.4	87.4	25.0	92.6	27.6
	33	51.4	12.9	56.6	14.6	61.7	16.4	66.9	18.4	72.0	20.5	77.1	22.9	87.4	28.6	91.4	30.8
	35	51.4	13.8	56.6	15.7	61.7	17.7	66.9	19.8	72.0	22.3	77.1	25.0	87.4	31.4	89.5	32.0
	37	51.4	14.8	56.6	16.8	61.7	19.1	66.9	21.6	72.0	24.4	77.1	27.4	85.9	33.0	87.5	33.2
	40	51.4	16.6	56.6	19.1	61.7	21.7	66.9	24.7	72.0	27.9	77.1	31.6	82.9	34.8	84.5	35.0
	43	51.4	18.9	56.6	21.7	61.7	24.8	66.9	28.3	72.0	32.2	76.7	36.2	79.9	36.6	81.5	36.9
64.0 (80%)	10	45.7	7.40	50.3	8.00	54.9	8.60	59.4	9.20	64.0	9.79	68.6	10.4	77.7	11.6	82.3	12.2
	15	45.7	7.40	50.3	8.00	54.9	8.60	59.4	9.20	64.0	9.79	68.6	10.4	77.7	11.6	82.3	12.4
	21	45.7	7.58	50.3	8.19	54.9	8.98	59.4	9.95	64.0	11.0	68.6	12.1	77.7	14.5	82.3	15.9
	23	45.7	7.94	50.3	8.71	54.9	9.69	59.4	10.8	64.0	11.9	68.6	13.1	77.7	15.7	82.3	17.2
	25	45.7	8.38	50.3	9.38	54.9	10.5	59.4	11.6	64.0	12.8	68.6	14.1	77.7	17.0	82.3	18.6
	27	45.7	9.00	50.3	10.1	54.9	11.3	59.4	12.5	64.0	13.8	68.6	15.2	77.7	18.4	82.3	20.1
	30	45.7	10.0	50.3	11.2	54.9	12.6	59.4	14.0	64.0	15.5	68.6	17.1	77.7	20.6	82.3	22.6
	33	45.7	11.1	50.3	12.5	54.9	14.0	59.4	15.6	64.0	17.3	68.6	19.1	77.7	23.1	82.3	25.6
	35	45.7	11.9	50.3	13.4	54.9	15.0	59.4	16.8	64.0	18.6	68.6	20.6	77.7	25.3	82.3	28.1
	37	45.7	12.8	50.3	14.4	54.9	16.2	59.4	18.0	64.0	20.2	68.6	22.5	77.7	27.8	82.3	30.8
	40	45.7	14.2	50.3	16.1	54.9	18.2	59.4	20.5	64.0	23.0	68.6	25.7	77.7	32.0	81.3	34.6
	43	45.7	16.0	50.3	18.3	54.9	20.7	59.4	23.4	64.0	26.3	68.6	29.6	76.9	36.2	78.4	36.4
56.0 (70%)	10	40.0	6.65	44.0	7.18	48.0	7.70	52.0	8.22	56.0	8.75	60.0	9.27	68.0	10.3	72.0	10.8
	15	40.0	6.65	44.0	7.18	48.0	7.70	52.0	8.22	56.0	8.75	60.0	9.27	68.0	10.3	72.0	10.8
	21	40.0	6.81	44.0	7.35	48.0	7.89	52.0	8.43	56.0	9.21	60.0	10.1	68.0	12.0	72.0	13.0
	23	40.0	7.13	44.0	7.70	48.0	8.27	52.0	9.07	56.0	9.95	60.0	10.9	68.0	12.9	72.0	14.0
	25	40.0	7.45	44.0	8.06	48.0	8.87	52.0	9.77	56.0	10.7	60.0	11.7	68.0	14.0	72.0	15.2
	27	40.0	7.79	44.0	8.61	48.0	9.54	52.0	10.5	56.0	11.6	60.0	12.7	68.0	15.1	72.0	16.4
	30	40.0	8.59	44.0	9.58	48.0	10.6	52.0	11.7	56.0	12.9	60.0	14.1	68.0	16.9	72.0	18.3
	33	40.0	9.52	44.0	10.6	48.0	11.8	52.0	13.1	56.0	14.4	60.0	15.8	68.0	18.9	72.0	20.5
	35	40.0	10.2	44.0	11.4	48.0	12.7	52.0	14.0	56.0	15.5	60.0	17.0	68.0	20.3	72.0	22.3
	37	40.0	10.9	44.0	12.2	48.0	13.6	52.0	15.1	56.0	16.6	60.0	18.3	68.0	22.2	72.0	24.4
	40	40.0	12.1	44.0	13.5	48.0	15.1	52.0	16.9	56.0	18.8	60.0	20.8	68.0	25.4	72.0	27.9
	43	40.0	13.5	44.0	15.2	48.0	17.1	52.0	19.2	56.0	21.4	60.0	23.7	68.0	29.1	72.0	32.2
48.0 (60%)	10	34.3	5.91	37.7	6.35	41.1	6.80	44.6	7.25	48.0	7.70	51.4	8.15	58.3	9.05	61.7	9.50
	15	34.3	5.91	37.7	6.35	41.1	6.80	44.6	7.25	48.0	7.70	51.4	8.15	58.3	9.05	61.7	9.50
	21	34.3	6.04	37.7	6.50	41.1	6.96	44.6	7.42	48.0	7.89	51.4	8.35	58.3	9.70	61.7	10.5
	23	34.3	6.31	37.7	6.80	41.1	7.29	44.6	7.78	48.0	8.27	51.4	8.95	58.3	10.5	61.7	11.3
	25	34.3	6.59	37.7	7.11	41.1	7.63	44.6	8.14	48.0	8.87	51.4	9.64	58.3	11.3	61.7	12.2
	27	34.3	6.88	37.7	7.43	41.1	7.98	44.6	8.74	48.0	9.54	51.4	10.4	58.3	12.2	61.7	13.2
	30	34.3	7.34	37.7	8.05	41.1	8.87	44.6	9.72	48.0	10.6	51.4	11.6	58.3	13.6	61.7	14.7
	33	34.3	8.04	37.7	8.92	41.1	9.83	44.6	10.8	48.0	11.8	51.4	12.9	58.3	15.2	61.7	16.4
	35	34.3	8.59	37.7	9.53	41.1	10.5	44.6	11.6	48.0	12.7	51.4	13.8	58.3	16.3	61.7	17.7
	37	34.3	9.18	37.7	10.2	41.1	11.3	44.6	12.4	48.0	13.6	51.4	14.8	58.3	17.5	61.7	19.1
	40	34.3	10.1	37.7	11.3	41.1	12.5	44.6	13.8	48.0	15.1	51.4	16.6	58.3	19.9	61.7	21.7
	43	34.3	11.2	37.7	12.6	41.1	14.0	44.6	15.5	48.0	17.1	51.4	18.9	58.3	22.7	61.7	24.8
40.0 (50%)	10	28.6	5.16	31.4	5.53	34.3	5.91	37.1	6.28	40.0	6.65	42.9	7.03	48.6	7.78	51.4	8.15
	15	28.6	5.16	31.4	5.53	34.3	5.91	37.1	6.28	40.0	6.65	42.9	7.03	48.6	7.78	51.4	8.15
	21	28.6	5.27	31.4	5.65	34.3	6.04	37.1	6.42	40.0	6.81	42.9	7.19	48.6	7.96	51.4	8.35
	23	28.6	5.50	31.4	5.90	34.3	6.31	37.1	6.72	40.0	7.13	42.9	7.53	48.6	8.35	51.4	8.95
	25	28.6	5.73	31.4	6.16	34.3	6.59	37.1	7.02	40.0	7.45	42.9	7.88	48.6	8.99	51.4	9.64
	27	28.6	5.97	31.4	6.43	34.3	6.88	37.1	7.34	40.0	7.79	42.9	8.36	48.6	9.67	51.4	10.4
	30	28.6	6.35	31.4	6.84	34.3	7.34	37.1	7.92	40.0	8.59	42.9	9.29	48.6	10.8	51.4	11.6
	33	28.6	6.75	31.4	7.35	34.3	8.04	37.1	8.77	40.0	9.52	42.9	10.3	48.6	12.0	51.4	12.9
	35	28.6	7.13	31.4	7.84	34.3	8.59	37.1	9.37	40.0	10.2	42.9	11.0	48.6	12.9	51.4	13.8
	37	28.6	7.59	31.4	8.37	34.3	9.18	37.1	10.0	40.0	10.9	42.9	11.8	48.6	13.8	51.4	14.8
	40	28.6	8.35	31.4	9.22	34.3	10.1	37.1	11.1	40.0	12.1	42.9	13.1	48.6	15.4	51.4	16.6
	43	28.6	9.18	31.4	10.2	34.3	11.2	37.1	12.3	40.0	13.5	42.9	14.7	48.6	17.4	51.4	18.9

TC : Total Capacity kW.

PI : Power Input kW (Compressor + Outdoor fan motor).

The data is based on the following conditions. Pipe length : 7.5 m; Height difference : 0 m.

MODEL SELECTION

■ MODELS : AJ*A90L + AJ* A90U + AJ*A90U

• CAPACITY : 84.0kW (30HP)

Total rated cooling capacity of indoor unit	Outdoor temperature	Indoor temperature															
		20℃CDB / 15℃CWB		23℃CDB / 16℃CWB		24℃CDB / 17℃CWB		26℃CDB / 18℃CWB		27℃CDB / 19℃CWB		28℃CDB / 20℃CWB		30℃CDB / 22℃CWB		32℃CDB / 23℃CWB	
	(℃DB)	TC	PI	TC	PI	TC	PI	TC	PI	TC	PI	TC	PI	TC	PI	TC	PI
126 (150%)	10	90.0	12.7	99.0	13.8	108	14.9	117	16.9	126	19.4	129	19.9	134	20.3	136	20.5
	15	90.0	13.4	99.0	15.6	108	18.0	117	20.8	121	22.1	124	22.3	129	22.7	131	22.9
	21	90.0	16.9	99.0	19.8	108	22.9	113	24.7	115	24.9	118	25.1	122	25.5	125	25.8
	23	90.0	18.3	99.0	21.3	108	24.8	111	25.6	113	25.8	115	26.1	120	26.5	122	26.7
	25	90.0	19.7	99.0	23.1	107	26.4	109	26.6	111	26.8	113	27.0	118	27.5	120	27.7
	27	90.0	21.3	99.0	24.9	105	27.3	107	27.5	109	27.8	111	28.0	116	28.5	118	28.8
	30	90.0	23.9	99.0	28.2	101	28.9	103	29.1	105	29.4	108	29.7	112	30.2	114	30.5
	33	90.0	27.1	96.2	30.3	98.3	30.5	100	30.8	102	31.1	104	31.3	108	31.9	110	32.1
	35	90.0	29.7	93.9	31.4	95.9	31.7	97.9	31.9	100	32.2	102	32.5	106	33.0	108	33.3
	37	89.6	32.3	91.5	32.5	93.5	32.8	95.5	33.0	97.6	33.3	99.6	33.6	103	34.1	105	34.4
	40	86.1	33.9	88.0	34.2	89.9	34.5	91.9	34.7	93.9	35.0	95.9	35.3	99.9	35.8	101	36.1
	43	82.5	35.6	84.4	35.9	86.3	36.1	88.2	36.4	90.2	36.7	92.1	36.9	96.1	37.5	98.1	37.8
117 (140%)	10	84.0	12.0	92.4	13.0	100	14.0	109	15.0	117	17.0	126	19.4	131	20.1	134	20.3
	15	84.0	12.0	92.4	13.9	100	16.0	109	18.4	117	21.0	122	22.1	126	22.5	129	22.7
	21	84.0	15.2	92.4	17.7	100	20.4	109	23.4	113	24.7	115	24.9	120	25.3	122	25.5
	23	84.0	16.4	92.4	19.1	100	22.0	109	25.3	111	25.7	113	25.9	118	26.3	120	26.5
	25	84.0	17.7	92.4	20.6	100	23.8	107	26.4	109	26.6	111	26.8	116	27.3	118	27.5
	27	84.0	19.1	92.4	22.2	100	25.7	105	27.3	107	27.6	109	27.8	114	28.3	116	28.5
	30	84.0	21.4	92.4	24.9	100	28.7	102	28.9	104	29.2	106	29.4	110	30.0	112	30.2
	33	84.0	24.0	92.4	28.4	96.7	30.3	98.7	30.6	100	30.9	102	31.1	106	31.6	108	31.9
	35	84.0	26.3	92.4	31.2	94.4	31.5	96.4	31.7	98.4	32.0	100	32.2	104	32.8	106	33.0
	37	84.0	28.7	90.1	32.3	92.1	32.6	94.0	32.9	96.0	33.1	98.0	33.4	102	33.9	104	34.2
	40	84.0	33.1	86.7	34.0	88.6	34.3	90.5	34.5	92.4	34.8	94.4	35.1	98.3	35.6	100	35.9
	43	81.3	35.5	83.1	35.7	85.0	36.0	86.9	36.2	88.8	36.5	90.7	36.8	94.6	37.3	96.6	37.5
109 (130%)	10	78.0	11.3	85.8	12.2	93.6	13.1	101	14.1	109	15.0	117	16.9	128	19.9	131	20.1
	15	78.0	11.3	85.8	12.4	93.6	14.2	101	16.2	109	18.4	117	20.8	124	22.2	126	22.4
	21	78.0	13.7	85.8	15.7	93.6	18.0	101	20.6	109	23.4	113	24.7	118	25.1	120	25.3
	23	78.0	14.7	85.8	17.0	93.6	19.5	101	22.2	109	25.3	111	25.7	116	26.1	118	26.3
	25	78.0	15.9	85.8	18.3	93.6	21.0	101	24.0	107	26.4	109	26.6	113	27.0	116	27.3
	27	78.0	17.1	85.8	19.7	93.6	22.7	101	26.0	105	27.4	107	27.6	111	28.0	113	28.3
	30	78.0	19.1	85.8	22.1	93.6	25.5	100	28.7	102	28.9	104	29.2	108	29.7	110	30.0
	33	78.0	21.3	85.8	24.9	93.6	29.1	96.9	30.4	98.9	30.6	100	30.9	104	31.4	106	31.7
	35	78.0	23.2	85.8	27.2	92.7	31.2	94.7	31.5	96.6	31.8	98.6	32.0	102	32.5	104	32.8
	37	78.0	25.3	85.8	29.9	90.5	32.4	92.4	32.6	94.3	32.9	96.3	33.1	100	33.7	102	33.9
	40	78.0	29.0	85.2	33.8	87.0	34.1	88.9	34.3	90.8	34.6	92.7	34.8	96.6	35.4	98.5	35.6
	43	78.0	33.3	81.8	35.5	83.6	35.8	85.4	36.0	87.3	36.3	89.2	36.5	92.9	37.1	94.8	37.3
100 (120%)	10	72.0	10.5	79.2	11.4	86.4	12.3	93.6	13.1	100	14.0	108	14.9	122	18.3	128	19.8
	15	72.0	10.5	79.2	11.4	86.4	12.6	93.6	14.2	100	16.0	108	18.0	121	22.0	123	22.2
	21	72.0	12.2	79.2	14.0	86.4	15.9	93.6	18.0	100	20.4	108	22.9	115	24.9	117	25.1
	23	72.0	13.2	79.2	15.1	86.4	17.2	93.6	19.5	100	22.0	108	24.8	113	25.8	115	26.0
	25	72.0	14.2	79.2	16.2	86.4	18.5	93.6	21.0	100	23.8	107	26.4	111	26.8	113	27.0
	27	72.0	15.3	79.2	17.5	86.4	20.0	93.6	22.7	100	25.7	105	27.3	109	27.7	111	28.0
	30	72.0	17.0	79.2	19.5	86.4	22.3	93.6	25.5	100	28.7	102	28.9	106	29.4	108	29.7
	33	72.0	19.0	79.2	21.8	86.4	25.2	93.6	29.1	96.8	30.4	98.8	30.6	102	31.1	104	31.4
	35	72.0	20.4	79.2	23.8	86.4	27.6	92.7	31.3	94.6	31.5	96.6	31.7	100	32.3	102	32.5
	37	72.0	22.2	79.2	26.0	86.4	30.2	90.5	32.4	92.4	32.6	94.3	32.9	98.1	33.4	100	33.6
	40	72.0	25.3	79.2	29.7	85.3	33.8	87.2	34.1	89.0	34.3	90.9	34.6	94.6	35.1	96.5	35.3
	43	72.0	29.0	79.2	34.3	82.0	35.6	83.8	35.8	85.6	36.0	87.4	36.3	91.1	36.8	93.0	37.1
92.4 (110%)	10	66.0	9.8	72.6	10.6	79.2	11.4	85.8	12.2	92.4	13.0	99.0	13.8	112	15.6	118	17.3
	15	66.0	9.8	72.6	10.6	79.2	11.4	85.8	12.4	92.4	13.9	99.0	15.6	112	19.3	118	21.4
	21	66.0	10.9	72.6	12.4	79.2	14.0	85.8	15.7	92.4	17.7	99.0	19.8	112	24.6	114	24.8
	23	66.0	11.7	72.6	13.3	79.2	15.1	85.8	17.0	92.4	19.1	99.0	21.3	110	25.5	112	25.7
	25	66.0	12.6	72.6	14.4	79.2	16.2	85.8	18.3	92.4	20.6	99.0	23.1	108	26.5	110	26.7
	27	66.0	13.6	72.6	15.4	79.2	17.5	85.8	19.7	92.4	22.2	99.0	24.9	106	27.5	108	27.7
	30	66.0	15.1	72.6	17.2	79.2	19.5	85.8	22.1	92.4	24.9	99.0	28.2	103	29.1	105	29.3
	33	66.0	16.8	72.6	19.2	79.2	21.8	85.8	24.9	92.4	28.4	96.4	30.3	100	30.8	102	31.0
	35	66.0	18.0	72.6	20.7	79.2	23.8	85.8	27.2	92.4	31.2	94.3	31.5	98.0	31.9	99.9	32.2
	37	66.0	19.4	72.6	22.5	79.2	26.0	85.8	29.9	90.3	32.4	92.1	32.6	95.8	33.1	97.7	33.3
	40	66.0	22.1	72.6	25.7	79.2	29.7	85.2	33.8	87.0	34.1	88.8	34.3	92.4	34.8	94.3	35.0
	43	66.0	25.1	72.6	29.4	79.2	34.3	81.9	35.5	83.7	35.8	85.4	36.0	89.0	36.5	90.8	36.8

TC : Total Capacity kW.

PI : Power Input kW (Compressor + Outdoor fan motor).

The data is based on the following conditions. Pipe length : 7.5 m; Height difference : 0 m.

MODEL SELECTION

■ MODELS : AJ*A90L + AJ* A90U + AJ*A90U

• CAPACITY : 84.0kW (30HP)

Total rated cooling capacity of indoor unit	Outdoor temperature	Indoor temperature															
		20℃CDB / 15℃CWB		23℃CDB / 16℃CWB		24℃CDB / 17℃CWB		26℃CDB / 18℃CWB		27℃CDB / 19℃CWB		28℃CDB / 20℃CWB		30℃CDB / 22℃WB		32℃CDB / 23℃CWB	
	(℃DB)	TC	PI	TC	PI	TC	PI	TC	PI	TC	PI	TC	PI	TC	PI	TC	PI
84.0 (100%)	10	60.0	9.09	66.0	9.81	72.0	10.5	78.0	11.3	84.0	12.0	90.0	12.7	102	14.1	108	14.9
	15	60.0	9.09	66.0	9.81	72.0	10.5	78.0	11.3	84.0	12.0	90.0	13.4	102	16.3	108	18.0
	21	60.0	9.66	66.0	10.9	72.0	12.2	78.0	13.7	84.0	15.2	90.0	16.9	102	20.8	108	22.9
	23	60.0	10.4	66.0	11.7	72.0	13.2	78.0	14.7	84.0	16.4	90.0	18.3	102	22.5	108	24.8
	25	60.0	11.2	66.0	12.6	72.0	14.2	78.0	15.9	84.0	17.7	90.0	19.7	102	24.3	107	26.4
	27	60.0	12.0	66.0	13.6	72.0	15.3	78.0	17.1	84.0	19.1	90.0	21.3	102	26.3	105	27.3
	30	60.0	13.3	66.0	15.1	72.0	17.0	78.0	19.1	84.0	21.4	90.0	23.9	100	28.7	102	28.9
	33	60.0	14.8	66.0	16.8	72.0	19.0	78.0	21.3	84.0	24.0	90.0	27.1	97.4	30.4	99.3	30.7
	35	60.0	15.9	66.0	18.0	72.0	20.4	78.0	23.2	84.0	26.3	90.0	29.7	95.3	31.6	97.1	31.8
	37	60.0	17.0	66.0	19.4	72.0	22.2	78.0	25.3	84.0	28.7	89.6	32.3	93.2	32.7	95.0	33.0
	40	60.0	19.2	66.0	22.1	72.0	25.3	78.0	29.0	84.0	33.1	86.4	34.0	90.0	34.5	91.7	34.7
	43	60.0	21.7	66.0	25.1	72.0	29.0	78.0	33.3	81.5	35.5	83.2	35.7	86.7	36.2	88.4	36.4
75.6 (90%)	10	54.0	8.36	59.4	9.01	64.8	9.66	70.2	10.3	75.6	11.0	81.0	11.6	91.8	12.9	97.2	13.6
	15	54.0	8.36	59.4	9.01	64.8	9.66	70.2	10.3	75.6	11.0	81.0	11.6	91.8	13.8	97.2	15.1
	21	54.0	8.55	59.4	9.54	64.8	10.6	70.2	11.8	75.6	13.1	81.0	14.4	91.8	17.5	97.2	19.2
	23	54.0	9.16	59.4	10.3	64.8	11.5	70.2	12.7	75.6	14.1	81.0	15.6	91.8	18.9	97.2	20.7
	25	54.0	9.83	59.4	11.0	64.8	12.3	70.2	13.7	75.6	15.2	81.0	16.8	91.8	20.4	97.2	22.4
	27	54.0	10.5	59.4	11.8	64.8	13.2	70.2	14.7	75.6	16.3	81.0	18.1	91.8	22.0	97.2	24.2
	30	54.0	11.7	59.4	13.2	64.8	14.7	70.2	16.4	75.6	18.2	81.0	20.2	91.8	24.7	97.2	27.2
	33	54.0	13.0	59.4	14.6	64.8	16.4	70.2	18.3	75.6	20.4	81.0	22.6	91.8	28.1	96.0	30.3
	35	54.0	13.9	59.4	15.6	64.8	17.6	70.2	19.7	75.6	22.0	81.0	24.7	91.8	30.8	94.0	31.4
	37	54.0	14.8	59.4	16.8	64.8	18.9	70.2	21.4	75.6	24.0	81.0	27.0	90.2	32.3	91.9	32.6
	40	54.0	16.6	59.4	18.9	64.8	21.5	70.2	24.3	75.6	27.4	81.0	30.9	87.1	34.1	88.8	34.3
	43	54.0	18.7	59.4	21.4	64.8	24.4	70.2	27.8	75.6	31.5	80.7	35.4	84.0	35.8	85.6	36.1
67.2 (80%)	10	48.0	7.64	52.8	8.22	57.6	8.80	62.4	9.37	67.2	9.95	72.0	10.5	81.6	11.7	86.4	12.3
	15	48.0	7.64	52.8	8.22	57.6	8.80	62.4	9.37	67.2	9.95	72.0	10.5	81.6	11.7	86.4	12.6
	21	48.0	7.81	52.8	8.41	57.6	9.20	62.4	10.1	67.2	11.2	72.0	12.2	81.6	14.6	86.4	15.9
	23	48.0	8.16	52.8	8.93	57.6	9.89	62.4	10.9	67.2	12.0	72.0	13.2	81.6	15.7	86.4	17.2
	25	48.0	8.60	52.8	9.58	57.6	10.6	62.4	11.7	67.2	12.9	72.0	14.2	81.6	17.0	86.4	18.5
	27	48.0	9.21	52.8	10.3	57.6	11.4	62.4	12.6	67.2	13.9	72.0	15.3	81.6	18.3	86.4	20.0
	30	48.0	10.2	52.8	11.4	57.6	12.7	62.4	14.0	67.2	15.5	72.0	17.0	81.6	20.4	86.4	22.3
	33	48.0	11.3	52.8	12.6	57.6	14.0	62.4	15.6	67.2	17.2	72.0	19.0	81.6	22.9	86.4	25.2
	35	48.0	12.0	52.8	13.5	57.6	15.0	62.4	16.7	67.2	18.5	72.0	20.4	81.6	25.0	86.4	27.6
	37	48.0	12.9	52.8	14.4	57.6	16.1	62.4	17.9	67.2	20.0	72.0	22.2	81.6	27.3	86.4	30.2
	40	48.0	14.2	52.8	16.1	57.6	18.1	62.4	20.3	67.2	22.7	72.0	25.3	81.6	31.4	85.5	33.9
	43	48.0	16.0	52.8	18.1	57.6	20.5	62.4	23.0	67.2	25.9	72.0	29.0	80.9	35.4	82.5	35.6
58.8 (70%)	10	42.0	6.92	46.2	7.42	50.4	7.93	54.6	8.43	58.8	8.94	63.0	9.45	71.4	10.5	75.6	11.0
	15	42.0	6.92	46.2	7.42	50.4	7.93	54.6	8.43	58.8	8.94	63.0	9.45	71.4	10.5	75.6	11.0
	21	42.0	7.07	46.2	7.59	50.4	8.11	54.6	8.64	58.8	9.43	63.0	10.3	71.4	12.1	75.6	13.1
	23	42.0	7.37	46.2	7.92	50.4	8.48	54.6	9.28	58.8	10.1	63.0	11.1	71.4	13.0	75.6	14.1
	25	42.0	7.69	46.2	8.27	50.4	9.08	54.6	9.96	58.8	10.9	63.0	11.9	71.4	14.0	75.6	15.2
	27	42.0	8.02	46.2	8.83	50.4	9.73	54.6	10.7	58.8	11.7	63.0	12.8	71.4	15.1	75.6	16.3
	30	42.0	8.81	46.2	9.76	50.4	10.8	54.6	11.8	58.8	13.0	63.0	14.2	71.4	16.8	75.6	18.2
	33	42.0	9.70	46.2	10.8	50.4	11.9	54.6	13.1	58.8	14.4	63.0	15.8	71.4	18.7	75.6	20.4
	35	42.0	10.4	46.2	11.5	50.4	12.7	54.6	14.1	58.8	15.4	63.0	16.9	71.4	20.1	75.6	22.0
	37	42.0	11.0	46.2	12.3	50.4	13.6	54.6	15.0	58.8	16.6	63.0	18.2	71.4	21.9	75.6	24.0
	40	42.0	12.2	46.2	13.6	50.4	15.1	54.6	16.8	58.8	18.6	63.0	20.6	71.4	25.0	75.6	27.4
	43	42.0	13.5	46.2	15.2	50.4	17.0	54.6	19.0	58.8	21.1	63.0	23.4	71.4	28.6	75.6	31.5
50.4 (60%)	10	36.0	6.20	39.6	6.63	43.2	7.06	46.8	7.50	50.4	7.93	54.0	8.36	61.2	9.23	64.8	9.66
	15	36.0	6.20	39.6	6.63	43.2	7.06	46.8	7.50	50.4	7.93	54.0	8.36	61.2	9.23	64.8	9.66
	21	36.0	6.32	39.6	6.77	43.2	7.22	46.8	7.66	50.4	8.11	54.0	8.55	61.2	9.90	64.8	10.6
	23	36.0	6.59	39.6	7.06	43.2	7.53	46.8	8.00	50.4	8.48	54.0	9.16	61.2	10.7	64.8	11.5
	25	36.0	6.86	39.6	7.36	43.2	7.86	46.8	8.37	50.4	9.08	54.0	9.83	61.2	11.5	64.8	12.3
	27	36.0	7.14	39.6	7.67	43.2	8.22	46.8	8.96	50.4	9.73	54.0	10.5	61.2	12.3	64.8	13.2
	30	36.0	7.58	39.6	8.29	43.2	9.07	46.8	9.90	50.4	10.8	54.0	11.7	61.2	13.7	64.8	14.7
	33	36.0	8.27	39.6	9.12	43.2	10.0	46.8	10.9	50.4	11.9	54.0	13.0	61.2	15.2	64.8	16.4
	35	36.0	8.80	39.6	9.71	43.2	10.7	46.8	11.7	50.4	12.7	54.0	13.9	61.2	16.3	64.8	17.6
	37	36.0	9.36	39.6	10.4	43.2	11.4	46.8	12.5	50.4	13.6	54.0	14.8	61.2	17.5	64.8	18.9
	40	36.0	10.3	39.6	11.4	43.2	12.6	46.8	13.8	50.4	15.1	54.0	16.6	61.2	19.7	64.8	21.5
	43	36.0	11.3	39.6	12.6	43.2	14.0	46.8	15.5	50.4	17.0	54.0	18.7	61.2	22.4	64.8	24.4
42.0 (50%)	10	30.0	5.47	33.0	5.83	36.0	6.20	39.0	6.56	42.0	6.92	45.0	7.28	51.0	8.00	54.0	8.36
	15	30.0	5.47	33.0	5.83	36.0	6.20	39.0	6.56	42.0	6.92	45.0	7.28	51.0	8.00	54.0	8.36
	21	30.0	5.58	33.0	5.95	36.0	6.32	39.0	6.70	42.0	7.07	45.0	7.44	51.0	8.18	54.0	8.55
	23	30.0	5.80	33.0	6.19	36.0	6.59	39.0	6.98	42.0	7.37	45.0	7.77	51.0	8.59	54.0	9.16
	25	30.0	6.02	33.0	6.44	36.0	6.86	39.0	7.27	42.0	7.69	45.0	8.11	51.0	9.21	54.0	9.83
	27	30.0	6.26	33.0	6.70	36.0	7.14	39.0	7.58	42.0	8.02	45.0	8.58	51.0	9.86	54.0	10.5
	30	30.0	6.62	33.0	7.10	36.0	7.58	39.0	8.16	42.0	8.81	45.0	9.48	51.0	10.9	54.0	11.7
	33	30.0	7.01	33.0	7.60	36.0	8.27	39.0	8.97	42.0	9.70	45.0	10.5	51.0	12.1	54.0	13.0
	35	30.0	7.38	33.0	8.08	36.0	8.80	39.0	9.56	42.0	10.4	45.0	11.2	51.0	12.9	54.0	13.9
	37	30.0	7.83	33.0	8.58	36.0	9.36	39.0	10.2	42.0	11.0	45.0	11.9	51.0	13.8	54.0	14.8
	40	30.0	8.56	33.0	9.40	36.0	10.3	39.0	11.2	42.0	12.2	45.0	13.2	51.0	15.4	54.0	16.6
	43	30.0	9.36	33.0	10.3	36.0	11.3	39.0	12.4	42.0	13.5	45.0	14.7	51.0	17.3	54.0	18.7

TC : Total Capacity kW.

PI : Power Input kW (Compressor + Outdoor fan motor).

The data is based on the following conditions. Pipe length : 7.5 m; Height difference : 0 m.

MODEL SELECTION

■ MODELS : AJ*126L + AJ*A90U + AJ*A72U

• CAPACITY : 90.4kW (32HP)

Total rated cooling capacity of indoor unit	Outdoor temperature	Indoor temperature															
		20°CDB / 15°CWB		23°CDB / 16°CWB		24°CDB / 17°CWB		26°CDB / 18°CWB		27°CDB / 19°CWB		28°CDB / 20°CWB		30°CDB / 22°CWB		32°CDB / 23°CWB	
	(°CDB)	TC	PI	TC	PI	TC	PI	TC	PI	TC	PI	TC	PI	TC	PI	TC	PI
135 (150%)	10	96.9	14.0	106	15.2	116	16.4	125	18.6	135	21.4	139	22.0	144	22.4	147	22.6
	15	96.9	14.7	106	17.1	116	19.9	125	22.9	131	24.4	133	24.6	139	25.1	141	25.3
	21	96.9	18.7	106	21.8	116	25.3	122	27.3	124	27.6	127	27.8	132	28.3	134	28.5
	23	96.9	20.2	106	23.6	116	27.4	119	28.4	122	28.6	124	28.9	129	29.3	132	29.6
	25	96.9	21.8	106	25.5	115	29.2	117	29.4	120	29.7	122	29.9	127	30.4	129	30.7
	27	96.9	23.5	106	27.6	113	30.2	115	30.5	117	30.7	120	31.0	124	31.6	127	31.9
	30	96.9	26.4	106	31.2	109	32.0	111	32.3	114	32.6	116	32.9	120	33.5	123	33.8
	33	96.9	30.0	103	33.6	105	33.9	107	34.1	110	34.4	112	34.7	116	35.3	119	35.6
	35	96.9	32.9	101	34.8	103	35.1	105	35.4	107	35.7	109	36.0	114	36.6	116	36.9
	37	96.4	35.8	98.5	36.1	100	36.4	102	36.7	104	36.9	107	37.2	111	37.8	113	38.1
	40	92.6	37.7	94.7	37.9	96.8	38.2	98.9	38.5	101	38.8	103	39.1	107	39.7	109	40.0
	43	88.7	39.5	90.8	39.8	92.8	40.1	94.9	40.4	97.0	40.7	99.1	41.0	103	41.6	105	41.9
126 (140%)	10	90.4	13.2	99.4	14.3	108	15.5	117	16.6	126	18.7	135	21.4	141	22.2	144	22.4
	15	90.4	13.2	99.4	15.3	108	17.7	117	20.3	126	23.2	131	24.4	136	24.8	139	25.0
	21	90.4	16.8	99.4	19.5	108	22.5	117	25.8	122	27.3	124	27.6	129	28.0	132	28.3
	23	90.4	18.1	99.4	21.1	108	24.3	117	28.0	120	28.4	122	28.6	127	29.1	129	29.4
	25	90.4	19.6	99.4	22.7	108	26.3	115	29.2	118	29.5	120	29.7	125	30.2	127	30.4
	27	90.4	21.1	99.4	24.6	108	28.5	113	30.3	115	30.5	118	30.8	122	31.3	125	31.6
	30	90.4	23.6	99.4	27.6	107	31.7	109	32.0	112	32.3	114	32.6	118	33.2	121	33.5
	33	90.4	26.6	99.4	31.5	104	33.6	106	33.9	108	34.2	110	34.5	115	35.1	117	35.4
	35	90.4	29.1	99.4	34.6	101	34.9	103	35.2	105	35.5	108	35.8	112	36.3	114	36.6
	37	90.4	31.9	97.0	35.9	99.1	36.1	101	36.4	103	36.7	105	37.0	109	37.6	111	37.9
	40	90.4	36.7	93.2	37.7	95.3	38.0	97.4	38.3	99.4	38.6	101	38.9	105	39.5	107	39.8
	43	87.4	39.3	89.4	39.6	91.4	39.9	93.5	40.2	95.5	40.5	97.6	40.8	101	41.4	103	41.7
117 (130%)	10	83.9	12.4	92.3	13.4	100	14.5	109	15.5	117	16.6	125	18.6	138	22.0	141	22.1
	15	83.9	12.4	92.3	13.7	100	15.6	109	17.8	117	20.3	125	22.9	133	24.6	136	24.8
	21	83.9	15.1	92.3	17.4	100	19.9	109	22.7	117	25.8	122	27.3	127	27.8	129	28.0
	23	83.9	16.3	92.3	18.7	100	21.5	109	24.6	117	28.0	120	28.4	124	28.9	127	29.1
	25	83.9	17.5	92.3	20.2	100	23.2	109	26.6	115	29.2	118	29.5	122	29.9	124	30.2
	27	83.9	18.9	92.3	21.8	100	25.1	109	28.8	113	30.3	115	30.5	120	31.0	122	31.3
	30	83.9	21.1	92.3	24.4	100	28.2	107	31.8	110	32.0	112	32.3	116	32.9	118	33.2
	33	83.9	23.6	92.3	27.6	100	32.3	104	33.7	106	33.9	108	34.2	112	34.8	115	35.1
	35	83.9	25.6	92.3	30.2	99.8	34.6	101	34.9	103	35.2	106	35.5	110	36.1	112	36.4
	37	83.9	28.0	92.3	33.1	97.3	35.9	99.4	36.2	101	36.5	103	36.8	107	37.3	109	37.6
	40	83.9	32.1	91.6	37.5	93.6	37.8	95.7	38.1	97.7	38.4	99.8	38.7	103	39.2	106	39.5
	43	83.9	37.0	87.9	39.4	89.9	39.7	91.9	40.0	93.9	40.3	95.9	40.5	100	41.1	102	41.4
108 (120%)	10	77.5	11.6	85.2	12.6	93.0	13.5	100	14.5	108	15.5	116	16.4	131	20.2	137	21.9
	15	77.5	11.6	85.2	12.6	93.0	13.8	100	15.6	108	17.7	116	19.9	130	24.3	132	24.5
	21	77.5	13.5	85.2	15.4	93.0	17.5	100	19.9	108	22.5	116	25.3	124	27.5	126	27.7
	23	77.5	14.5	85.2	16.6	93.0	18.9	100	21.5	108	24.3	116	27.4	122	28.6	124	28.8
	25	77.5	15.6	85.2	17.9	93.0	20.4	100	23.2	108	26.3	115	29.2	119	29.7	122	29.9
	27	77.5	16.8	85.2	19.3	93.0	22.1	100	25.1	108	28.5	113	30.3	117	30.7	119	31.0
	30	77.5	18.8	85.2	21.6	93.0	24.7	100	28.2	107	31.7	109	32.0	114	32.6	116	32.9
	33	77.5	21.0	85.2	24.2	93.0	27.9	100	32.3	104	33.7	106	33.9	110	34.5	112	34.8
	35	77.5	22.6	85.2	26.3	93.0	30.6	99.8	34.6	101	34.9	103	35.2	108	35.8	110	36.0
	37	77.5	24.6	85.2	28.8	93.0	33.5	97.4	35.9	99.4	36.2	101	36.5	105	37.0	107	37.3
	40	77.5	28.1	85.2	33.0	91.8	37.5	93.8	37.8	95.8	38.1	97.8	38.4	101	38.9	103	39.2
	43	77.5	32.1	85.2	38.1	88.2	39.5	90.1	39.7	92.1	40.0	94.0	40.3	98.0	40.8	100	41.1
99.4 (110%)	10	71.0	10.8	78.1	11.7	85.2	12.6	92.3	13.4	99.4	14.3	106	15.2	120	17.2	127	19.1
	15	71.0	10.8	78.1	11.7	85.2	12.6	92.3	13.7	99.4	15.3	106	17.1	120	21.3	127	23.6
	21	71.0	12.0	78.1	13.6	85.2	15.4	92.3	17.4	99.4	19.5	106	21.8	120	27.1	123	27.4
	23	71.0	12.9	78.1	14.7	85.2	16.6	92.3	18.7	99.4	21.1	106	23.6	118	28.3	121	28.5
	25	71.0	13.9	78.1	15.8	85.2	17.9	92.3	20.2	99.4	22.7	106	25.5	116	29.3	118	29.6
	27	71.0	14.9	78.1	17.0	85.2	19.3	92.3	21.8	99.4	24.6	106	27.6	114	30.4	116	30.6
	30	71.0	16.6	78.1	19.0	85.2	21.6	92.3	24.4	99.4	27.6	106	31.2	111	32.2	113	32.5
	33	71.0	18.5	78.1	21.2	85.2	24.2	92.3	27.6	99.4	31.5	103	33.6	107	34.1	109	34.4
	35	71.0	19.9	78.1	22.8	85.2	26.3	92.3	30.2	99.4	34.6	101	34.9	105	35.4	107	35.7
	37	71.0	21.5	78.1	24.9	85.2	28.8	92.3	33.1	97.1	35.9	99.1	36.1	103	36.7	105	37.0
	40	71.0	24.4	78.1	28.4	85.2	33.0	91.7	37.5	93.6	37.8	95.5	38.1	99.4	38.6	101	38.9
	43	71.0	27.9	78.1	32.6	85.2	38.1	88.1	39.4	90.0	39.7	91.9	40.0	95.7	40.5	97.7	40.8

TC : Total Capacity kW.

PI : Power Input kW (Compressor + Outdoor fan motor).

The data is based on the following conditions. Pipe length : 7.5 m; Height difference : 0 m.

MODEL SELECTION

■ MODELS : AJ∗126L + AJ∗A90U + AJ∗A72U

• CAPACITY : 90.4kW (32HP)

Total rated cooling capacity of indoor unit	Outdoor temperature	Indoor temperature															
		20℃CDB / 15℃CWB		23℃CDB / 16℃CWB		24℃CDB / 17℃CWB		26℃CDB / 18℃CWB		27℃CDB / 19℃CWB		28℃CDB / 20℃CWB		30℃CDB / 22℃CWB		32℃CDB / 23℃CWB	
	(℃DB)	TC	PI	TC	PI	TC	PI	TC	PI	TC	PI	TC	PI	TC	PI	TC	PI
90.4 (100%)	10	64.6	9.99	71.0	10.8	77.5	11.6	83.9	12.4	90.4	13.2	96.9	14.0	109	15.6	116	16.4
	15	64.6	9.99	71.0	10.8	77.5	11.6	83.9	12.4	90.4	13.2	96.9	14.7	109	18.0	116	19.9
	21	64.6	10.6	71.0	12.0	77.5	13.5	83.9	15.1	90.4	16.8	96.9	18.7	109	22.9	116	25.3
	23	64.6	11.4	71.0	12.9	77.5	14.5	83.9	16.3	90.4	18.1	96.9	20.2	109	24.8	116	27.4
	25	64.6	12.3	71.0	13.9	77.5	15.6	83.9	17.5	90.4	19.6	96.9	21.8	109	26.9	115	29.2
	27	64.6	13.2	71.0	14.9	77.5	16.8	83.9	18.9	90.4	21.1	96.9	23.5	109	29.1	113	30.3
	30	64.6	14.7	71.0	16.6	77.5	18.8	83.9	21.1	90.4	23.6	96.9	26.4	108	31.8	110	32.1
	33	64.6	16.3	71.0	18.5	77.5	21.0	83.9	23.6	90.4	26.6	96.9	30.0	104	33.7	106	34.0
	35	64.6	17.5	71.0	19.9	77.5	22.6	83.9	25.6	90.4	29.1	96.9	32.9	102	35.0	104	35.3
	37	64.6	18.8	71.0	21.5	77.5	24.6	83.9	28.0	90.4	31.9	96.4	35.8	100	36.3	102	36.6
	40	64.6	21.2	71.0	24.4	77.5	28.1	83.9	32.1	90.4	36.7	93.0	37.7	96.8	38.2	98.7	38.5
	43	64.6	24.1	71.0	27.9	77.5	32.1	83.9	37.0	87.7	39.4	89.5	39.6	93.2	40.2	95.1	40.4
81.4 (90%)	10	58.1	9.18	63.9	9.91	69.7	10.6	75.5	11.4	81.4	12.1	87.2	12.8	98.8	14.3	104	15.0
	15	58.1	9.18	63.9	9.91	69.7	10.6	75.5	11.4	81.4	12.1	87.2	12.8	98.8	15.2	104	16.6
	21	58.1	9.40	63.9	10.5	69.7	11.7	75.5	13.0	81.4	14.4	87.2	15.9	98.8	19.3	104	21.2
	23	58.1	10.1	63.9	11.3	69.7	12.6	75.5	14.0	81.4	15.5	87.2	17.2	98.8	20.8	104	22.9
	25	58.1	10.8	63.9	12.1	69.7	13.6	75.5	15.1	81.4	16.8	87.2	18.5	98.8	22.5	104	24.7
	27	58.1	11.6	63.9	13.0	69.7	14.6	75.5	16.3	81.4	18.0	87.2	20.0	98.8	24.3	104	26.7
	30	58.1	12.9	63.9	14.5	69.7	16.2	75.5	18.1	81.4	20.2	87.2	22.3	98.8	27.3	104	30.1
	33	58.1	14.3	63.9	16.1	69.7	18.1	75.5	20.2	81.4	22.5	87.2	25.0	98.8	31.1	103	33.5
	35	58.1	15.3	63.9	17.3	69.7	19.4	75.5	21.7	81.4	24.4	87.2	27.3	98.8	34.2	101	34.8
	37	58.1	16.4	63.9	18.5	69.7	20.9	75.5	23.6	81.4	26.6	87.2	29.9	97.0	35.9	98.9	36.1
	40	58.1	18.3	63.9	20.9	69.7	23.8	75.5	26.9	81.4	30.4	87.2	34.3	93.7	37.8	95.5	38.1
	43	58.1	20.7	63.9	23.7	69.7	27.1	75.5	30.8	81.4	35.0	86.8	39.3	90.3	39.8	92.1	40.0
72.3 (80%)	10	51.7	8.38	56.8	9.02	62.0	9.67	67.2	10.3	72.3	11.0	77.5	11.6	87.8	12.9	93.0	13.5
	15	51.7	8.38	56.8	9.02	62.0	9.67	67.2	10.3	72.3	11.0	77.5	11.6	87.8	12.9	93.0	13.8
	21	51.7	8.57	56.8	9.23	62.0	10.1	67.2	11.1	72.3	12.3	77.5	13.5	87.8	16.1	93.0	17.5
	23	51.7	8.96	56.8	9.80	62.0	10.9	67.2	12.0	72.3	13.2	77.5	14.5	87.8	17.4	93.0	18.9
	25	51.7	9.44	56.8	10.5	62.0	11.7	67.2	12.9	72.3	14.2	77.5	15.6	87.8	18.7	93.0	20.4
	27	51.7	10.1	56.8	11.3	62.0	12.5	67.2	13.9	72.3	15.3	77.5	16.8	87.8	20.2	93.0	22.1
	30	51.7	11.2	56.8	12.5	62.0	13.9	67.2	15.5	72.3	17.1	77.5	18.8	87.8	22.6	93.0	24.7
	33	51.7	12.4	56.8	13.9	62.0	15.5	67.2	17.2	72.3	19.0	77.5	21.0	87.8	25.3	93.0	27.9
	35	51.7	13.3	56.8	14.9	62.0	16.6	67.2	18.4	72.3	20.4	77.5	22.6	87.8	27.7	93.0	30.6
	37	51.7	14.2	56.8	15.9	62.0	17.8	67.2	19.8	72.3	22.1	77.5	24.6	87.8	30.3	93.0	33.5
	40	51.7	15.7	56.8	17.8	62.0	20.0	67.2	22.5	72.3	25.1	77.5	28.1	87.8	34.8	91.9	37.6
	43	51.7	17.7	56.8	20.1	62.0	22.7	67.2	25.5	72.3	28.7	77.5	32.1	87.0	39.3	88.7	39.5
63.3 (70%)	10	45.2	7.58	49.7	8.14	54.2	8.70	58.8	9.26	63.3	9.83	67.8	10.4	76.8	11.5	81.4	12.1
	15	45.2	7.58	49.7	8.14	54.2	8.70	58.8	9.26	63.3	9.83	67.8	10.4	76.8	11.5	81.4	12.1
	21	45.2	7.74	49.7	8.32	54.2	8.90	58.8	9.49	63.3	10.4	67.8	11.3	76.8	13.3	81.4	14.4
	23	45.2	8.08	49.7	8.70	54.2	9.31	58.8	10.2	63.3	11.1	67.8	12.2	76.8	14.3	81.4	15.5
	25	45.2	8.43	49.7	9.08	54.2	9.97	58.8	11.0	63.3	12.0	67.8	13.1	76.8	15.5	81.4	16.8
	27	45.2	8.80	49.7	9.70	54.2	10.7	58.8	11.8	63.3	12.9	67.8	14.1	76.8	16.6	81.4	18.0
	30	45.2	9.67	49.7	10.7	54.2	11.9	58.8	13.0	63.3	14.3	67.8	15.6	76.8	18.6	81.4	20.2
	33	45.2	10.7	49.7	11.9	54.2	13.1	58.8	14.5	63.3	15.9	67.8	17.4	76.8	20.7	81.4	22.5
	35	45.2	11.4	49.7	12.7	54.2	14.1	58.8	15.5	63.3	17.0	67.8	18.7	76.8	22.3	81.4	24.4
	37	45.2	12.2	49.7	13.6	54.2	15.0	58.8	16.6	63.3	18.3	67.8	20.1	76.8	24.3	81.4	26.6
	40	45.2	13.4	49.7	15.0	54.2	16.7	58.8	18.6	63.3	20.6	67.8	22.8	76.8	27.7	81.4	30.4
	43	45.2	14.9	49.7	16.8	54.2	18.8	58.8	21.0	63.3	23.4	67.8	25.9	76.8	31.7	81.4	35.0
54.2 (60%)	10	38.7	6.77	42.6	7.25	46.5	7.74	50.4	8.22	54.2	8.70	58.1	9.18	65.9	10.2	69.7	10.6
	15	38.7	6.77	42.6	7.25	46.5	7.74	50.4	8.22	54.2	8.70	58.1	9.18	65.9	10.2	69.7	10.6
	21	38.7	6.91	42.6	7.41	46.5	7.91	50.4	8.40	54.2	8.90	58.1	9.40	65.9	10.9	69.7	11.7
	23	38.7	7.21	42.6	7.73	46.5	8.26	50.4	8.78	54.2	9.31	58.1	10.1	65.9	11.7	69.7	12.6
	25	38.7	7.51	42.6	8.06	46.5	8.62	50.4	9.19	54.2	9.97	58.1	10.8	65.9	12.6	69.7	13.6
	27	38.7	7.82	42.6	8.41	46.5	9.02	50.4	9.83	54.2	10.7	58.1	11.6	65.9	13.5	69.7	14.6
	30	38.7	8.31	42.6	9.09	46.5	9.97	50.4	10.9	54.2	11.9	58.1	12.9	65.9	15.1	69.7	16.2
	33	38.7	9.08	42.6	10.0	46.5	11.0	50.4	12.0	54.2	13.1	58.1	14.3	65.9	16.7	69.7	18.1
	35	38.7	9.67	42.6	10.7	46.5	11.8	50.4	12.9	54.2	14.1	58.1	15.3	65.9	18.0	69.7	19.4
	37	38.7	10.3	42.6	11.4	46.5	12.5	50.4	13.8	54.2	15.0	58.1	16.4	65.9	19.3	69.7	20.9
	40	38.7	11.3	42.6	12.5	46.5	13.8	50.4	15.2	54.2	16.7	58.1	18.3	65.9	21.8	69.7	23.8
	43	38.7	12.5	42.6	13.9	46.5	15.5	50.4	17.1	54.2	18.8	58.1	20.7	65.9	24.8	69.7	27.1
45.2 (50%)	10	32.3	5.97	35.5	6.37	38.7	6.77	42.0	7.17	45.2	7.58	48.4	7.98	54.9	8.78	58.1	9.18
	15	32.3	5.97	35.5	6.37	38.7	6.77	42.0	7.17	45.2	7.58	48.4	7.98	54.9	8.78	58.1	9.18
	21	32.3	6.09	35.5	6.50	38.7	6.91	42.0	7.33	45.2	7.74	48.4	8.16	54.9	8.98	58.1	9.40
	23	32.3	6.33	35.5	6.77	38.7	7.21	42.0	7.64	45.2	8.08	48.4	8.52	54.9	9.42	58.1	10.1
	25	32.3	6.58	35.5	7.05	38.7	7.51	42.0	7.97	45.2	8.43	48.4	8.90	54.9	10.1	58.1	10.8
	27	32.3	6.84	35.5	7.33	38.7	7.82	42.0	8.31	45.2	8.80	48.4	9.42	54.9	10.8	58.1	11.6
	30	32.3	7.25	35.5	7.78	38.7	8.31	42.0	8.95	45.2	9.67	48.4	10.4	54.9	12.0	58.1	12.9
	33	32.3	7.68	35.5	8.33	38.7	9.08	42.0	9.86	45.2	10.7	48.4	11.5	54.9	13.3	58.1	14.3
	35	32.3	8.09	35.5	8.86	38.7	9.67	42.0	10.5	45.2	11.4	48.4	12.3	54.9	14.3	58.1	15.3
	37	32.3	8.59	35.5	9.42	38.7	10.3	42.0	11.2	45.2	12.2	48.4	13.1	54.9	15.3	58.1	16.4
	40	32.3	9.40	35.5	10.3	38.7	11.3	42.0	12.3	45.2	13.4	48.4	14.5	54.9	17.0	58.1	18.3
	43	32.3	10.3	35.5	11.3	38.7	12.5	42.0	13.7	45.2	14.9	48.4	16.3	54.9	19.1	58.1	20.7

TC : Total Capacity kW.

PI : Power Input kW (Compressor + Outdoor fan motor).

The data is based on the following conditions. Pipe length : 7.5 m; Height difference : 0 m.

MODEL SELECTION

■ MODELS : AJ∗126L + AJ∗A90U + AJ∗A90U

• CAPACITY : 96.0kW (34HP)

Total rated cooling capacity of indoor unit	Outdoor temperature	Indoor temperature															
		20°CDB / 15°CWB		23°CDB / 16°CWB		24°CDB / 17°CWB		26°CDB / 18°CWB		27°CDB / 19°CWB		28°CDB / 20°CWB		30°CDB / 22°CWB		32°CDB / 23°CWB	
	(°CDB)	TC	PI	TC	PI	TC	PI	TC	PI	TC	PI	TC	PI	TC	PI	TC	PI
144 (150%)	10	102	14.8	113	16.1	123	17.4	133	19.6	144	22.6	148	23.3	153	23.7	156	23.9
	15	102	15.5	113	18.1	123	21.0	133	24.3	139	25.8	142	26.1	147	26.5	150	26.8
	21	102	19.8	113	23.1	123	26.8	129	29.0	132	29.2	135	29.5	140	30.0	143	30.2
	23	102	21.4	113	25.0	123	29.1	127	30.1	129	30.3	132	30.6	137	31.1	140	31.4
	25	102	23.1	113	27.0	122	30.9	124	31.2	127	31.5	130	31.7	135	32.3	137	32.5
	27	102	24.9	113	29.2	120	32.1	122	32.3	125	32.6	127	32.9	132	33.5	135	33.8
	30	102	28.0	113	33.1	116	33.9	118	34.2	121	34.5	123	34.9	128	35.5	130	35.8
	33	102	31.8	109	35.6	112	35.9	114	36.2	117	36.5	119	36.9	124	37.5	126	37.8
	35	102	34.9	107	36.9	109	37.2	111	37.6	114	37.9	116	38.2	121	38.8	123	39.1
	37	102	38.0	104	38.3	106	38.6	109	38.9	111	39.2	113	39.5	118	40.2	120	40.5
	40	98.3	40.0	100	40.3	102	40.6	105	40.9	107	41.2	109	41.5	114	42.2	116	42.5
	43	94.2	42.0	96.4	42.3	98.6	42.6	100	42.9	103	43.2	105	43.5	109	44.2	112	44.5
134 (140%)	10	96.0	13.9	105	15.1	115	16.3	124	17.5	134	19.8	144	22.6	150	23.5	153	23.7
	15	96.0	14.0	105	16.2	115	18.7	124	21.4	134	24.5	139	25.9	144	26.3	147	26.5
	21	96.0	17.8	105	20.6	115	23.8	124	27.4	130	29.0	132	29.2	137	29.7	140	30.0
	23	96.0	19.2	105	22.3	115	25.8	124	29.7	127	30.1	130	30.4	135	30.9	137	31.1
	25	96.0	20.7	105	24.1	115	27.9	122	31.0	125	31.2	127	31.5	132	32.0	135	32.3
	27	96.0	22.3	105	26.0	115	30.2	120	32.1	122	32.4	125	32.6	130	33.2	132	33.5
	30	96.0	25.0	105	29.2	114	33.7	116	34.0	119	34.3	121	34.6	126	35.2	128	35.5
	33	96.0	28.2	105	33.4	110	35.7	112	36.0	115	36.3	117	36.6	122	37.2	124	37.5
	35	96.0	30.8	105	36.7	107	37.0	110	37.3	112	37.6	114	37.9	119	38.6	121	38.9
	37	96.0	33.8	102	38.0	105	38.4	107	38.7	109	39.0	112	39.3	116	39.9	118	40.2
	40	96.0	39.0	99.0	40.1	101	40.4	103	40.7	105	41.0	107	41.3	112	41.9	114	42.2
	43	92.8	41.8	95.0	42.1	97.1	42.4	99.3	42.7	101	43.0	103	43.3	108	43.9	110	44.2
124 (130%)	10	89.1	13.1	98.1	14.2	106	15.3	115	16.4	124	17.5	133	19.6	147	23.2	150	23.4
	15	89.1	13.1	98.1	14.4	106	16.5	115	18.9	124	21.4	133	24.3	141	26.0	144	26.3
	21	89.1	15.9	98.1	18.3	106	21.0	115	24.0	124	27.4	129	29.0	134	29.4	137	29.7
	23	89.1	17.2	98.1	19.8	106	22.8	115	26.0	124	29.7	127	30.1	132	30.6	135	30.8
	25	89.1	18.5	98.1	21.4	106	24.6	115	28.2	122	31.0	125	31.2	130	31.7	132	32.0
	27	89.1	20.0	98.1	23.1	106	26.6	115	30.5	120	32.1	122	32.4	127	32.9	130	33.2
	30	89.1	22.3	98.1	25.9	106	29.9	114	33.7	116	34.0	119	34.3	123	34.9	126	35.2
	33	89.1	25.0	98.1	29.2	106	34.2	110	35.7	113	36.0	115	36.3	119	36.9	122	37.2
	35	89.1	27.2	98.1	32.0	105	36.8	108	37.1	110	37.4	112	37.7	117	38.3	119	38.6
	37	89.1	29.7	98.1	35.1	103	38.1	105	38.4	107	38.7	109	39.0	114	39.6	116	39.9
	40	89.1	34.1	97.3	39.8	99.4	40.1	101	40.4	103	40.7	105	41.0	110	41.6	112	41.9
	43	89.1	39.3	93.4	41.8	95.5	42.1	97.6	42.4	99.7	42.7	101	43.0	106	43.7	108	44.0
115 (120%)	10	82.3	12.2	90.5	13.2	98.7	14.3	106	15.3	115	16.3	123	17.4	139	21.4	146	23.2
	15	82.3	12.2	90.5	13.2	98.7	14.6	106	16.5	115	18.7	123	21.0	138	25.8	141	26.0
	21	82.3	14.2	90.5	16.3	98.7	18.5	106	21.0	115	23.8	123	26.8	131	29.2	134	29.4
	23	82.3	15.3	90.5	17.6	98.7	20.0	106	22.8	115	25.8	123	29.1	129	30.3	132	30.5
	25	82.3	16.5	90.5	19.0	98.7	21.6	106	24.6	115	27.9	122	31.0	127	31.4	129	31.7
	27	82.3	17.8	90.5	20.4	98.7	23.4	106	26.6	115	30.2	120	32.1	125	32.6	127	32.8
	30	82.3	19.9	90.5	22.9	98.7	26.2	106	29.9	114	33.7	116	34.0	121	34.6	123	34.9
	33	82.3	22.2	90.5	25.6	98.7	29.6	106	34.2	110	35.7	112	36.0	117	36.6	119	36.9
	35	82.3	23.9	90.5	27.9	98.7	32.4	105	36.8	108	37.1	110	37.3	114	37.9	116	38.2
	37	82.3	26.1	90.5	30.5	98.7	35.6	103	38.1	105	38.4	107	38.7	112	39.3	114	39.6
	40	82.3	29.7	90.5	35.0	97.5	39.8	99.6	40.1	101	40.4	103	40.7	108	41.3	110	41.6
	43	82.3	34.1	90.5	40.4	93.6	41.9	95.7	42.2	97.8	42.5	99.8	42.8	104	43.4	106	43.7
105 (110%)	10	75.4	11.4	83.0	12.3	90.5	13.2	98.1	14.2	105	15.1	113	16.1	128	18.2	135	20.2
	15	75.4	11.4	83.0	12.3	90.5	13.2	98.1	14.4	105	16.2	113	18.1	128	22.5	135	25.0
	21	75.4	12.6	83.0	14.4	90.5	16.3	98.1	18.3	105	20.6	113	23.1	128	28.8	130	29.0
	23	75.4	13.6	83.0	15.5	90.5	17.6	98.1	19.8	105	22.3	113	25.0	126	30.0	128	30.2
	25	75.4	14.7	83.0	16.7	90.5	19.0	98.1	21.4	105	24.1	113	27.0	124	31.1	126	31.3
	27	75.4	15.8	83.0	18.0	90.5	20.4	98.1	23.1	105	26.0	113	29.2	121	32.2	124	32.5
	30	75.4	17.6	83.0	20.1	90.5	22.9	98.1	25.9	105	29.2	113	33.1	118	34.2	120	34.5
	33	75.4	19.6	83.0	22.5	90.5	25.6	98.1	29.2	105	33.4	110	35.6	114	36.2	116	36.5
	35	75.4	21.1	83.0	24.2	90.5	27.9	98.1	32.0	105	36.7	107	37.0	112	37.6	114	37.9
	37	75.4	22.8	83.0	26.4	90.5	30.5	98.1	35.1	103	38.1	105	38.4	109	38.9	111	39.2
	40	75.4	25.9	83.0	30.1	90.5	35.0	97.3	39.8	99.4	40.1	101	40.4	105	41.0	107	41.3
	43	75.4	29.5	83.0	34.6	90.5	40.4	93.6	41.9	95.6	42.2	97.6	42.4	101	43.0	103	43.3

TC : Total Capacity kW.

PI : Power Input kW (Compressor + Outdoor fan motor).

The data is based on the following conditions. Pipe length : 7.5 m; Height difference : 0 m.

MODEL SELECTION

■ MODELS : AJ∗126L + AJ∗A90U + AJ∗A90U

• CAPACITY : 96.0kW (34HP)

Total rated cooling capacity of indoor unit	Outdoor temperature	Indoor temperature															
		20℃CDB / 15℃CWB		23℃CDB / 16℃CWB		24℃CDB / 17℃CWB		26℃CDB / 18℃CWB		27℃CDB / 19℃CWB		28℃CDB / 20℃CWB		30℃CDB / 22℃CWB		32℃CDB / 23℃CWB	
	(℃DB)	TC	PI	TC	PI	TC	PI	TC	PI	TC	PI	TC	PI	TC	PI	TC	PI
96.0 (100%)	10	68.6	10.5	75.4	11.4	82.3	12.2	89.1	13.1	96.0	13.9	102	14.8	116	16.5	123	17.4
	15	68.6	10.5	75.4	11.4	82.3	12.2	89.1	13.1	96.0	14.0	102	15.5	116	19.0	123	21.0
	21	68.6	11.2	75.4	12.6	82.3	14.2	89.1	15.9	96.0	17.8	102	19.8	116	24.3	123	26.8
	23	68.6	12.0	75.4	13.6	82.3	15.3	89.1	17.2	96.0	19.2	102	21.4	116	26.3	123	29.1
	25	68.6	13.0	75.4	14.7	82.3	16.5	89.1	18.5	96.0	20.7	102	23.1	116	28.5	122	31.0
	27	68.6	13.9	75.4	15.8	82.3	17.8	89.1	20.0	96.0	22.3	102	24.9	116	30.8	120	32.1
	30	68.6	15.5	75.4	17.6	82.3	19.9	89.1	22.3	96.0	25.0	102	28.0	114	33.7	117	34.0
	33	68.6	17.2	75.4	19.6	82.3	22.2	89.1	25.0	96.0	28.2	102	31.8	111	35.8	113	36.1
	35	68.6	18.5	75.4	21.1	82.3	23.9	89.1	27.2	96.0	30.8	102	34.9	108	37.2	111	37.4
	37	68.6	19.9	75.4	22.8	82.3	26.1	89.1	29.7	96.0	33.8	102	38.0	106	38.5	108	38.8
	40	68.6	22.4	75.4	25.9	82.3	29.7	89.1	34.1	96.0	39.0	98.7	40.0	102	40.6	104	40.9
	43	68.6	25.5	75.4	29.5	82.3	34.1	89.1	39.3	93.1	41.8	95.0	42.1	99.0	42.6	100	42.9
86.4 (90%)	10	61.7	9.65	67.9	10.4	74.1	11.2	80.2	12.0	86.4	12.7	92.6	13.5	104	15.0	111	15.8
	15	61.7	9.65	67.9	10.4	74.1	11.2	80.2	12.0	86.4	12.7	92.6	13.5	104	16.0	111	17.6
	21	61.7	9.88	67.9	11.0	74.1	12.3	80.2	13.7	86.4	15.2	92.6	16.8	104	20.4	111	22.4
	23	61.7	10.6	67.9	11.9	74.1	13.3	80.2	14.8	86.4	16.4	92.6	18.2	104	22.1	111	24.2
	25	61.7	11.4	67.9	12.8	74.1	14.3	80.2	15.9	86.4	17.7	92.6	19.6	104	23.8	111	26.2
	27	61.7	12.2	67.9	13.7	74.1	15.4	80.2	17.2	86.4	19.1	92.6	21.1	104	25.7	111	28.3
	30	61.7	13.6	67.9	15.3	74.1	17.2	80.2	19.2	86.4	21.3	92.6	23.7	104	28.9	111	31.9
	33	61.7	15.1	67.9	17.0	74.1	19.1	80.2	21.4	86.4	23.8	92.6	26.5	104	33.0	109	35.6
	35	61.7	16.2	67.9	18.3	74.1	20.5	80.2	23.0	86.4	25.8	92.6	29.0	104	36.3	107	36.9
	37	61.7	17.3	67.9	19.6	74.1	22.2	80.2	25.0	86.4	28.2	92.6	31.7	103	38.1	105	38.3
	40	61.7	19.4	67.9	22.1	74.1	25.2	80.2	28.5	86.4	32.3	92.6	36.4	99.5	40.1	101	40.4
	43	61.7	21.9	67.9	25.1	74.1	28.7	80.2	32.7	86.4	37.1	92.1	41.7	95.9	42.2	97.8	42.5
76.8 (80%)	10	54.9	8.79	60.3	9.48	65.8	10.2	71.3	10.9	76.8	11.5	82.3	12.2	93.3	13.6	98.7	14.3
	15	54.9	8.79	60.3	9.48	65.8	10.2	71.3	10.9	76.8	11.5	82.3	12.2	93.3	13.6	98.7	14.6
	21	54.9	9.00	60.3	9.70	65.8	10.6	71.3	11.7	76.8	12.9	82.3	14.2	93.3	17.0	98.7	18.5
	23	54.9	9.41	60.3	10.3	65.8	11.4	71.3	12.7	76.8	13.9	82.3	15.3	93.3	18.4	98.7	20.0
	25	54.9	9.92	60.3	11.1	65.8	12.3	71.3	13.6	76.8	15.0	82.3	16.5	93.3	19.8	98.7	21.6
	27	54.9	10.6	60.3	11.9	65.8	13.2	71.3	14.7	76.8	16.2	82.3	17.8	93.3	21.4	98.7	23.4
	30	54.9	11.8	60.3	13.2	65.8	14.7	71.3	16.3	76.8	18.0	82.3	19.9	93.3	23.9	98.7	26.2
	33	54.9	13.1	60.3	14.7	65.8	16.4	71.3	18.2	76.8	20.1	82.3	22.2	93.3	26.8	98.7	29.6
	35	54.9	14.0	60.3	15.7	65.8	17.5	71.3	19.5	76.8	21.6	82.3	23.9	93.3	29.3	98.7	32.4
	37	54.9	15.0	60.3	16.8	65.8	18.8	71.3	21.0	76.8	23.4	82.3	26.1	93.3	32.1	98.7	35.6
	40	54.9	16.6	60.3	18.8	65.8	21.2	71.3	23.8	76.8	26.6	82.3	29.7	93.3	36.9	97.6	39.9
	43	54.9	18.7	60.3	21.2	65.8	24.0	71.3	27.1	76.8	30.4	82.3	34.1	92.4	41.7	94.2	42.0
67.2 (70%)	10	48.0	7.94	52.8	8.54	57.6	9.14	62.4	9.74	67.2	10.3	72.0	10.9	81.6	12.1	86.4	12.7
	15	48.0	7.94	52.8	8.54	57.6	9.14	62.4	9.74	67.2	10.3	72.0	10.9	81.6	12.1	86.4	12.7
	21	48.0	8.12	52.8	8.73	57.6	9.35	62.4	9.97	67.2	10.9	72.0	11.9	81.6	14.0	86.4	15.2
	23	48.0	8.48	52.8	9.13	57.6	9.78	62.4	10.7	67.2	11.7	72.0	12.8	81.6	15.1	86.4	16.4
	25	48.0	8.85	52.8	9.54	57.6	10.5	62.4	11.5	67.2	12.6	72.0	13.8	81.6	16.3	86.4	17.7
	27	48.0	9.24	52.8	10.2	57.6	11.3	62.4	12.4	67.2	13.6	72.0	14.8	81.6	17.6	86.4	19.1
	30	48.0	10.2	52.8	11.3	57.6	12.5	62.4	13.8	67.2	15.1	72.0	16.5	81.6	19.6	86.4	21.3
	33	48.0	11.2	52.8	12.5	57.6	13.9	62.4	15.3	67.2	16.8	72.0	18.4	81.6	21.9	86.4	23.8
	35	48.0	12.0	52.8	13.4	57.6	14.8	62.4	16.4	67.2	18.0	72.0	19.8	81.6	23.6	86.4	25.8
	37	48.0	12.8	52.8	14.3	57.6	15.9	62.4	17.6	67.2	19.3	72.0	21.3	81.6	25.7	86.4	28.2
	40	48.0	14.1	52.8	15.8	57.6	17.6	62.4	19.7	67.2	21.8	72.0	24.1	81.6	29.3	86.4	32.3
	43	48.0	15.8	52.8	17.8	57.6	19.9	62.4	22.2	67.2	24.7	72.0	27.5	81.6	33.6	86.4	37.1
57.6 (60%)	10	41.1	7.08	45.3	7.60	49.4	8.11	53.5	8.62	57.6	9.14	61.7	9.65	69.9	10.7	74.1	11.2
	15	41.1	7.08	45.3	7.60	49.4	8.11	53.5	8.62	57.6	9.14	61.7	9.65	69.9	10.7	74.1	11.2
	21	41.1	7.23	45.3	7.76	49.4	8.29	53.5	8.82	57.6	9.35	61.7	9.88	69.9	11.5	74.1	12.3
	23	41.1	7.55	45.3	8.11	49.4	8.66	53.5	9.22	57.6	9.78	61.7	10.6	69.9	12.3	74.1	13.3
	25	41.1	7.87	45.3	8.46	49.4	9.05	53.5	9.65	57.6	10.5	61.7	11.4	69.9	13.3	74.1	14.3
	27	41.1	8.20	45.3	8.82	49.4	9.47	53.5	10.3	57.6	11.3	61.7	12.2	69.9	14.3	74.1	15.4
	30	41.1	8.72	45.3	9.55	49.4	10.5	53.5	11.5	57.6	12.5	61.7	13.6	69.9	15.9	74.1	17.2
	33	41.1	9.54	45.3	10.5	49.4	11.6	53.5	12.7	57.6	13.9	61.7	15.1	69.9	17.7	74.1	19.1
	35	41.1	10.2	45.3	11.2	49.4	12.4	53.5	13.6	57.6	14.8	61.7	16.2	69.9	19.0	74.1	20.5
	37	41.1	10.8	45.3	12.0	49.4	13.2	53.5	14.5	57.6	15.9	61.7	17.3	69.9	20.4	74.1	22.2
	40	41.1	11.9	45.3	13.2	49.4	14.6	53.5	16.1	57.6	17.6	61.7	19.4	69.9	23.1	74.1	25.2
	43	41.1	13.2	45.3	14.7	49.4	16.3	53.5	18.1	57.6	19.9	61.7	21.9	69.9	26.3	74.1	28.7
48.0 (50%)	10	34.3	6.23	37.7	6.66	41.1	7.08	44.6	7.51	48.0	7.94	51.4	8.37	58.3	9.22	61.7	9.65
	15	34.3	6.23	37.7	6.66	41.1	7.08	44.6	7.51	48.0	7.94	51.4	8.37	58.3	9.22	61.7	9.65
	21	34.3	6.35	37.7	6.79	41.1	7.23	44.6	7.68	48.0	8.12	51.4	8.56	58.3	9.44	61.7	9.88
	23	34.3	6.61	37.7	7.08	41.1	7.55	44.6	8.01	48.0	8.48	51.4	8.94	58.3	9.90	61.7	10.6
	25	34.3	6.88	37.7	7.37	41.1	7.87	44.6	8.36	48.0	8.85	51.4	9.35	58.3	10.6	61.7	11.4
	27	34.3	7.16	37.7	7.68	41.1	8.20	44.6	8.72	48.0	9.24	51.4	9.90	58.3	11.4	61.7	12.2
	30	34.3	7.59	37.7	8.15	41.1	8.72	44.6	9.40	48.0	10.2	51.4	11.0	58.3	12.7	61.7	13.6
	33	34.3	8.05	37.7	8.74	41.1	9.54	44.6	10.4	48.0	11.2	51.4	12.1	58.3	14.0	61.7	15.1
	35	34.3	8.48	37.7	9.31	41.1	10.2	44.6	11.1	48.0	12.0	51.4	13.0	58.3	15.0	61.7	16.2
	37	34.3	9.02	37.7	9.90	41.1	10.8	44.6	11.8	48.0	12.8	51.4	13.9	58.3	16.1	61.7	17.3
	40	34.3	9.88	37.7	10.9	41.1	11.9	44.6	13.0	48.0	14.1	51.4	15.3	58.3	17.9	61.7	19.4
	43	34.3	10.8	37.7	12.0	41.1	13.2	44.6	14.4	48.0	15.8	51.4	17.2	58.3	20.2	61.7	21.9

TC : Total Capacity kW.

PI : Power Input kW (Compressor + Outdoor fan motor).

The data is based on the following conditions. Pipe length : 7.5 m; Height difference : 0 m.

MODEL SELECTION

■ MODELS : AJ∗126L + AJ∗126U + AJ∗A72U

• CAPACITY : 102kW (36HP)

Total rated cooling capacity of indoor unit	Outdoor temperature	Indoor temperature															
		20℃CDB / 15℃CWB		23℃CDB / 16℃CWB		24℃CDB / 17℃CWB		26℃CDB / 18℃CWB		27℃CDB / 19℃CWB		28℃CDB / 20℃CWB		30℃CDB / 22℃CWB		32℃CDB / 23℃CWB	
	(℃DB)	TC	PI	TC	PI	TC	PI	TC	PI	TC	PI	TC	PI	TC	PI	TC	PI
153 (150%)	10	109	16.1	120	17.5	131	18.9	142	21.3	153	24.6	157	25.4	163	25.8	166	26.1
	15	109	16.9	120	19.7	131	22.9	142	26.4	148	28.2	151	28.4	157	28.9	160	29.2
	21	109	21.5	120	25.1	131	29.3	137	31.6	140	31.9	143	32.1	149	32.7	152	33.0
	23	109	23.3	120	27.2	131	31.7	135	32.8	138	33.1	140	33.4	146	33.9	149	34.2
	25	109	25.1	120	29.5	130	33.8	132	34.1	135	34.3	138	34.6	143	35.2	146	35.5
	27	109	27.2	120	31.9	127	35.0	130	35.3	132	35.6	135	35.9	140	36.5	143	36.9
	30	109	30.5	120	36.1	123	37.0	126	37.4	128	37.7	131	38.1	136	38.7	139	39.1
	33	109	34.7	116	38.9	119	39.2	121	39.6	124	39.9	126	40.3	132	40.9	134	41.3
	35	109	38.2	113	40.4	116	40.7	118	41.0	121	41.4	123	41.7	128	42.4	131	42.8
	37	108	41.5	111	41.8	113	42.2	115	42.5	118	42.8	120	43.2	125	43.9	128	44.2
	40	104	43.7	106	44.0	109	44.4	111	44.7	113	45.0	116	45.4	121	46.1	123	46.4
	43	100	45.9	102	46.2	104	46.5	107	46.9	109	47.2	111	47.6	116	48.3	119	48.6
142 (140%)	10	102	15.2	112	16.5	122	17.8	132	19.1	142	21.5	153	24.6	160	25.6	163	25.8
	15	102	15.2	112	17.6	122	20.3	132	23.3	142	26.7	148	28.2	154	28.7	157	28.9
	21	102	19.3	112	22.4	122	25.9	132	29.8	138	31.6	140	31.9	146	32.4	149	32.7
	23	102	20.9	112	24.3	122	28.1	132	32.4	135	32.8	138	33.1	143	33.7	146	34.0
	25	102	22.6	112	26.2	122	30.4	130	33.8	133	34.1	135	34.4	141	34.9	143	35.2
	27	102	24.4	112	28.4	122	32.9	128	35.0	130	35.3	133	35.6	138	36.2	141	36.6
	30	102	27.3	112	31.9	121	36.8	124	37.1	126	37.4	129	37.8	134	38.4	136	38.8
	33	102	30.7	112	36.5	117	39.0	119	39.3	122	39.6	124	40.0	129	40.6	132	41.0
	35	102	33.7	112	40.1	114	40.4	117	40.8	119	41.1	121	41.4	126	42.1	129	42.5
	37	102	36.9	109	41.6	111	41.9	114	42.2	116	42.6	118	42.9	123	43.6	126	43.9
	40	102	42.6	105	43.8	107	44.1	109	44.4	112	44.8	114	45.1	119	45.8	121	46.1
	43	98.6	45.7	100	46.0	103	46.3	105	46.7	107	47.0	110	47.3	114	48.0	117	48.4
132 (130%)	10	94.7	14.2	104	15.4	113	16.7	123	17.9	132	19.1	142	21.3	156	25.3	159	25.5
	15	94.7	14.2	104	15.7	113	18.0	123	20.5	132	23.3	142	26.4	150	28.4	153	28.6
	21	94.7	17.3	104	20.0	113	22.9	123	26.2	132	29.8	138	31.6	143	32.1	146	32.4
	23	94.7	18.7	104	21.6	113	24.8	123	28.4	132	32.4	135	32.8	140	33.4	143	33.6
	25	94.7	20.2	104	23.3	113	26.8	123	30.7	130	33.8	133	34.1	138	34.6	141	34.9
	27	94.7	21.8	104	25.2	113	29.0	123	33.3	128	35.1	130	35.3	135	35.9	138	36.2
	30	94.7	24.4	104	28.2	113	32.6	121	36.8	124	37.1	126	37.4	131	38.1	134	38.4
	33	94.7	27.3	104	31.9	113	37.4	117	39.0	120	39.3	122	39.7	127	40.3	129	40.7
	35	94.7	29.6	104	35.0	112	40.2	114	40.5	117	40.8	119	41.1	124	41.8	126	42.1
	37	94.7	32.4	104	38.4	109	41.6	112	42.0	114	42.3	116	42.6	121	43.3	124	43.6
	40	94.7	37.2	103	43.5	105	43.8	107	44.2	110	44.5	112	44.8	117	45.5	119	45.8
	43	94.7	43.0	99.2	45.7	101	46.1	103	46.4	105	46.7	108	47.1	112	47.7	115	48.1
122 (120%)	10	87.4	13.3	96.2	14.4	104	15.5	113	16.7	122	17.8	131	18.9	148	23.2	155	25.2
	15	87.4	13.3	96.2	14.4	104	15.8	113	18.0	122	20.3	131	22.9	147	28.1	149	28.3
	21	87.4	15.4	96.2	17.7	104	20.2	113	22.9	122	25.9	131	29.3	140	31.8	142	32.1
	23	87.4	16.7	96.2	19.1	104	21.8	113	24.8	122	28.1	131	31.7	137	33.1	140	33.3
	25	87.4	18.0	96.2	20.6	104	23.6	113	26.8	122	30.4	130	33.8	135	34.3	137	34.6
	27	87.4	19.4	96.2	22.3	104	25.5	113	29.0	122	32.9	127	35.0	132	35.6	135	35.8
	30	87.4	21.6	96.2	24.9	104	28.6	113	32.6	121	36.8	123	37.1	128	37.7	131	38.1
	33	87.4	24.2	96.2	27.9	104	32.3	113	37.4	117	39.0	119	39.3	124	40.0	127	40.3
	35	87.4	26.0	96.2	30.4	104	35.4	112	40.2	114	40.5	117	40.8	121	41.4	124	41.8
	37	87.4	28.4	96.2	33.3	104	38.9	109	41.6	112	42.0	114	42.3	119	42.9	121	43.3
	40	87.4	32.5	96.2	38.2	103	43.5	105	43.9	108	44.2	110	44.5	114	45.2	117	45.5
	43	87.4	37.3	96.2	44.2	99.4	45.8	101	46.1	103	46.4	106	46.7	110	47.4	112	47.7
112 (110%)	10	80.1	12.3	88.2	13.4	96.2	14.4	104	15.4	112	16.5	120	17.5	136	19.8	144	22.0
	15	80.1	12.3	88.2	13.4	96.2	14.4	104	15.7	112	17.6	120	19.7	136	24.5	144	27.2
	21	80.1	13.7	88.2	15.6	96.2	17.7	104	20.0	112	22.4	120	25.1	136	31.4	138	31.7
	23	80.1	14.8	88.2	16.9	96.2	19.1	104	21.6	112	24.3	120	27.2	134	32.7	136	32.9
	25	80.1	15.9	88.2	18.2	96.2	20.6	104	23.3	112	26.2	120	29.5	131	33.9	134	34.2
	27	80.1	17.2	88.2	19.6	96.2	22.3	104	25.2	112	28.4	120	31.9	129	35.2	131	35.5
	30	80.1	19.2	88.2	21.9	96.2	24.9	104	28.2	112	31.9	120	36.1	125	37.3	128	37.6
	33	80.1	21.4	88.2	24.5	96.2	27.9	104	31.9	112	36.5	117	38.9	121	39.5	124	39.9
	35	80.1	23.0	88.2	26.4	96.2	30.4	104	35.0	112	40.1	114	40.4	119	41.0	121	41.4
	37	80.1	24.8	88.2	28.8	96.2	33.3	104	38.4	109	41.6	111	41.9	116	42.5	118	42.9
	40	80.1	28.3	88.2	32.9	96.2	38.2	103	43.5	105	43.8	107	44.2	112	44.8	114	45.1
	43	80.1	32.3	88.2	37.8	96.2	44.2	99.4	45.8	101	46.1	103	46.4	107	47.0	110	47.3

TC : Total Capacity kW.

PI : Power Input kW (Compressor + Outdoor fan motor).

The data is based on the following conditions. Pipe length : 7.5 m; Height difference : 0 m.

MODEL SELECTION

■ MODELS : AJ∗126L + AJ∗126U + AJ∗A72U

• CAPACITY : 102kW (36HP)

Total rated cooling capacity of indoor unit	Outdoor temperature	Indoor temperature															
		20℃CDB / 15℃CWB		23℃CDB / 16℃CWB		24℃CDB / 17℃CWB		26℃CDB / 18℃CWB		27℃CDB / 19℃CWB		28℃CDB / 20℃CWB		30℃CDB / 22℃CWB		32℃CDB / 23℃CWB	
	(℃DB)	TC	PI	TC	PI	TC	PI	TC	PI	TC	PI	TC	PI	TC	PI	TC	PI
102 (100%)	10	72.9	11.4	80.1	12.3	87.4	13.3	94.7	14.2	102	15.2	109	16.1	123	18.0	131	18.9
	15	72.9	11.4	80.1	12.3	87.4	13.3	94.7	14.2	102	15.2	109	16.9	123	20.7	131	22.9
	21	72.9	12.1	80.1	13.7	87.4	15.4	94.7	17.3	102	19.3	109	21.5	123	26.5	131	29.3
	23	72.9	13.1	80.1	14.8	87.4	16.7	94.7	18.7	102	20.9	109	23.3	123	28.7	131	31.7
	25	72.9	14.1	80.1	15.9	87.4	18.0	94.7	20.2	102	22.6	109	25.1	123	31.0	130	33.8
	27	72.9	15.1	80.1	17.2	87.4	19.4	94.7	21.8	102	24.4	109	27.2	123	33.6	127	35.0
	30	72.9	16.9	80.1	19.2	87.4	21.6	94.7	24.4	102	27.3	109	30.5	122	36.8	124	37.1
	33	72.9	18.8	80.1	21.4	87.4	24.2	94.7	27.3	102	30.7	109	34.7	118	39.1	120	39.4
	35	72.9	20.2	80.1	23.0	87.4	26.0	94.7	29.6	102	33.7	109	38.2	115	40.6	117	40.9
	37	72.9	21.6	80.1	24.8	87.4	28.4	94.7	32.4	102	36.9	108	41.5	113	42.1	115	42.4
	40	72.9	24.5	80.1	28.3	87.4	32.5	94.7	37.2	102	42.6	104	43.7	109	44.4	111	44.7
	43	72.9	27.8	80.1	32.3	87.4	37.3	94.7	43.0	98.9	45.7	100	46.0	105	46.6	107	46.9
91.8 (90%)	10	65.6	10.5	72.1	11.3	78.7	12.2	85.2	13.0	91.8	13.8	98.4	14.7	111	16.4	118	17.2
	15	65.6	10.5	72.1	11.3	78.7	12.2	85.2	13.0	91.8	13.8	98.4	14.7	111	17.4	118	19.1
	21	65.6	10.7	72.1	12.0	78.7	13.4	85.2	14.9	91.8	16.5	98.4	18.3	111	22.2	118	24.4
	23	65.6	11.5	72.1	12.9	78.7	14.4	85.2	16.1	91.8	17.9	98.4	19.8	111	24.0	118	26.4
	25	65.6	12.4	72.1	13.9	78.7	15.6	85.2	17.3	91.8	19.3	98.4	21.3	111	26.0	118	28.6
	27	65.6	13.3	72.1	14.9	78.7	16.7	85.2	18.7	91.8	20.8	98.4	23.0	111	28.1	118	30.9
	30	65.6	14.8	72.1	16.6	78.7	18.7	85.2	20.9	91.8	23.2	98.4	25.8	111	31.5	118	34.9
	33	65.6	16.4	72.1	18.5	78.7	20.8	85.2	23.3	91.8	26.0	98.4	28.9	111	36.0	116	38.8
	35	65.6	17.6	72.1	19.9	78.7	22.4	85.2	25.1	91.8	28.2	98.4	31.6	111	39.6	114	40.4
	37	65.6	18.9	72.1	21.4	78.7	24.2	85.2	27.3	91.8	30.8	98.4	34.6	109	41.6	111	41.9
	40	65.6	21.1	72.1	24.1	78.7	27.5	85.2	31.2	91.8	35.3	98.4	39.8	105	43.9	107	44.2
	43	65.6	23.9	72.1	27.4	78.7	31.3	85.2	35.7	91.8	40.6	97.9	45.5	101	46.1	103	46.4
81.6 (80%)	10	58.3	9.53	64.1	10.3	69.9	11.0	75.8	11.8	81.6	12.5	87.4	13.3	99.1	14.8	104	15.5
	15	58.3	9.53	64.1	10.3	69.9	11.0	75.8	11.8	81.6	12.5	87.4	13.3	99.1	14.8	104	15.8
	21	58.3	9.76	64.1	10.5	69.9	11.5	75.8	12.7	81.6	14.0	87.4	15.4	99.1	18.5	104	20.2
	23	58.3	10.2	64.1	11.2	69.9	12.4	75.8	13.7	81.6	15.2	87.4	16.7	99.1	20.0	104	21.8
	25	58.3	10.8	64.1	12.0	69.9	13.4	75.8	14.8	81.6	16.3	87.4	18.0	99.1	21.6	104	23.6
	27	58.3	11.6	64.1	12.9	69.9	14.4	75.8	15.9	81.6	17.6	87.4	19.4	99.1	23.3	104	25.5
	30	58.3	12.8	64.1	14.4	69.9	16.0	75.8	17.8	81.6	19.6	87.4	21.6	99.1	26.1	104	28.6
	33	58.3	14.2	64.1	15.9	69.9	17.8	75.8	19.8	81.6	21.9	87.4	24.2	99.1	29.2	104	32.3
	35	58.3	15.2	64.1	17.1	69.9	19.1	75.8	21.3	81.6	23.6	87.4	26.0	99.1	32.0	104	35.4
	37	58.3	16.3	64.1	18.3	69.9	20.5	75.8	22.8	81.6	25.5	87.4	28.4	99.1	35.1	104	38.9
	40	58.3	18.0	64.1	20.5	69.9	23.1	75.8	25.9	81.6	29.1	87.4	32.5	99.1	40.4	103	43.6
	43	58.3	20.3	64.1	23.1	69.9	26.2	75.8	29.5	81.6	33.2	87.4	37.3	98.1	45.6	100	45.9
71.4 (70%)	10	51.0	8.60	56.1	9.25	61.2	9.91	66.3	10.6	71.4	11.2	76.5	11.9	86.7	13.2	91.8	13.8
	15	51.0	8.60	56.1	9.25	61.2	9.91	66.3	10.6	71.4	11.2	76.5	11.9	86.7	13.2	91.8	13.8
	21	51.0	8.79	56.1	9.47	61.2	10.1	66.3	10.8	71.4	11.8	76.5	12.9	86.7	15.3	91.8	16.5
	23	51.0	9.19	56.1	9.90	61.2	10.6	66.3	11.6	71.4	12.7	76.5	13.9	86.7	16.5	91.8	17.9
	25	51.0	9.60	56.1	10.4	61.2	11.4	66.3	12.5	71.4	13.7	76.5	15.0	86.7	17.8	91.8	19.3
	27	51.0	10.0	56.1	11.1	61.2	12.2	66.3	13.5	71.4	14.8	76.5	16.1	86.7	19.1	91.8	20.8
	30	51.0	11.0	56.1	12.3	61.2	13.6	66.3	15.0	71.4	16.4	76.5	18.0	86.7	21.4	91.8	23.2
	33	51.0	12.2	56.1	13.6	61.2	15.1	66.3	16.6	71.4	18.3	76.5	20.0	86.7	23.9	91.8	26.0
	35	51.0	13.0	56.1	14.5	61.2	16.1	66.3	17.8	71.4	19.6	76.5	21.5	86.7	25.7	91.8	28.2
	37	51.0	13.9	56.1	15.6	61.2	17.3	66.3	19.1	71.4	21.1	76.5	23.2	86.7	28.0	91.8	30.8
	40	51.0	15.4	56.1	17.2	61.2	19.2	66.3	21.4	71.4	23.8	76.5	26.3	86.7	32.0	91.8	35.3
	43	51.0	17.2	56.1	19.4	61.2	21.7	66.3	24.3	71.4	27.0	76.5	30.0	86.7	36.7	91.8	40.6
61.2 (60%)	10	43.7	7.66	48.1	8.22	52.5	8.78	56.8	9.35	61.2	9.91	65.6	10.5	74.3	11.6	78.7	12.2
	15	43.7	7.66	48.1	8.22	52.5	8.78	56.8	9.35	61.2	9.91	65.6	10.5	74.3	11.6	78.7	12.2
	21	43.7	7.83	48.1	8.40	52.5	8.98	56.8	9.56	61.2	10.1	65.6	10.7	74.3	12.4	78.7	13.4
	23	43.7	8.17	48.1	8.78	52.5	9.39	56.8	10.0	61.2	10.6	65.6	11.5	74.3	13.4	78.7	14.4
	25	43.7	8.52	48.1	9.17	52.5	9.81	56.8	10.5	61.2	11.4	65.6	12.4	74.3	14.4	78.7	15.6
	27	43.7	8.88	48.1	9.57	52.5	10.3	56.8	11.2	61.2	12.2	65.6	13.3	74.3	15.5	78.7	16.7
	30	43.7	9.45	48.1	10.4	52.5	11.4	56.8	12.5	61.2	13.6	65.6	14.8	74.3	17.3	78.7	18.7
	33	43.7	10.3	48.1	11.4	52.5	12.6	56.8	13.8	61.2	15.1	65.6	16.4	74.3	19.3	78.7	20.8
	35	43.7	11.0	48.1	12.2	52.5	13.5	56.8	14.8	61.2	16.1	65.6	17.6	74.3	20.7	78.7	22.4
	37	43.7	11.8	48.1	13.0	52.5	14.4	56.8	15.8	61.2	17.3	65.6	18.9	74.3	22.2	78.7	24.2
	40	43.7	13.0	48.1	14.4	52.5	15.9	56.8	17.5	61.2	19.2	65.6	21.1	74.3	25.2	78.7	27.5
	43	43.7	14.3	48.1	16.0	52.5	17.8	56.8	19.7	61.2	21.7	65.6	23.9	74.3	28.7	78.7	31.3
51.0 (50%)	10	36.4	6.72	40.1	7.19	43.7	7.66	47.4	8.13	51.0	8.60	54.6	9.07	61.9	10.0	65.6	10.5
	15	36.4	6.72	40.1	7.19	43.7	7.66	47.4	8.13	51.0	8.60	54.6	9.07	61.9	10.0	65.6	10.5
	21	36.4	6.86	40.1	7.34	43.7	7.83	47.4	8.31	51.0	8.79	54.6	9.27	61.9	10.2	65.6	10.7
	23	36.4	7.15	40.1	7.66	43.7	8.17	47.4	8.68	51.0	9.19	54.6	9.70	61.9	10.7	65.6	11.5
	25	36.4	7.44	40.1	7.98	43.7	8.52	47.4	9.06	51.0	9.60	54.6	10.1	61.9	11.5	65.6	12.4
	27	36.4	7.74	40.1	8.31	43.7	8.88	47.4	9.45	51.0	10.0	54.6	10.7	61.9	12.4	65.6	13.3
	30	36.4	8.22	40.1	8.83	43.7	9.45	47.4	10.2	51.0	11.0	54.6	11.9	61.9	13.8	65.6	14.8
	33	36.4	8.72	40.1	9.47	43.7	10.3	47.4	11.3	51.0	12.2	54.6	13.2	61.9	15.3	65.6	16.4
	35	36.4	9.19	40.1	10.1	43.7	11.0	47.4	12.0	51.0	13.0	54.6	14.1	61.9	16.4	65.6	17.6
	37	36.4	9.77	40.1	10.8	43.7	11.8	47.4	12.8	51.0	13.9	54.6	15.1	61.9	17.5	65.6	18.9
	40	36.4	10.7	40.1	11.8	43.7	13.0	47.4	14.1	51.0	15.4	54.6	16.7	61.9	19.5	65.6	21.1
	43	36.4	11.8	40.1	13.0	43.7	14.3	47.4	15.7	51.0	17.2	54.6	18.7	61.9	22.1	65.6	23.9

TC : Total Capacity kW.

PI : Power Input kW (Compressor + Outdoor fan motor).

The data is based on the following conditions. Pipe length : 7.5 m; Height difference : 0 m.

MODEL SELECTION

■ MODELS : AJ∗126L + AJ∗126U + AJ∗A90U

• CAPACITY : 108kW (38HP)

Total rated cooling capacity of indoor unit	Outdoor temperature	Indoor temperature															
		20℃CDB / 15℃CWB		23℃CDB / 16℃CWB		24℃CDB / 17℃CWB		26℃CDB / 18℃CWB		27℃CDB / 19℃CWB		28℃CDB / 20℃CWB		30℃CDB / 22℃CWB		32℃CDB / 23℃CWB	
	(℃DB)	TC	PI	TC	PI	TC	PI	TC	PI	TC	PI	TC	PI	TC	PI	TC	PI
162 (150%)	10	115	16.9	127	18.4	138	19.8	150	22.4	162	25.8	166	26.6	173	27.1	176	27.4
	15	115	17.7	127	20.7	138	24.0	150	27.8	156	29.6	160	29.9	166	30.4	169	30.7
	21	115	22.6	127	26.4	138	30.8	146	33.2	148	33.5	151	33.8	157	34.4	160	34.7
	23	115	24.4	127	28.6	138	33.4	143	34.5	146	34.8	149	35.1	155	35.7	158	36.0
	25	115	26.4	127	31.0	137	35.5	140	35.8	143	36.1	146	36.4	152	37.0	155	37.4
	27	115	28.6	127	33.5	135	36.8	137	37.1	140	37.4	143	37.7	149	38.5	152	38.8
	30	115	32.1	127	38.0	130	39.0	133	39.3	136	39.7	139	40.0	144	40.8	147	41.1
	33	115	36.6	123	40.9	126	41.3	128	41.6	131	42.0	134	42.4	139	43.1	142	43.5
	35	115	40.2	120	42.5	123	42.8	125	43.2	128	43.5	131	43.9	136	44.6	139	45.0
	37	115	43.7	117	44.0	120	44.4	122	44.7	125	45.1	128	45.5	133	46.2	135	46.6
	40	110	46.0	113	46.3	115	46.7	118	47.1	120	47.4	123	47.8	128	48.5	131	48.9
	43	105	48.3	108	48.7	110	49.0	113	49.4	115	49.7	118	50.1	123	50.8	126	51.2
151 (140%)	10	108	15.9	118	17.3	129	18.7	140	20.0	151	22.6	162	25.8	169	26.9	172	27.1
	15	108	15.9	118	18.5	129	21.3	140	24.5	151	28.1	157	29.6	163	30.1	166	30.4
	21	108	20.3	118	23.6	129	27.2	140	31.4	146	33.2	149	33.5	155	34.1	158	34.4
	23	108	21.9	118	25.5	129	29.5	140	34.0	143	34.6	146	34.8	152	35.4	155	35.7
	25	108	23.7	118	27.6	129	32.0	138	35.6	141	35.9	143	36.2	149	36.8	152	37.1
	27	108	25.6	118	29.8	129	34.6	135	36.9	138	37.2	141	37.5	146	38.1	149	38.5
	30	108	28.7	118	33.5	128	38.7	131	39.0	134	39.4	136	39.7	142	40.5	144	40.8
	33	108	32.3	118	38.4	124	41.0	126	41.4	129	41.7	132	42.1	137	42.8	140	43.1
	35	108	35.4	118	42.2	121	42.6	123	42.9	126	43.3	129	43.6	134	44.3	136	44.7
	37	108	38.9	115	43.8	118	44.1	120	44.5	123	44.8	125	45.2	131	45.9	133	46.3
	40	108	44.9	111	46.1	113	46.4	116	46.8	118	47.1	121	47.5	126	48.2	128	48.6
	43	104	48.1	106	48.4	109	48.8	111	49.1	114	49.5	116	49.8	121	50.6	124	50.9
140 (130%)	10	100	14.9	110	16.2	120	17.5	130	18.8	140	20.0	150	22.4	165	26.6	169	26.8
	15	100	14.9	110	16.4	120	18.8	130	21.5	140	24.5	150	27.8	159	29.8	162	30.1
	21	100	18.1	110	20.9	120	24.1	130	27.5	140	31.4	146	33.2	151	33.8	154	34.1
	23	100	19.6	110	22.7	120	26.0	130	29.8	140	34.0	143	34.5	149	35.1	152	35.4
	25	100	21.2	110	24.5	120	28.2	130	32.3	138	35.6	141	35.9	146	36.4	149	36.7
	27	100	22.8	110	26.5	120	30.5	130	35.0	135	36.9	138	37.2	143	37.8	146	38.1
	30	100	25.6	110	29.7	120	34.3	128	38.7	131	39.1	134	39.4	139	40.1	142	40.5
	33	100	28.7	110	33.5	120	39.3	124	41.0	127	41.4	129	41.7	134	42.4	137	42.8
	35	100	31.2	110	36.8	119	42.3	121	42.6	124	43.0	126	43.3	131	44.0	134	44.4
	37	100	34.1	110	40.4	116	43.8	118	44.2	121	44.5	123	44.9	128	45.6	131	45.9
	40	100	39.2	109	45.8	111	46.2	114	46.5	116	46.9	119	47.2	124	47.9	126	48.3
	43	100	45.3	104	48.2	107	48.5	109	48.8	112	49.2	114	49.5	119	50.2	121	50.6
129 (120%)	10	92.6	13.9	101	15.1	111	16.3	120	17.5	129	18.7	138	19.8	157	24.4	164	26.5
	15	92.6	13.9	101	15.1	111	16.6	120	18.8	129	21.3	138	24.0	155	29.5	158	29.8
	21	92.6	16.2	101	18.6	111	21.2	120	24.1	129	27.2	138	30.8	148	33.4	151	33.7
	23	92.6	17.5	101	20.1	111	22.9	120	26.0	129	29.5	138	33.4	145	34.8	148	35.0
	25	92.6	18.9	101	21.7	111	24.8	120	28.2	129	32.0	137	35.5	143	36.1	145	36.4
	27	92.6	20.3	101	23.4	111	26.7	120	30.5	129	34.6	135	36.9	140	37.4	143	37.7
	30	92.6	22.7	101	26.2	111	30.0	120	34.3	128	38.7	131	39.0	136	39.7	139	40.0
	33	92.6	25.4	101	29.3	111	34.0	120	39.3	124	41.0	127	41.4	132	42.1	134	42.4
	35	92.6	27.4	101	32.0	111	37.2	119	42.3	121	42.6	124	42.9	129	43.6	131	44.0
	37	92.6	29.9	101	35.0	111	40.9	116	43.8	118	44.2	121	44.5	126	45.2	128	45.5
	40	92.6	34.2	101	40.3	109	45.8	112	46.2	114	46.5	116	46.9	121	47.5	124	47.9
	43	92.6	39.2	101	46.6	105	48.2	107	48.5	109	48.9	112	49.2	117	49.9	119	50.2
118 (110%)	10	84.9	12.9	93.3	14.0	101	15.1	110	16.2	118	17.3	127	18.4	144	20.7	152	23.1
	15	84.9	12.9	93.3	14.0	101	15.1	110	16.4	118	18.5	127	20.7	144	25.7	152	28.6
	21	84.9	14.4	93.3	16.4	101	18.6	110	20.9	118	23.6	127	26.4	144	33.0	147	33.3
	23	84.9	15.5	93.3	17.7	101	20.1	110	22.7	118	25.5	127	28.6	142	34.4	144	34.7
	25	84.9	16.7	93.3	19.1	101	21.7	110	24.5	118	27.6	127	31.0	139	35.7	142	36.0
	27	84.9	18.0	93.3	20.6	101	23.4	110	26.5	118	29.8	127	33.5	137	37.0	139	37.3
	30	84.9	20.1	93.3	23.0	101	26.2	110	29.7	118	33.5	127	38.0	133	39.3	135	39.6
	33	84.9	22.4	93.3	25.7	101	29.3	110	33.5	118	38.4	123	41.0	128	41.6	131	42.0
	35	84.9	24.1	93.3	27.7	101	32.0	110	36.8	118	42.2	121	42.5	126	43.2	128	43.5
	37	84.9	26.1	93.3	30.3	101	35.0	110	40.4	116	43.8	118	44.1	123	44.8	125	45.1
	40	84.9	29.7	93.3	34.6	101	40.3	109	45.8	111	46.2	114	46.5	118	47.1	121	47.5
	43	84.9	33.9	93.3	39.8	101	46.6	105	48.2	107	48.5	109	48.8	114	49.5	116	49.9

TC : Total Capacity kW.

PI : Power Input kW (Compressor + Outdoor fan motor).

The data is based on the following conditions. Pipe length : 7.5 m; Height difference : 0 m.

MODEL SELECTION

■ MODELS : AJ∗126L + AJ∗126U + AJ∗A90U

• CAPACITY : 108kW (38HP)

Total rated cooling capacity of indoor unit	Outdoor temperature	Indoor temperature															
		20℃CDB / 15℃CWB		23℃CDB / 16℃CWB		24℃CDB / 17℃CWB		26℃CDB / 18℃CWB		27℃CDB / 19℃CWB		28℃CDB / 20℃CWB		30℃CDB / 22℃WB		32℃CDB / 23℃CWB	
	(℃DB)	TC	PI	TC	PI	TC	PI	TC	PI	TC	PI	TC	PI	TC	PI	TC	PI
108 (100%)	10	77.1	11.9	84.9	12.9	92.6	13.9	100	14.9	108	15.9	115	16.9	131	18.9	138	19.8
	15	77.1	11.9	84.9	12.9	92.6	13.9	100	14.9	108	15.9	115	17.7	131	21.7	138	24.0
	21	77.1	12.7	84.9	14.4	92.6	16.2	100	18.1	108	20.3	115	22.6	131	27.8	138	30.8
	23	77.1	13.7	84.9	15.5	92.6	17.5	100	19.6	108	21.9	115	24.4	131	30.1	138	33.4
	25	77.1	14.7	84.9	16.7	92.6	18.9	100	21.2	108	23.7	115	26.4	131	32.6	137	35.5
	27	77.1	15.9	84.9	18.0	92.6	20.3	100	22.8	108	25.6	115	28.6	131	35.4	135	36.9
	30	77.1	17.7	84.9	20.1	92.6	22.7	100	25.6	108	28.7	115	32.1	129	38.8	131	39.1
	33	77.1	19.7	84.9	22.4	92.6	25.4	100	28.7	108	32.3	115	36.6	125	41.1	127	41.5
	35	77.1	21.2	84.9	24.1	92.6	27.4	100	31.2	108	35.4	115	40.2	122	42.7	124	43.0
	37	77.1	22.7	84.9	26.1	92.6	29.9	100	34.1	108	38.9	115	43.7	119	44.3	122	44.6
	40	77.1	25.7	84.9	29.7	92.6	34.2	100	39.2	108	44.9	111	46.0	115	46.7	117	47.0
	43	77.1	29.3	84.9	33.9	92.6	39.2	100	45.3	104	48.1	106	48.4	111	49.1	113	49.4
97.2 (90%)	10	69.4	10.9	76.4	11.8	83.3	12.7	90.3	13.6	97.2	14.5	104	15.4	118	17.2	124	18.1
	15	69.4	10.9	76.4	11.8	83.3	12.7	90.3	13.6	97.2	14.5	104	15.4	118	18.3	124	20.0
	21	69.4	11.2	76.4	12.5	83.3	14.0	90.3	15.6	97.2	17.3	104	19.2	118	23.3	124	25.6
	23	69.4	12.0	76.4	13.5	83.3	15.1	90.3	16.9	97.2	18.7	104	20.7	118	25.2	124	27.7
	25	69.4	12.9	76.4	14.6	83.3	16.3	90.3	18.2	97.2	20.2	104	22.4	118	27.3	124	30.0
	27	69.4	13.9	76.4	15.7	83.3	17.6	90.3	19.6	97.2	21.8	104	24.2	118	29.5	124	32.5
	30	69.4	15.5	76.4	17.5	83.3	19.6	90.3	21.9	97.2	24.4	104	27.1	118	33.2	124	36.7
	33	69.4	17.2	76.4	19.4	83.3	21.9	90.3	24.5	97.2	27.3	104	30.4	118	37.9	123	40.9
	35	69.4	18.4	76.4	20.9	83.3	23.5	90.3	26.4	97.2	29.6	104	33.2	118	41.7	120	42.5
	37	69.4	19.8	76.4	22.4	83.3	25.4	90.3	28.7	97.2	32.4	104	36.4	115	43.8	118	44.1
	40	69.4	22.1	76.4	25.3	83.3	28.9	90.3	32.8	97.2	37.1	104	41.9	111	46.2	114	46.5
	43	69.4	25.1	76.4	28.8	83.3	32.9	90.3	37.6	97.2	42.7	103	48.0	107	48.6	110	48.9
86.4 (80%)	10	61.7	9.95	67.9	10.7	74.1	11.5	80.2	12.3	86.4	13.1	92.6	13.9	104	15.5	111	16.3
	15	61.7	9.95	67.9	10.7	74.1	11.5	80.2	12.3	86.4	13.1	92.6	13.9	104	15.5	111	16.6
	21	61.7	10.2	67.9	11.0	74.1	12.0	80.2	13.3	86.4	14.7	92.6	16.2	104	19.4	111	21.2
	23	61.7	10.7	67.9	11.7	74.1	13.0	80.2	14.4	86.4	15.9	92.6	17.5	104	21.0	111	22.9
	25	61.7	11.2	67.9	12.6	74.1	14.0	80.2	15.5	86.4	17.1	92.6	18.9	104	22.7	111	24.8
	27	61.7	12.1	67.9	13.5	74.1	15.1	80.2	16.7	86.4	18.5	92.6	20.3	104	24.5	111	26.7
	30	61.7	13.4	67.9	15.0	74.1	16.8	80.2	18.6	86.4	20.6	92.6	22.7	104	27.4	111	30.0
	33	61.7	14.9	67.9	16.7	74.1	18.7	80.2	20.8	86.4	23.0	92.6	25.4	104	30.8	111	34.0
	35	61.7	15.9	67.9	17.9	74.1	20.0	80.2	22.3	86.4	24.8	92.6	27.4	104	33.7	111	37.2
	37	61.7	17.1	67.9	19.2	74.1	21.5	80.2	24.0	86.4	26.8	92.6	29.9	104	36.9	111	40.9
	40	61.7	18.9	67.9	21.5	74.1	24.2	80.2	27.3	86.4	30.6	92.6	34.2	104	42.5	109	45.9
	43	61.7	21.4	67.9	24.3	74.1	27.5	80.2	31.1	86.4	34.9	92.6	39.2	103	48.0	105	48.3
75.6 (70%)	10	54.0	8.96	59.4	9.65	64.8	10.3	70.2	11.0	75.6	11.7	81.0	12.4	91.8	13.8	97.2	14.5
	15	54.0	8.96	59.4	9.65	64.8	10.3	70.2	11.0	75.6	11.7	81.0	12.4	91.8	13.8	97.2	14.5
	21	54.0	9.16	59.4	9.88	64.8	10.6	70.2	11.3	75.6	12.4	81.0	13.5	91.8	16.0	97.2	17.3
	23	54.0	9.58	59.4	10.3	64.8	11.1	70.2	12.2	75.6	13.3	81.0	14.6	91.8	17.3	97.2	18.7
	25	54.0	10.0	59.4	10.8	64.8	11.9	70.2	13.1	75.6	14.4	81.0	15.7	91.8	18.6	97.2	20.2
	27	54.0	10.5	59.4	11.6	64.8	12.8	70.2	14.1	75.6	15.5	81.0	16.9	91.8	20.1	97.2	21.8
	30	54.0	11.5	59.4	12.8	64.8	14.2	70.2	15.7	75.6	17.2	81.0	18.9	91.8	22.5	97.2	24.4
	33	54.0	12.8	59.4	14.2	64.8	15.8	70.2	17.4	75.6	19.2	81.0	21.0	91.8	25.1	97.2	27.3
	35	54.0	13.6	59.4	15.2	64.8	16.9	70.2	18.7	75.6	20.6	81.0	22.6	91.8	27.0	97.2	29.6
	37	54.0	14.6	59.4	16.3	64.8	18.1	70.2	20.1	75.6	22.1	81.0	24.3	91.8	29.5	97.2	32.4
	40	54.0	16.1	59.4	18.1	64.8	20.2	70.2	22.5	75.6	25.0	81.0	27.7	91.8	33.7	97.2	37.1
	43	54.0	18.0	59.4	20.3	64.8	22.8	70.2	25.5	75.6	28.4	81.0	31.5	91.8	38.7	97.2	42.7
64.8 (60%)	10	46.3	7.97	50.9	8.56	55.5	9.16	60.2	9.75	64.8	10.3	69.4	10.9	78.7	12.1	83.3	12.7
	15	46.3	7.97	50.9	8.56	55.5	9.16	60.2	9.75	64.8	10.3	69.4	10.9	78.7	12.1	83.3	12.7
	21	46.3	8.15	50.9	8.76	55.5	9.37	60.2	9.98	64.8	10.6	69.4	11.2	78.7	13.0	83.3	14.0
	23	46.3	8.51	50.9	9.15	55.5	9.80	60.2	10.5	64.8	11.1	69.4	12.0	78.7	14.0	83.3	15.1
	25	46.3	8.88	50.9	9.56	55.5	10.2	60.2	10.9	64.8	11.9	69.4	12.9	78.7	15.1	83.3	16.3
	27	46.3	9.26	50.9	9.98	55.5	10.7	60.2	11.7	64.8	12.8	69.4	13.9	78.7	16.3	83.3	17.6
	30	46.3	9.86	50.9	10.8	55.5	11.9	60.2	13.0	64.8	14.2	69.4	15.5	78.7	18.2	83.3	19.6
	33	46.3	10.8	50.9	12.0	55.5	13.2	60.2	14.4	64.8	15.8	69.4	17.2	78.7	20.2	83.3	21.9
	35	46.3	11.5	50.9	12.8	55.5	14.1	60.2	15.5	64.8	16.9	69.4	18.4	78.7	21.7	83.3	23.5
	37	46.3	12.3	50.9	13.6	55.5	15.1	60.2	16.6	64.8	18.1	69.4	19.8	78.7	23.4	83.3	25.4
	40	46.3	13.6	50.9	15.1	55.5	16.7	60.2	18.3	64.8	20.2	69.4	22.1	78.7	26.5	83.3	28.9
	43	46.3	15.0	50.9	16.8	55.5	18.7	60.2	20.7	64.8	22.8	69.4	25.1	78.7	30.1	83.3	32.9
54.0 (50%)	10	38.6	6.98	42.4	7.48	46.3	7.97	50.1	8.47	54.0	8.96	57.9	9.45	65.6	10.4	69.4	10.9
	15	38.6	6.98	42.4	7.48	46.3	7.97	50.1	8.47	54.0	8.96	57.9	9.45	65.6	10.4	69.4	10.9
	21	38.6	7.13	42.4	7.64	46.3	8.15	50.1	8.66	54.0	9.16	57.9	9.67	65.6	10.7	69.4	11.2
	23	38.6	7.43	42.4	7.97	46.3	8.51	50.1	9.04	54.0	9.58	57.9	10.1	65.6	11.2	69.4	12.0
	25	38.6	7.74	42.4	8.31	46.3	8.88	50.1	9.45	54.0	10.0	57.9	10.6	65.6	12.1	69.4	12.9
	27	38.6	8.06	42.4	8.66	46.3	9.26	50.1	9.86	54.0	10.5	57.9	11.2	65.6	13.0	69.4	13.9
	30	38.6	8.56	42.4	9.21	46.3	9.86	50.1	10.6	54.0	11.5	57.9	12.5	65.6	14.4	69.4	15.5
	33	38.6	9.08	42.4	9.89	46.3	10.8	50.1	11.8	54.0	12.8	57.9	13.8	65.6	16.0	69.4	17.2
	35	38.6	9.59	42.4	10.5	46.3	11.5	50.1	12.6	54.0	13.6	57.9	14.8	65.6	17.2	69.4	18.4
	37	38.6	10.2	42.4	11.2	46.3	12.3	50.1	13.4	54.0	14.6	57.9	15.8	65.6	18.4	69.4	19.8
	40	38.6	11.2	42.4	12.4	46.3	13.6	50.1	14.8	54.0	16.1	57.9	17.5	65.6	20.5	69.4	22.1
	43	38.6	12.3	42.4	13.6	46.3	15.0	50.1	16.5	54.0	18.0	57.9	19.6	65.6	23.2	69.4	25.1

TC : Total Capacity kW.

PI : Power Input kW (Compressor + Outdoor fan motor).

The data is based on the following conditions. Pipe length : 7.5 m; Height difference : 0 m.

MODEL SELECTION

■ MODELS : AJ*126L + AJ*126U + AJ*126U

• CAPACITY : 120kW (42HP)

Total rated cooling capacity of indoor unit	Outdoor temperature	Indoor temperature															
		20°CDB / 15°CWB		23°CDB / 16°CWB		24°CDB / 17°CWB		26°CDB / 18°CWB		27°CDB / 19°CWB		28°CDB / 20°CWB		30°CDB / 22°CWB		32°CDB / 23°CWB	
	(°CDB)	TC	PI	TC	PI	TC	PI	TC	PI	TC	PI	TC	PI	TC	PI	TC	PI
180 (150%)	10	128	19.0	141	20.6	154	22.3	167	25.2	180	29.1	185	30.0	192	30.6	196	30.9
	15	128	19.9	141	23.2	154	27.0	167	31.3	174	33.4	177	33.7	184	34.3	188	34.6
	21	128	25.4	141	29.8	154	34.7	162	37.5	165	37.8	168	38.1	175	38.8	178	39.1
	23	128	27.5	141	32.3	154	37.6	159	39.0	162	39.3	165	39.6	172	40.3	175	40.7
	25	128	29.8	141	34.9	153	40.1	156	40.4	159	40.8	162	41.1	169	41.8	172	42.2
	27	128	32.2	141	37.8	150	41.6	153	41.9	156	42.3	159	42.6	165	43.4	169	43.8
	30	128	36.2	141	42.9	145	44.0	148	44.4	151	44.8	154	45.2	160	46.1	163	46.5
	33	128	41.3	137	46.2	140	46.7	143	47.1	146	47.5	149	47.9	155	48.7	158	49.1
	35	128	45.4	134	48.0	136	48.4	139	48.8	142	49.2	145	49.6	151	50.5	154	50.9
	37	127	49.4	130	49.8	133	50.2	136	50.6	139	51.0	142	51.4	148	52.2	151	52.6
	40	122	52.0	125	52.4	128	52.8	131	53.2	134	53.6	136	54.0	142	54.9	145	55.3
	43	117	54.6	120	55.0	123	55.4	125	55.8	128	56.3	131	56.7	137	57.5	139	57.9
168 (140%)	10	120	17.8	132	19.4	143	21.0	156	22.5	168	25.4	180	29.1	188	30.3	192	30.6
	15	120	17.8	132	20.7	144	24.0	156	27.6	168	31.6	174	33.4	181	34.0	184	34.3
	21	119	22.8	132	26.5	144	30.7	156	35.4	162	37.5	165	37.8	172	38.5	175	38.8
	23	120	24.7	131	28.7	144	33.3	156	38.4	159	39.0	162	39.3	169	40.0	172	40.3
	25	120	26.7	132	31.1	144	36.1	153	40.2	156	40.5	159	40.8	166	41.5	169	41.8
	27	120	28.8	132	33.6	143	39.1	150	41.6	153	42.0	156	42.3	163	43.1	166	43.5
	30	120	32.4	132	37.9	143	43.7	145	44.1	148	44.5	151	44.9	157	45.7	160	46.1
	33	120	36.5	132	43.4	138	46.3	141	46.7	143	47.1	146	47.5	152	48.4	155	48.8
	35	120	40.0	131	47.7	134	48.1	137	48.5	140	48.9	143	49.3	149	50.1	152	50.5
	37	120	43.9	128	49.5	131	49.9	134	50.3	137	50.7	139	51.1	145	51.9	148	52.3
	40	120	50.8	123	52.1	126	52.5	129	52.9	131	53.3	134	53.7	140	54.5	143	54.9
	43	115	54.4	118	54.8	121	55.2	123	55.6	126	56.0	129	56.4	134	57.2	137	57.6
156 (130%)	10	111	16.7	122	18.2	133	19.6	144	21.1	156	22.5	167	25.2	184	29.9	187	30.2
	15	111	16.7	122	18.4	133	21.2	144	24.2	156	27.6	167	31.3	177	33.6	180	33.9
	21	111	20.4	122	23.6	133	27.1	144	31.0	156	35.4	162	37.5	168	38.1	172	38.4
	23	111	22.0	122	25.5	133	29.3	144	33.6	156	38.4	159	39.0	165	39.6	169	40.0
	25	111	23.8	122	27.6	133	31.8	144	36.4	153	40.2	156	40.5	162	41.1	166	41.5
	27	111	25.7	122	29.8	133	34.4	144	39.5	150	41.7	153	42.0	159	42.7	162	43.0
	30	111	28.8	122	33.5	133	38.7	143	43.7	146	44.1	149	44.5	154	45.3	157	45.7
	33	111	32.3	122	37.9	133	44.4	138	46.4	141	46.8	144	47.2	149	48.0	152	48.4
	35	111	35.2	122	41.5	132	47.8	135	48.2	137	48.6	140	48.9	146	49.7	149	50.1
	37	111	38.5	122	45.7	129	49.5	131	49.9	134	50.3	137	50.7	143	51.5	145	51.9
	40	111	44.3	121	51.8	124	52.2	126	52.6	129	53.0	132	53.4	137	54.2	140	54.6
	43	111	51.2	116	54.5	119	54.9	121	55.3	124	55.6	127	56.0	132	56.8	135	57.2
144 (120%)	10	102	15.6	113	16.9	123	18.3	133	19.6	144	21.0	154	22.3	174	27.4	183	29.8
	15	102	15.6	113	16.9	123	18.6	133	21.2	144	24.0	154	27.0	173	33.3	176	33.6
	21	102	18.1	113	20.8	123	23.8	133	27.1	144	30.7	154	34.7	164	37.7	168	38.0
	23	102	19.6	113	22.5	123	25.8	133	29.3	144	33.3	154	37.6	162	39.2	165	39.6
	25	102	21.2	113	24.4	123	27.9	133	31.8	144	36.1	153	40.1	159	40.7	162	41.1
	27	102	22.9	113	26.3	123	30.1	133	34.4	144	39.1	150	41.6	156	42.3	159	42.6
	30	102	25.6	113	29.5	123	33.9	133	38.7	143	43.7	145	44.1	151	44.9	154	45.2
	33	102	28.6	113	33.1	123	38.3	133	44.4	138	46.4	141	46.8	146	47.5	149	47.9
	35	102	30.9	113	36.1	123	42.1	132	47.8	135	48.2	137	48.5	143	49.3	146	49.7
	37	102	33.7	113	39.6	123	46.3	129	49.6	131	49.9	134	50.3	140	51.1	142	51.5
	40	102	38.6	113	45.5	121	51.8	124	52.2	127	52.6	129	53.0	135	53.8	137	54.2
	43	102	44.3	113	52.7	116	54.5	119	54.9	122	55.3	124	55.7	129	56.5	132	56.8
132 (110%)	10	94.3	14.5	103	15.7	113	16.9	122	18.2	132	19.4	141	20.6	160	23.3	169	25.9
	15	94.3	14.5	103	15.7	113	16.9	122	18.4	132	20.7	141	23.2	160	29.0	169	32.2
	21	94.3	16.1	103	18.4	113	20.8	122	23.6	132	26.5	141	29.8	160	37.2	163	37.6
	23	94.3	17.4	103	19.8	113	22.5	122	25.5	132	28.7	141	32.3	157	38.8	160	39.1
	25	94.3	18.8	103	21.4	113	24.4	122	27.6	132	31.1	141	34.9	155	40.3	158	40.6
	27	94.3	20.2	103	23.1	113	26.3	122	29.8	132	33.6	141	37.8	152	41.8	155	42.1
	30	94.3	22.6	103	25.9	113	29.5	122	33.5	132	37.9	141	42.9	147	44.3	150	44.7
	33	94.3	25.3	103	29.0	113	33.1	122	37.9	132	43.4	137	46.3	143	47.0	145	47.4
	35	94.3	27.2	103	31.3	113	36.1	122	41.5	131	47.7	134	48.1	140	48.8	142	49.2
	37	94.3	29.4	103	34.2	113	39.6	122	45.7	128	49.5	131	49.9	136	50.6	139	51.0
	40	94.3	33.5	103	39.1	113	45.5	121	51.8	124	52.2	126	52.6	131	53.3	134	53.7
	43	94.3	38.3	103	45.0	113	52.7	116	54.5	119	54.9	121	55.3	127	56.0	129	56.4

TC : Total Capacity kW.

PI : Power Input kW (Compressor + Outdoor fan motor).

The data is based on the following conditions. Pipe length : 7.5 m; Height difference : 0 m.

MODEL SELECTION

■ MODELS : AJ∗126L + AJ∗126U + AJ∗126U

• CAPACITY : 120kW (42HP)

Total rated cooling capacity of indoor unit	Outdoor temperature	Indoor temperature															
		20℃CDB / 15℃CWB		23℃CDB / 16℃CWB		24℃CDB / 17℃CWB		26℃CDB / 18℃CWB		27℃CDB / 19℃CWB		28℃CDB / 20℃CWB		30℃CDB / 22℃CWB		32℃CDB / 23℃CWB	
	(℃DB)	TC	PI	TC	PI	TC	PI	TC	PI	TC	PI	TC	PI	TC	PI	TC	PI
120 (100%)	10	85.7	13.4	94.3	14.5	102	15.6	111	16.7	120	17.8	128	19.0	145	21.2	154	22.3
	15	85.7	13.4	94.3	14.5	102	15.6	111	16.7	120	17.8	128	19.9	145	24.4	154	27.0
	21	85.7	14.2	94.3	16.1	102	18.1	111	20.4	120	22.8	128	25.4	145	31.3	154	34.7
	23	85.7	15.3	94.3	17.4	102	19.6	111	22.0	120	24.7	128	27.5	145	34.0	154	37.6
	25	85.7	16.5	94.3	18.8	102	21.2	111	23.8	120	26.7	128	29.8	145	36.8	153	40.1
	27	85.7	17.8	94.3	20.2	102	22.9	111	25.7	120	28.8	128	32.2	145	39.9	150	41.6
	30	85.7	19.9	94.3	22.6	102	25.6	111	28.8	120	32.4	128	36.2	143	43.8	146	44.1
	33	85.7	22.2	94.3	25.3	102	28.6	111	32.3	120	36.5	128	41.3	139	46.5	141	46.9
	35	85.7	23.8	94.3	27.2	102	30.9	111	35.2	120	40.0	128	45.4	136	48.3	138	48.7
	37	85.7	25.6	94.3	29.4	102	33.7	111	38.5	120	43.9	127	49.4	133	50.1	135	50.5
	40	85.7	29.0	94.3	33.5	102	38.6	111	44.3	120	50.8	123	52.1	128	52.8	130	53.2
	43	85.7	33.0	94.3	38.3	102	44.3	111	51.2	116	54.4	118	54.8	123	55.5	126	55.9
108 (90%)	10	77.1	12.2	84.9	13.2	92.6	14.2	100	15.3	108	16.3	115	17.3	131	19.3	138	20.3
	15	77.1	12.2	84.9	13.2	92.6	14.2	100	15.3	108	16.3	115	17.3	131	20.5	138	22.5
	21	77.1	12.5	84.9	14.0	92.6	15.7	100	17.5	108	19.5	115	21.6	131	26.2	138	28.8
	23	77.1	13.4	84.9	15.1	92.6	17.0	100	18.9	108	21.0	115	23.3	131	28.4	138	31.3
	25	77.1	14.5	84.9	16.3	92.6	18.3	100	20.4	108	22.7	115	25.2	131	30.8	138	33.9
	27	77.1	15.6	84.9	17.6	92.6	19.7	100	22.0	108	24.5	115	27.2	131	33.3	138	36.7
	30	77.1	17.3	84.9	19.6	92.6	22.0	100	24.7	108	27.5	115	30.6	131	37.4	138	41.4
	33	77.1	19.3	84.9	21.9	92.6	24.6	100	27.6	108	30.8	115	34.3	131	42.8	137	46.2
	35	77.1	20.7	84.9	23.5	92.6	26.5	100	29.7	108	33.4	115	37.5	131	47.1	134	48.0
	37	77.1	22.3	84.9	25.3	92.6	28.6	100	32.4	108	36.5	115	41.1	128	49.5	131	49.8
	40	77.1	24.9	84.9	28.6	92.6	32.6	100	37.0	108	41.9	115	47.4	124	52.2	126	52.6
	43	77.1	28.3	84.9	32.5	92.6	37.2	100	42.5	108	48.4	115	54.2	119	54.9	122	55.3
96.0 (80%)	10	68.6	11.1	75.4	12.0	82.3	12.9	89.1	13.8	96.0	14.7	102	15.6	116	17.4	123	18.3
	15	68.6	11.1	75.4	12.0	82.3	12.9	89.1	13.8	96.0	14.7	102	15.6	116	17.4	123	18.6
	21	68.6	11.4	75.4	12.3	82.3	13.5	89.1	14.9	96.0	16.5	102	18.1	116	21.8	123	23.8
	23	68.6	11.9	75.4	13.1	82.3	14.5	89.1	16.1	96.0	17.8	102	19.6	116	23.6	123	25.8
	25	68.6	12.6	75.4	14.1	82.3	15.7	89.1	17.4	96.0	19.2	102	21.2	116	25.5	123	27.9
	27	68.6	13.5	75.4	15.1	82.3	16.9	89.1	18.7	96.0	20.7	102	22.9	116	27.5	123	30.1
	30	68.6	15.0	75.4	16.9	82.3	18.8	89.1	20.9	96.0	23.2	102	25.6	116	30.9	123	33.9
	33	68.6	16.7	75.4	18.8	82.3	21.0	89.1	23.4	96.0	25.9	102	28.6	116	34.7	123	38.3
	35	68.6	17.9	75.4	20.1	82.3	22.5	89.1	25.1	96.0	27.9	102	30.9	116	38.0	123	42.1
	37	68.6	19.2	75.4	21.6	82.3	24.2	89.1	27.0	96.0	30.2	102	33.7	116	41.7	123	46.3
	40	68.6	21.3	75.4	24.2	82.3	27.3	89.1	30.7	96.0	34.5	102	38.6	116	48.1	121	51.9
	43	68.6	24.0	75.4	27.4	82.3	31.1	89.1	35.1	96.0	39.5	102	44.3	115	54.3	117	54.6
84.0 (70%)	10	60.0	10.0	66.0	10.8	72.0	11.6	78.0	12.3	84.0	13.1	90.0	13.9	102	15.5	108	16.3
	15	60.0	10.0	66.0	10.8	72.0	11.6	78.0	12.3	84.0	13.1	90.0	13.9	102	15.5	108	16.3
	21	60.0	10.2	66.0	11.0	72.0	11.8	78.0	12.6	84.0	13.8	90.0	15.1	102	17.9	108	19.5
	23	60.0	10.7	66.0	11.5	72.0	12.4	78.0	13.6	84.0	14.9	90.0	16.3	102	19.4	108	21.0
	25	60.0	11.2	66.0	12.1	72.0	13.3	78.0	14.7	84.0	16.1	90.0	17.6	102	20.9	108	22.7
	27	60.0	11.7	66.0	12.9	72.0	14.3	78.0	15.8	84.0	17.3	90.0	19.0	102	22.6	108	24.5
	30	60.0	12.9	66.0	14.4	72.0	15.9	78.0	17.6	84.0	19.3	90.0	21.2	102	25.3	108	27.5
	33	60.0	14.3	66.0	15.9	72.0	17.7	78.0	19.6	84.0	21.6	90.0	23.7	102	28.3	108	30.8
	35	60.0	15.3	66.0	17.1	72.0	19.0	78.0	21.0	84.0	23.2	90.0	25.5	102	30.5	108	33.4
	37	60.0	16.4	66.0	18.3	72.0	20.4	78.0	22.6	84.0	24.9	90.0	27.4	102	33.3	108	36.5
	40	60.0	18.1	66.0	20.3	72.0	22.7	78.0	25.3	84.0	28.2	90.0	31.2	102	38.0	108	41.9
	43	60.0	20.2	66.0	22.9	72.0	25.7	78.0	28.7	84.0	32.0	90.0	35.6	102	43.7	108	48.4
72.0 (60%)	10	51.4	8.86	56.6	9.53	61.7	10.2	66.9	10.9	72.0	11.6	77.1	12.2	87.4	13.6	92.6	14.2
	15	51.4	8.86	56.6	9.53	61.7	10.2	66.9	10.9	72.0	11.6	77.1	12.2	87.4	13.6	92.6	14.2
	21	51.4	9.06	56.6	9.75	61.7	10.4	66.9	11.1	72.0	11.8	77.1	12.5	87.4	14.6	92.6	15.7
	23	51.4	9.47	56.6	10.2	61.7	10.9	66.9	11.7	72.0	12.4	77.1	13.4	87.4	15.7	92.6	17.0
	25	51.4	9.89	56.6	10.7	61.7	11.4	66.9	12.2	72.0	13.3	77.1	14.5	87.4	17.0	92.6	18.3
	27	51.4	10.3	56.6	11.1	61.7	12.0	66.9	13.1	72.0	14.3	77.1	15.6	87.4	18.3	92.6	19.7
	30	51.4	11.0	56.6	12.1	61.7	13.3	66.9	14.6	72.0	15.9	77.1	17.3	87.4	20.4	92.6	22.0
	33	51.4	12.1	56.6	13.4	61.7	14.8	66.9	16.2	72.0	17.7	77.1	19.3	87.4	22.8	92.6	24.6
	35	51.4	12.9	56.6	14.3	61.7	15.8	66.9	17.4	72.0	19.0	77.1	20.7	87.4	24.5	92.6	26.5
	37	51.4	13.8	56.6	15.3	61.7	16.9	66.9	18.6	72.0	20.4	77.1	22.3	87.4	26.3	92.6	28.6
	40	51.4	15.2	56.6	16.9	61.7	18.7	66.9	20.6	72.0	22.7	77.1	24.9	87.4	29.9	92.6	32.6
	43	51.4	16.8	56.6	18.8	61.7	21.0	66.9	23.3	72.0	25.7	77.1	28.3	87.4	34.0	92.6	37.2
60.0 (50%)	10	42.9	7.74	47.1	8.30	51.4	8.86	55.7	9.42	60.0	9.98	64.3	10.5	72.9	11.7	77.1	12.2
	15	42.9	7.74	47.1	8.30	51.4	8.86	55.7	9.42	60.0	9.98	64.3	10.5	72.9	11.7	77.1	12.2
	21	42.9	7.90	47.1	8.48	51.4	9.06	55.7	9.64	60.0	10.2	64.3	10.8	72.9	11.9	77.1	12.5
	23	42.9	8.24	47.1	8.85	51.4	9.47	55.7	10.1	60.0	10.7	64.3	11.3	72.9	12.5	77.1	13.4
	25	42.9	8.59	47.1	9.24	51.4	9.89	55.7	10.5	60.0	11.2	64.3	11.8	72.9	13.5	77.1	14.5
	27	42.9	8.96	47.1	9.64	51.4	10.3	55.7	11.0	60.0	11.7	64.3	12.5	72.9	14.5	77.1	15.6
	30	42.9	9.52	47.1	10.3	51.4	11.0	55.7	11.9	60.0	12.9	64.3	13.9	72.9	16.2	77.1	17.3
	33	42.9	10.1	47.1	11.0	51.4	12.1	55.7	13.2	60.0	14.3	64.3	15.5	72.9	18.0	77.1	19.3
	35	42.9	10.7	47.1	11.8	51.4	12.9	55.7	14.1	60.0	15.3	64.3	16.6	72.9	19.3	77.1	20.7
	37	42.9	11.4	47.1	12.6	51.4	13.8	55.7	15.0	60.0	16.4	64.3	17.7	72.9	20.7	77.1	22.3
	40	42.9	12.5	47.1	13.8	51.4	15.2	55.7	16.6	60.0	18.1	64.3	19.7	72.9	23.1	77.1	24.9
	43	42.9	13.8	47.1	15.2	51.4	16.8	55.7	18.5	60.0	20.2	64.3	22.1	72.9	26.1	77.1	28.3

TC : Total Capacity kW.

PI : Power Input kW (Compressor + Outdoor fan motor).

The data is based on the following conditions. Pipe length : 7.5 m; Height difference : 0 m.

MODEL SELECTION

2-4-2. HEATING CAPACITY

■ MODEL : AJ*A72L

• CAPACITY : 22.4kW (8HP)

Total rated heating capacity of indoor unit	Outdoor temperature		Indoor temperature													
			16°CDB		18°CDB		20°CDB		21°CDB		22°CDB		24°CDB		26°CDB	
	(°CDB)	(°CWB)	TC	PI	TC	PI	TC	PI	TC	PI	TC	PI	TC	PI	TC	PI
	-19.3	-20.0	15.0	4.11	14.9	4.38	14.9	4.65	14.8	4.78	14.8	4.91	14.7	5.17	14.7	5.44
	-15.0	-16.0	16.7	4.48	16.6	4.73	16.5	4.99	16.5	5.11	16.5	5.24	16.4	5.49	16.3	5.75
	-12.0	-13.0	18.2	4.73	18.0	4.98	17.9	5.23	17.9	5.35	17.8	5.47	17.7	5.72	17.6	5.97
	-9.0	-10.0	19.7	4.97	19.6	5.21	19.4	5.46	19.4	5.58	19.3	5.70	19.2	5.94	19.0	6.18
	-7.0	-8.0	20.8	5.12	20.6	5.36	20.5	5.60	20.4	5.72	20.3	5.84	20.2	6.08	20.0	6.32
	-5.0	-6.0	21.9	5.27	21.7	5.51	21.6	5.75	21.5	5.87	21.4	5.99	21.2	6.22	21.1	6.46
37.5	-3.0	-4.0	23.0	5.42	22.8	5.66	22.7	5.89	22.6	6.01	22.5	6.13	22.3	6.36	22.1	6.60
	-1.0	-2.0	24.2	5.56	24.0	5.80	23.8	6.03	23.7	6.15	23.6	6.27	23.4	6.50	23.2	6.73
(150%)	0.0	-1.0	24.8	5.63	24.6	5.87	24.4	6.10	24.3	6.22	24.2	6.33	24.0	6.57	23.8	6.80
	2.0	1.0	26.0	5.77	25.8	6.00	25.6	6.24	25.5	6.35	25.4	6.47	25.2	6.70	25.0	6.94
	5.0	4.0	27.9	5.98	27.7	6.21	27.4	6.44	27.3	6.56	27.2	6.68	27.0	6.91	26.7	7.15
	7.0	6.0	29.2	6.11	28.9	6.35	28.7	6.58	28.6	6.70	28.4	6.82	28.2	7.05	27.9	7.29
	9.0	7.8	30.4	6.24	30.1	6.47	29.8	6.71	29.7	6.82	29.6	6.94	29.3	7.18	29.0	7.41
	12.0	10.6	32.2	6.43	31.9	6.67	31.6	6.90	31.5	7.02	31.3	7.14	31.0	7.38	30.0	7.32
	15.0	13.5	34.2	6.63	33.9	6.87	33.6	7.12	33.4	7.24	33.2	7.36	32.5	7.44	30.0	6.84
	-19.3	-20.0	15.0	4.23	14.9	4.49	14.8	4.76	14.8	4.89	14.8	5.02	14.7	5.28	14.6	5.55
	-15.0	-16.0	16.7	4.60	16.6	4.85	16.5	5.11	16.5	5.23	16.4	5.36	16.3	5.61	16.2	5.86
	-12.0	-13.0	18.1	4.86	18.0	5.11	17.9	5.35	17.8	5.48	17.8	5.60	17.7	5.85	17.5	6.09
	-9.0	-10.0	19.6	5.11	19.5	5.35	19.4	5.59	19.3	5.71	19.2	5.83	19.1	6.07	19.0	6.31
	-7.0	-8.0	20.7	5.27	20.5	5.51	20.4	5.74	20.3	5.86	20.2	5.98	20.1	6.22	19.9	6.46
	-5.0	-6.0	21.8	5.42	21.6	5.66	21.5	5.89	21.4	6.01	21.3	6.13	21.1	6.37	21.0	6.60
35.0	-3.0	-4.0	22.9	5.57	22.7	5.81	22.6	6.04	22.5	6.16	22.4	6.28	22.2	6.51	22.0	6.75
	-1.0	-2.0	24.1	5.72	23.9	5.96	23.7	6.19	23.6	6.31	23.5	6.42	23.3	6.66	23.1	6.89
(140%)	0.0	-1.0	24.7	5.80	24.5	6.03	24.3	6.26	24.2	6.38	24.1	6.50	23.9	6.73	23.7	6.96
	2.0	1.0	25.9	5.94	25.7	6.18	25.4	6.41	25.3	6.52	25.2	6.64	25.0	6.87	24.8	7.10
	5.0	4.0	27.7	6.16	27.5	6.39	27.3	6.63	27.1	6.74	27.0	6.86	26.8	7.09	26.5	7.32
	7.0	6.0	29.0	6.31	28.7	6.54	28.5	6.77	28.4	6.89	28.2	7.01	28.0	7.24	27.7	7.47
	9.0	7.8	30.1	6.44	29.9	6.67	29.6	6.91	29.5	7.02	29.3	7.14	29.1	7.37	28.0	7.28
	12.0	10.6	32.0	6.65	31.7	6.88	31.4	7.12	31.2	7.24	31.1	7.35	30.3	7.41	28.0	6.81
	15.0	13.5	33.9	6.87	33.6	7.11	33.2	7.34	33.1	7.46	32.7	7.48	30.3	6.92	28.0	6.36
	-19.3	-20.0	15.0	4.36	14.9	4.62	14.8	4.89	14.8	5.02	14.7	5.15	14.7	5.41	14.6	5.67
	-15.0	-16.0	16.6	4.74	16.5	4.99	16.5	5.24	16.4	5.37	16.4	5.49	16.3	5.75	16.2	6.00
	-12.0	-13.0	18.0	5.01	17.9	5.25	17.8	5.50	17.8	5.62	17.7	5.74	17.6	5.99	17.5	6.23
	-9.0	-10.0	19.5	5.26	19.4	5.50	19.3	5.74	19.2	5.86	19.1	5.98	19.0	6.22	18.9	6.46
	-7.0	-8.0	20.6	5.43	20.4	5.67	20.3	5.90	20.2	6.02	20.1	6.14	20.0	6.38	19.8	6.61
	-5.0	-6.0	21.7	5.59	21.5	5.83	21.3	6.06	21.3	6.18	21.2	6.30	21.0	6.53	20.9	6.76
32.5	-3.0	-4.0	22.8	5.75	22.6	5.98	22.4	6.22	22.3	6.33	22.3	6.45	22.1	6.68	21.9	6.91
	-1.0	-2.0	23.9	5.91	23.7	6.14	23.5	6.37	23.5	6.49	23.4	6.60	23.2	6.83	23.0	7.06
(130%)	0.0	-1.0	24.5	5.99	24.3	6.22	24.1	6.45	24.0	6.56	23.9	6.68	23.7	6.91	23.5	7.14
	2.0	1.0	25.7	6.14	25.5	6.37	25.3	6.60	25.2	6.72	25.1	6.83	24.8	7.06	24.6	7.29
	5.0	4.0	27.5	6.37	27.3	6.60	27.0	6.83	26.9	6.95	26.8	7.06	26.6	7.29	26.0	7.39
	7.0	6.0	28.8	6.53	28.5	6.76	28.2	6.99	28.1	7.10	28.0	7.22	27.7	7.45	26.0	7.04
	9.0	7.8	29.9	6.67	29.6	6.90	29.3	7.13	29.2	7.25	29.1	7.36	28.2	7.32	26.0	6.74
	12.0	10.6	31.7	6.89	31.4	7.13	31.1	7.36	30.9	7.48	30.3	7.41	28.2	6.85	26.0	6.31
	15.0	13.5	33.5	7.13	33.2	7.37	32.5	7.44	31.4	7.18	30.3	6.92	28.2	6.40	26.0	5.90
	-19.3	-20.0	14.9	4.51	14.8	4.77	14.8	5.04	14.7	5.17	14.7	5.30	14.6	5.56	14.5	5.82
	-15.0	-16.0	16.6	4.90	16.5	5.15	16.4	5.40	16.3	5.53	16.3	5.65	16.2	5.90	16.1	6.15
	-12.0	-13.0	18.0	5.18	17.8	5.42	17.7	5.66	17.7	5.79	17.6	5.91	17.5	6.15	17.4	6.40
	-9.0	-10.0	19.4	5.44	19.3	5.68	19.2	5.92	19.1	6.04	19.0	6.16	18.9	6.40	18.8	6.63
	-7.0	-8.0	20.5	5.62	20.3	5.85	20.2	6.09	20.1	6.21	20.0	6.32	19.9	6.56	19.7	6.79
	-5.0	-6.0	21.5	5.79	21.4	6.02	21.2	6.25	21.1	6.37	21.1	6.49	20.9	6.72	20.7	6.95
30.0	-3.0	-4.0	22.6	5.95	22.5	6.18	22.3	6.42	22.2	6.53	22.1	6.65	21.9	6.88	21.7	7.11
	-1.0	-2.0	23.8	6.12	23.6	6.35	23.4	6.58	23.3	6.69	23.2	6.81	23.0	7.04	22.8	7.27
(120%)	0.0	-1.0	24.3	6.20	24.1	6.43	23.9	6.66	23.8	6.77	23.7	6.89	23.5	7.12	23.3	7.35
	2.0	1.0	25.5	6.37	25.3	6.59	25.1	6.82	25.0	6.94	24.8	7.05	24.6	7.28	24.0	7.32
	5.0	4.0	27.3	6.61	27.0	6.84	26.8	7.07	26.7	7.18	26.5	7.30	26.0	7.39	24.0	6.80
	7.0	6.0	28.5	6.78	28.2	7.01	28.0	7.24	27.8	7.35	27.7	7.47	26.0	7.04	24.0	6.49
	9.0	7.8	29.6	6.93	29.3	7.16	29.0	7.39	28.9	7.51	28.0	7.28	26.0	6.74	24.0	6.21
	12.0	10.6	31.3	7.17	31.0	7.40	30.0	7.32	29.0	7.06	28.0	6.81	26.0	6.31	24.0	5.82
	15.0	13.5	33.1	7.43	32.0	7.32	30.0	6.84	29.0	6.60	28.0	6.36	26.0	5.90	24.0	5.44
	-19.3	-20.0	14.9	4.69	14.8	4.95	14.7	5.21	14.7	5.34	14.6	5.47	14.6	5.73	14.5	5.99
	-15.0	-16.0	16.5	5.09	16.4	5.34	16.3	5.59	16.3	5.71	16.2	5.84	16.1	6.09	16.0	6.33
	-12.0	-13.0	17.9	5.37	17.8	5.62	17.6	5.86	17.6	5.98	17.5	6.10	17.4	6.34	17.3	6.59
	-9.0	-10.0	19.3	5.65	19.2	5.89	19.1	6.13	19.0	6.25	18.9	6.36	18.8	6.60	18.7	6.84
	-7.0	-8.0	20.3	5.83	20.2	6.07	20.0	6.30	20.0	6.42	19.9	6.54	19.7	6.77	19.6	7.00
	-5.0	-6.0	21.4	6.01	21.2	6.24	21.1	6.48	21.0	6.59	20.9	6.71	20.7	6.94	20.6	7.17
27.5	-3.0	-4.0	22.5	6.19	22.3	6.42	22.1	6.65	22.0	6.76	21.9	6.88	21.7	7.11	21.6	7.33
	-1.0	-2.0	23.6	6.37	23.4	6.59	23.2	6.82	23.1	6.93	23.0	7.05	22.8	7.28	22.0	7.20
(110%)	0.0	-1.0	24.1	6.45	23.9	6.68	23.7	6.91	23.6	7.02	23.5	7.13	23.3	7.36	22.0	7.03
	2.0	1.0	25.2	6.63	25.0	6.85	24.8	7.08	24.7	7.19	24.6	7.31	23.8	7.26	22.0	6.70
	5.0	4.0	27.0	6.89	26.7	7.12	26.5	7.35	26.4	7.46	25.7	7.29	23.8	6.76	22.0	6.23
	7.0	6.0	28.2	7.07	27.9	7.30	27.5	7.46	26.6	7.20	25.7	6.94	23.8	6.44	22.0	5.94
	9.0	7.8	29.2	7.24	28.9	7.46	27.5	7.14	26.6	6.90	25.7	6.65	23.8	6.17	22.0	5.70
	12.0	10.6	30.9	7.50	29.3	7.15	27.5	6.68	26.6	6.45	25.7	6.23	23.8	5.78	22.0	5.34
	15.0	13.5	31.2	7.12	29.3	6.68	27.5	6.24	26.6	6.03	25.7	5.82	23.8	5.40	22.0	4.99

TC : Total Capacity kW.

PI : Power Input kW (Compressor + Outdoor fan motor).

The data is based on the following conditions. Pipe length : 7.5 m; Height difference : 0 m.

MODEL SELECTION

■ MODEL : AJ*A72L

• CAPACITY : 22.4kW (8HP)

Total rated heating capacity of indoor unit	Outdoor temperature		Indoor temperature													
			16°CDB		18°CDB		20°CDB		21°CDB		22°CDB		24°CDB		26°CDB	
	(°CDB)	(°CWB)	TC	PI	TC	PI	TC	PI	TC	PI	TC	PI	TC	PI	TC	PI
	-19.3	-20.0	14.8	4.90	14.7	5.16	14.7	5.42	14.6	5.55	14.6	5.68	14.5	5.94	14.4	6.20
	-15.0	-16.0	16.4	5.31	16.3	5.56	16.2	5.81	16.2	5.93	16.1	6.06	16.0	6.30	15.9	6.55
	-12.0	-13.0	17.8	5.61	17.7	5.85	17.5	6.09	17.5	6.21	17.4	6.33	17.3	6.57	17.2	6.81
	-9.0	-10.0	19.2	5.90	19.1	6.14	18.9	6.37	18.9	6.49	18.8	6.61	18.7	6.84	18.5	7.07
	-7.0	-8.0	20.2	6.09	20.0	6.32	19.9	6.56	19.8	6.67	19.7	6.79	19.6	7.02	19.4	7.25
	-5.0	-6.0	21.2	6.28	21.0	6.51	20.9	6.74	20.8	6.85	20.7	6.97	20.5	7.20	20.0	7.21
25.0	-3.0	-4.0	22.2	6.47	22.1	6.69	21.9	6.92	21.8	7.03	21.7	7.15	21.5	7.37	20.0	6.87
	-1.0	-2.0	23.3	6.65	23.1	6.88	22.9	7.10	22.8	7.22	22.7	7.33	21.7	7.09	20.0	6.55
(100%)	0.0	-1.0	23.9	6.75	23.7	6.97	23.5	7.20	23.4	7.31	23.3	7.42	21.7	6.92	20.0	6.39
	2.0	1.0	25.0	6.94	24.7	7.16	24.5	7.38	24.2	7.37	23.3	7.11	21.7	6.60	20.0	6.09
	5.0	4.0	26.6	7.22	26.4	7.44	25.0	7.09	24.2	6.85	23.3	6.61	21.7	6.14	20.0	5.67
	7.0	6.0	27.8	7.42	26.7	7.22	25.0	6.76	24.2	6.53	23.3	6.30	21.7	5.85	20.0	5.41
	9.0	7.8	28.3	7.37	26.7	6.92	25.0	6.48	24.2	6.26	23.3	6.04	21.7	5.61	20.0	5.19
	12.0	10.6	28.3	6.89	26.7	6.47	25.0	6.06	24.2	5.86	23.3	5.66	21.7	5.26	20.0	4.86
	15.0	13.5	28.3	6.44	26.7	6.05	25.0	5.67	24.2	5.48	23.3	5.29	21.7	4.92	20.0	4.56
	-19.3	-20.0	14.7	5.16	14.7	5.41	14.6	5.67	14.5	5.80	14.5	5.93	14.4	6.19	14.4	6.44
	-15.0	-16.0	16.3	5.58	16.2	5.83	16.1	6.07	16.1	6.20	16.0	6.32	15.9	6.56	15.8	6.81
	-12.0	-13.0	17.6	5.89	17.5	6.13	17.4	6.37	17.3	6.49	17.3	6.61	17.2	6.85	17.1	7.08
	-9.0	-10.0	19.0	6.20	18.9	6.43	18.8	6.66	18.7	6.78	18.6	6.90	18.5	7.13	18.0	7.15
	-7.0	-8.0	20.0	6.40	19.8	6.63	19.7	6.86	19.6	6.97	19.5	7.09	19.4	7.32	18.0	6.82
	-5.0	-6.0	21.0	6.60	20.8	6.83	20.7	7.05	20.6	7.17	20.5	7.28	19.5	7.03	18.0	6.50
22.5	-3.0	-4.0	22.0	6.80	21.8	7.02	21.6	7.25	21.5	7.36	21.0	7.22	19.5	6.70	18.0	6.20
	-1.0	-2.0	23.0	7.00	22.8	7.22	22.5	7.37	21.7	7.12	21.0	6.87	19.5	6.39	18.0	5.91
(90%)	0.0	-1.0	23.5	7.10	23.3	7.32	22.5	7.19	21.7	6.95	21.0	6.71	19.5	6.24	18.0	5.77
	2.0	1.0	24.6	7.30	24.0	7.32	22.5	6.85	21.7	6.62	21.0	6.39	19.5	5.94	18.0	5.50
	5.0	4.0	25.5	7.24	24.0	6.80	22.5	6.37	21.7	6.16	21.0	5.95	19.5	5.53	18.0	5.12
	7.0	6.0	25.5	6.90	24.0	6.49	22.5	6.08	21.7	5.88	21.0	5.68	19.5	5.28	18.0	4.89
	9.0	7.8	25.5	6.61	24.0	6.21	22.5	5.82	21.7	5.63	21.0	5.44	19.5	5.06	18.0	4.69
	12.0	10.6	25.5	6.18	24.0	5.82	22.5	5.46	21.7	5.28	21.0	5.10	19.5	4.75	18.0	4.40
	15.0	13.5	25.5	5.78	24.0	5.44	22.5	5.10	21.7	4.94	21.0	4.77	19.5	4.45	18.0	4.13
	-19.3	-20.0	14.6	5.47	14.6	5.73	14.5	5.98	14.5	6.11	14.4	6.24	14.3	6.49	14.3	6.74
	-15.0	-16.0	16.2	5.91	16.1	6.16	16.0	6.40	16.0	6.52	15.9	6.64	15.8	6.89	15.7	7.13
	-12.0	-13.0	17.5	6.24	17.4	6.48	17.2	6.71	17.2	6.83	17.1	6.95	17.0	7.18	16.0	6.84
	-9.0	-10.0	18.8	6.56	18.7	6.79	18.5	7.02	18.5	7.14	18.4	7.25	17.3	6.89	16.0	6.38
	-7.0	-8.0	19.7	6.78	19.6	7.00	19.4	7.23	19.3	7.32	18.7	7.07	17.3	6.57	16.0	6.09
	-5.0	-6.0	20.7	6.99	20.5	7.21	20.0	7.21	19.3	6.97	18.7	6.74	17.3	6.27	16.0	5.80
20.0	-3.0	-4.0	21.7	7.20	21.3	7.33	20.0	6.87	19.3	6.65	18.7	6.42	17.3	5.97	16.0	5.53
	-1.0	-2.0	22.7	7.42	21.3	6.98	20.0	6.55	19.3	6.33	18.7	6.12	17.3	5.70	16.0	5.28
(80%)	0.0	-1.0	22.7	7.25	21.3	6.82	20.0	6.39	19.3	6.18	18.7	5.97	17.3	5.56	16.0	5.15
	2.0	1.0	22.7	6.90	21.3	6.50	20.0	6.09	19.3	5.89	18.7	5.70	17.3	5.30	16.0	4.92
	5.0	4.0	22.7	6.42	21.3	6.04	20.0	5.67	19.3	5.49	18.7	5.30	17.3	4.94	16.0	4.59
	7.0	6.0	22.7	6.12	21.3	5.76	20.0	5.41	19.3	5.24	18.7	5.06	17.3	4.72	16.0	4.38
	9.0	7.8	22.7	5.87	21.3	5.53	20.0	5.19	19.3	5.02	18.7	4.86	17.3	4.53	16.0	4.20
	12.0	10.6	22.7	5.50	21.3	5.18	20.0	4.86	19.3	4.71	18.7	4.56	17.3	4.25	16.0	3.95
	15.0	13.5	22.7	5.14	21.3	4.85	20.0	4.56	19.3	4.41	18.7	4.27	17.3	3.99	16.0	3.71
	-19.3	-20.0	14.5	5.87	14.5	6.12	14.4	6.37	14.3	6.50	14.3	6.63	14.2	6.88	14.0	7.02
	-15.0	-16.0	16.0	6.33	15.9	6.57	15.8	6.81	15.8	6.93	15.7	7.05	15.2	6.96	14.0	6.45
	-12.0	-13.0	17.3	6.68	17.1	6.91	17.0	7.14	16.9	7.22	16.3	6.98	15.2	6.50	14.0	6.03
	-9.0	-10.0	18.5	7.02	18.4	7.24	17.5	6.96	16.9	6.73	16.3	6.51	15.2	6.06	14.0	5.62
	-7.0	-8.0	19.4	7.25	18.7	7.07	17.5	6.64	16.9	6.42	16.3	6.21	15.2	5.78	14.0	5.36
	-5.0	-6.0	19.8	7.15	18.7	6.74	17.5	6.33	16.9	6.12	16.3	5.92	15.2	5.52	14.0	5.12
17.5	-3.0	-4.0	19.8	6.82	18.7	6.42	17.5	6.03	16.9	5.84	16.3	5.64	15.2	5.26	14.0	4.88
	-1.0	-2.0	19.8	6.50	18.7	6.12	17.5	5.75	16.9	5.56	16.3	5.38	15.2	5.02	14.0	4.66
(70%)	0.0	-1.0	19.8	6.34	18.7	5.97	17.5	5.61	16.9	5.43	16.3	5.25	15.2	4.90	14.0	4.55
	2.0	1.0	19.8	6.04	18.7	5.70	17.5	5.35	16.9	5.18	16.3	5.01	15.2	4.68	14.0	4.35
	5.0	4.0	19.8	5.63	18.7	5.30	17.5	4.99	16.9	4.83	16.3	4.67	15.2	4.36	14.0	4.06
	7.0	6.0	19.8	5.37	18.7	5.06	17.5	4.76	16.9	4.61	16.3	4.46	15.2	4.17	14.0	3.88
	9.0	7.8	19.8	5.15	18.7	4.86	17.5	4.57	16.9	4.43	16.3	4.29	15.2	4.00	14.0	3.73
	12.0	10.6	19.8	4.83	18.7	4.56	17.5	4.29	16.9	4.16	16.3	4.02	15.2	3.76	14.0	3.51
	15.0	13.5	19.8	4.52	18.7	4.27	17.5	4.02	16.9	3.90	16.3	3.78	15.2	3.54	14.0	3.30
	-19.3	-20.0	14.4	6.39	14.3	6.64	14.2	6.89	14.2	7.01	14.0	7.02	13.0	6.55	12.0	6.08
	-15.0	-16.0	15.8	6.88	15.7	7.11	15.0	6.88	14.5	6.66	14.0	6.45	13.0	6.01	12.0	5.58
	-12.0	-13.0	17.0	7.24	16.0	6.84	15.0	6.43	14.5	6.23	14.0	6.03	13.0	5.62	12.0	5.22
	-9.0	-10.0	17.0	6.77	16.0	6.38	15.0	6.00	14.5	5.81	14.0	5.62	13.0	5.25	12.0	4.87
	-7.0	-8.0	17.0	6.45	16.0	6.09	15.0	5.72	14.5	5.54	14.0	5.36	13.0	5.01	12.0	4.65
	-5.0	-6.0	17.0	6.15	16.0	5.80	15.0	5.46	14.5	5.29	14.0	5.12	13.0	4.78	12.0	4.44
15.0	-3.0	-4.0	17.0	5.86	16.0	5.53	15.0	5.21	14.5	5.04	14.0	4.88	13.0	4.56	12.0	4.24
	-1.0	-2.0	17.0	5.59	16.0	5.28	15.0	4.97	14.5	4.81	14.0	4.66	13.0	4.35	12.0	4.05
(60%)	0.0	-1.0	17.0	5.46	16.0	5.15	15.0	4.85	14.5	4.70	14.0	4.55	13.0	4.25	12.0	3.96
	2.0	1.0	17.0	5.21	16.0	4.92	15.0	4.63	14.5	4.49	14.0	4.35	13.0	4.06	12.0	3.79
	5.0	4.0	17.0	4.85	16.0	4.59	15.0	4.32	14.5	4.19	14.0	4.06	13.0	3.80	12.0	3.54
	7.0	6.0	17.0	4.63	16.0	4.38	15.0	4.13	14.5	4.00	14.0	3.88	13.0	3.63	12.0	3.39
	9.0	7.8	17.0	4.45	16.0	4.20	15.0	3.96	14.5	3.85	14.0	3.73	13.0	3.49	12.0	3.26
	12.0	10.6	17.0	4.18	16.0	3.95	15.0	3.73	14.5	3.62	14.0	3.51	13.0	3.29	12.0	3.07
	15.0	13.5	17.0	3.92	16.0	3.71	15.0	3.50	14.5	3.40	14.0	3.30	13.0	3.10	12.0	2.90
	-19.3	-20.0	14.2	7.09	13.3	6.71	12.5	6.31	12.1	6.12	11.7	5.92	10.8	5.53	10.0	5.14
	-15.0	-16.0	14.2	6.52	13.3	6.16	12.5	5.80	12.1	5.62	11.7	5.44	10.8	5.08	10.0	4.73
	-12.0	-13.0	14.2	6.09	13.3	5.76	12.5	5.42	12.1	5.25	11.7	5.09	10.8	4.76	10.0	4.43
	-9.0	-10.0	14.2	5.68	13.3	5.37	12.5	5.06	12.1	4.90	11.7	4.75	10.8	4.44	10.0	4.14
	-7.0	-8.0	14.2	5.42	13.3	5.13	12.5	4.83	12.1	4.68	11.7	4.54	10.8	4.25	10.0	3.96
	-5.0	-6.0	14.2	5.17	13.3	4.89	12.5	4.61	12.1	4.47	11.7	4.33	10.8	4.06	10.0	3.78
12.5	-3.0	-4.0	14.2	4.94	13.3	4.67	12.5	4.40	12.1	4.27	11.7	4.14	10.8	3.88	10.0	3.62
	-1.0	-2.0	14.2	4.71	13.3	4.46	12.5	4.20	12.1	4.08	11.7	3.95	10.8	3.70	10.0	3.46
(50%)	0.0	-1.0	14.2	4.60	13.3	4.35	12.5	4.11	12.1	3.99	11.7	3.86	10.8	3.62	10.0	3.38
	2.0	1.0	14.2	4.39	13.3	4.16	12.5	3.92	12.1	3.81	11.7	3.69	10.8	3.46	10.0	3.24
	5.0	4.0	14.2	4.10	13.3	3.88	12.5	3.67	12.1	3.56	11.7	3.46	10.8	3.24	10.0	3.03
	7.0	6.0	14.2	3.92	13.3	3.71	12.5	3.51	12.1	3.41	11.7	3.31	10.8	3.11	10.0	2.91
	9.0	7.8	14.2	3.77	13.3	3.57	12.5	3.38	12.1	3.28	11.7	3.18	10.8	2.99	10.0	2.80
	12.0	10.6	14.2	3.54	13.3	3.36	12.5	3.18	12.1	3.09	11.7	3.00	10.8	2.82	10.0	2.65
	15.0	13.5	14.2	3.33	13.3	3.16	12.5	3.00	12.1	2.91	11.7	2.83	10.8	2.66	10.0	2.50

TC : Total Capacity kW.

PI : Power Input kW (Compressor + Outdoor fan motor).

The data is based on the following conditions. Pipe length : 7.5 m; Height difference : 0 m.

MODEL SELECTION

■ MODEL : AJ*A90L

• CAPACITY : 28.0kW (10HP)

Total rated heating capacity of indoor unit	Outdoor temperature		Indoor temperature													
			16°CDB		18°CDB		20°CDB		21°CDB		22°CDB		24°CDB		26°CDB	
	(°CDB)	(°CWB)	TC	PI	TC	PI	TC	PI	TC	PI	TC	PI	TC	PI	TC	PI
	-19.3	-20.0	18.9	5.10	18.8	5.45	18.8	5.79	18.7	5.96	18.7	6.13	18.6	6.47	18.5	6.81
	-15.0	-16.0	21.1	5.57	21.0	5.90	20.9	6.23	20.8	6.39	20.8	6.56	20.6	6.88	20.5	7.21
	-12.0	-13.0	22.9	5.90	22.7	6.22	22.6	6.54	22.5	6.70	22.5	6.86	22.3	7.18	22.2	7.49
	-9.0	-10.0	24.8	6.21	24.6	6.52	24.5	6.83	24.4	6.99	24.3	7.15	24.2	7.46	24.0	7.77
	-7.0	-8.0	26.1	6.40	26.0	6.71	25.8	7.02	25.7	7.18	25.6	7.33	25.4	7.64	25.3	7.95
	-5.0	-6.0	27.5	6.60	27.3	6.90	27.2	7.21	27.1	7.36	27.0	7.52	26.8	7.82	26.6	8.13
47.3	-3.0	-4.0	29.0	6.78	28.8	7.09	28.6	7.39	28.5	7.54	28.3	7.70	28.1	8.00	27.9	8.30
	-1.0	-2.0	30.5	6.96	30.2	7.27	30.0	7.57	29.9	7.72	29.8	7.87	29.5	8.18	29.3	8.48
(150%)	0.0	-1.0	31.2	7.05	31.0	7.36	30.7	7.66	30.6	7.81	30.5	7.96	30.3	8.26	30.0	8.57
	2.0	1.0	32.8	7.23	32.5	7.53	32.2	7.84	32.1	7.99	32.0	8.14	31.7	8.44	31.4	8.74
	5.0	4.0	35.1	7.50	34.8	7.80	34.5	8.10	34.4	8.25	34.3	8.40	34.0	8.70	33.7	9.01
	7.0	6.0	36.7	7.67	36.4	7.97	36.1	8.28	36.0	8.43	35.8	8.58	35.5	8.88	35.2	9.19
	9.0	7.8	38.2	7.83	37.9	8.13	37.6	8.44	37.4	8.59	37.2	8.74	36.9	9.05	36.5	9.35
	12.0	10.6	40.6	8.08	40.2	8.38	39.8	8.69	39.6	8.84	39.5	9.00	39.1	9.31	37.8	9.24
	15.0	13.5	43.0	8.34	42.6	8.65	42.2	8.96	42.0	9.12	41.8	9.27	41.0	9.40	37.8	8.62
	-19.3	-20.0	18.9	5.25	18.8	5.59	18.7	5.94	18.7	6.11	18.6	6.28	18.6	6.62	18.5	6.96
	-15.0	-16.0	21.0	5.73	20.9	6.06	20.8	6.38	20.8	6.55	20.7	6.71	20.6	7.03	20.5	7.36
	-12.0	-13.0	22.8	6.06	22.7	6.38	22.5	6.70	22.5	6.86	22.4	7.02	22.3	7.34	22.1	7.65
	-9.0	-10.0	24.7	6.38	24.6	6.69	24.4	7.01	24.3	7.16	24.2	7.32	24.1	7.63	23.9	7.94
	-7.0	-8.0	26.0	6.59	25.9	6.90	25.7	7.20	25.6	7.36	25.5	7.51	25.3	7.82	25.2	8.12
	-5.0	-6.0	27.4	6.79	27.2	7.09	27.0	7.40	26.9	7.55	26.8	7.70	26.6	8.01	26.5	8.31
44.1	-3.0	-4.0	28.8	6.98	28.6	7.28	28.4	7.59	28.3	7.74	28.2	7.89	28.0	8.19	27.8	8.49
	-1.0	-2.0	30.3	7.17	30.1	7.47	29.8	7.78	29.7	7.93	29.6	8.08	29.4	8.38	29.1	8.68
(140%)	0.0	-1.0	31.1	7.27	30.8	7.57	30.6	7.87	30.5	8.02	30.3	8.17	30.1	8.47	29.8	8.77
	2.0	1.0	32.6	7.46	32.3	7.76	32.0	8.05	31.9	8.20	31.8	8.35	31.5	8.65	31.3	8.95
	5.0	4.0	34.9	7.74	34.6	8.03	34.3	8.33	34.2	8.48	34.0	8.63	33.7	8.93	33.4	9.23
	7.0	6.0	36.5	7.92	36.2	8.22	35.9	8.52	35.7	8.67	35.5	8.82	35.2	9.12	34.9	9.43
	9.0	7.8	37.9	8.09	37.6	8.39	37.3	8.69	37.1	8.84	36.9	9.00	36.6	9.30	35.3	9.18
	12.0	10.6	40.2	8.36	39.9	8.66	39.5	8.97	39.3	9.12	39.1	9.27	38.2	9.35	35.3	8.58
	15.0	13.5	42.6	8.64	42.2	8.95	41.8	9.26	41.6	9.41	41.2	9.45	38.2	8.72	35.3	8.01
	-19.3	-20.0	18.8	5.42	18.8	5.76	18.7	6.10	18.6	6.27	18.6	6.44	18.5	6.78	18.4	7.12
	-15.0	-16.0	21.0	5.91	20.9	6.23	20.8	6.56	20.7	6.72	20.6	6.89	20.5	7.21	20.4	7.53
	-12.0	-13.0	22.7	6.25	22.6	6.57	22.5	6.89	22.4	7.05	22.3	7.20	22.2	7.52	22.1	7.84
	-9.0	-10.0	24.6	6.58	24.5	6.89	24.3	7.20	24.2	7.36	24.1	7.51	24.0	7.82	23.8	8.13
	-7.0	-8.0	25.9	6.80	25.8	7.10	25.6	7.41	25.5	7.56	25.4	7.72	25.2	8.02	25.0	8.33
	-5.0	-6.0	27.3	7.00	27.1	7.31	26.9	7.61	26.8	7.76	26.7	7.91	26.5	8.22	26.3	8.52
41.0	-3.0	-4.0	28.7	7.21	28.5	7.51	28.3	7.81	28.2	7.96	28.1	8.11	27.8	8.41	27.6	8.71
	-1.0	-2.0	30.1	7.41	29.9	7.71	29.7	8.01	29.6	8.16	29.4	8.31	29.2	8.61	29.0	8.90
(130%)	0.0	-1.0	30.9	7.51	30.6	7.81	30.4	8.11	30.3	8.26	30.1	8.41	29.9	8.70	29.6	9.00
	2.0	1.0	32.3	7.71	32.1	8.01	31.8	8.30	31.7	8.45	31.6	8.60	31.3	8.90	31.0	9.20
	5.0	4.0	34.6	8.01	34.3	8.30	34.1	8.60	33.9	8.75	33.8	8.90	33.5	9.20	32.8	9.31
	7.0	6.0	36.2	8.21	35.9	8.50	35.6	8.80	35.4	8.95	35.3	9.10	34.9	9.40	32.8	8.87
	9.0	7.8	37.6	8.39	37.3	8.69	36.9	8.99	36.8	9.14	36.6	9.29	35.5	9.24	32.8	8.49
	12.0	10.6	39.8	8.67	39.5	8.98	39.1	9.28	38.9	9.43	38.2	9.35	35.5	8.63	32.8	7.94
	15.0	13.5	42.2	8.98	41.8	9.29	41.0	9.40	39.6	9.06	38.2	8.72	35.5	8.06	32.8	7.41
	-19.3	-20.0	18.8	5.62	18.7	5.96	18.6	6.30	18.6	6.46	18.6	6.63	18.5	6.97	18.4	7.31
	-15.0	-16.0	20.9	6.12	20.8	6.44	20.7	6.77	20.6	6.93	20.6	7.09	20.5	7.41	20.3	7.73
	-12.0	-13.0	22.6	6.47	22.5	6.79	22.4	7.10	22.3	7.26	22.2	7.42	22.1	7.73	22.0	8.05
	-9.0	-10.0	24.5	6.81	24.3	7.12	24.2	7.43	24.1	7.59	24.0	7.74	23.9	8.05	23.7	8.35
	-7.0	-8.0	25.8	7.04	25.6	7.34	25.4	7.65	25.4	7.80	25.3	7.95	25.1	8.25	24.9	8.56
	-5.0	-6.0	27.1	7.26	26.9	7.56	26.7	7.86	26.6	8.01	26.5	8.16	26.4	8.46	26.2	8.76
37.8	-3.0	-4.0	28.5	7.47	28.3	7.77	28.1	8.07	28.0	8.22	27.9	8.37	27.7	8.67	27.4	8.96
	-1.0	-2.0	29.9	7.68	29.7	7.98	29.5	8.28	29.3	8.43	29.2	8.57	29.0	8.87	28.8	9.17
(120%)	0.0	-1.0	30.6	7.79	30.4	8.09	30.2	8.38	30.0	8.53	29.9	8.68	29.7	8.97	29.4	9.27
	2.0	1.0	32.1	8.00	31.8	8.30	31.6	8.59	31.4	8.74	31.3	8.89	31.0	9.18	30.2	9.21
	5.0	4.0	34.3	8.32	34.0	8.61	33.8	8.91	33.6	9.06	33.5	9.20	32.8	9.31	30.2	8.56
	7.0	6.0	35.9	8.53	35.5	8.83	35.2	9.12	35.1	9.27	34.9	9.42	32.8	8.87	30.2	8.16
	9.0	7.8	37.2	8.73	36.9	9.02	36.6	9.32	36.4	9.47	35.3	9.18	32.8	8.49	30.2	7.81
	12.0	10.6	39.4	9.04	39.1	9.34	37.8	9.24	36.5	8.91	35.3	8.58	32.8	7.94	30.2	7.30
	15.0	13.5	41.7	9.37	40.3	9.24	37.8	8.62	36.5	8.31	35.3	8.01	32.8	7.41	30.2	6.82
	-19.3	-20.0	18.7	5.85	18.7	6.18	18.6	6.52	18.5	6.69	18.5	6.86	18.4	7.19	18.3	7.53
	-15.0	-16.0	20.8	6.36	20.7	6.68	20.6	7.01	20.5	7.17	20.5	7.33	20.4	7.65	20.3	7.97
	-12.0	-13.0	22.5	6.73	22.4	7.04	22.3	7.36	22.2	7.51	22.1	7.67	22.0	7.98	21.9	8.29
	-9.0	-10.0	24.4	7.09	24.2	7.39	24.0	7.70	24.0	7.85	23.9	8.00	23.7	8.31	23.6	8.61
	-7.0	-8.0	25.6	7.32	25.5	7.62	25.3	7.92	25.2	8.07	25.1	8.23	24.9	8.53	24.7	8.83
	-5.0	-6.0	26.9	7.55	26.8	7.85	26.6	8.15	26.5	8.30	26.4	8.45	26.2	8.74	26.0	9.04
34.7	-3.0	-4.0	28.3	7.78	28.1	8.07	27.9	8.37	27.8	8.52	27.7	8.66	27.4	8.96	27.2	9.26
	-1.0	-2.0	29.7	8.00	29.4	8.30	29.2	8.59	29.1	8.74	29.0	8.88	28.7	9.18	27.7	9.07
(110%)	0.0	-1.0	30.4	8.11	30.1	8.41	29.9	8.70	29.8	8.85	29.7	8.99	29.4	9.29	27.7	8.85
	2.0	1.0	31.8	8.34	31.5	8.63	31.3	8.92	31.1	9.07	31.0	9.22	30.0	9.15	27.7	8.42
	5.0	4.0	34.0	8.68	33.7	8.97	33.4	9.26	33.2	9.41	32.3	9.19	30.0	8.50	27.7	7.83
	7.0	6.0	35.5	8.91	35.1	9.20	34.7	9.41	33.5	9.08	32.3	8.75	30.0	8.10	27.7	7.46
	9.0	7.8	36.8	9.12	36.5	9.41	34.7	9.01	33.5	8.69	32.3	8.37	30.0	7.75	27.7	7.14
	12.0	10.6	38.9	9.46	37.0	9.02	34.7	8.42	33.5	8.12	32.3	7.83	30.0	7.25	27.7	6.68
	15.0	13.5	39.3	8.98	37.0	8.41	34.7	7.86	33.5	7.58	32.3	7.31	30.0	6.77	27.7	6.25

TC : Total Capacity kW.

PI : Power Input kW (Compressor + Outdoor fan motor).

The data is based on the following conditions. Pipe length : 7.5 m; Height difference : 0 m.

MODEL SELECTION

■ MODEL : AJ*A90L

• CAPACITY : 28.0kW (10HP)

Total rated heating capacity of indoor unit	Outdoor temperature		Indoor temperature													
			16°CDB		18°CDB		20°CDB		21°CDB		22°CDB		24°CDB		26°CDB	
	(°CDB)	(°CWB)	TC	PI	TC	PI	TC	PI	TC	PI	TC	PI	TC	PI	TC	PI
	-19.3	-20.0	18.7	6.12	18.6	6.46	18.5	6.79	18.5	6.96	18.4	7.13	18.3	7.46	18.3	7.79
	-15.0	-16.0	20.7	6.65	20.6	6.97	20.5	7.29	20.4	7.45	20.4	7.61	20.3	7.93	20.2	8.25
	-12.0	-13.0	22.4	7.03	22.3	7.35	22.1	7.66	22.1	7.81	22.0	7.97	21.9	8.28	21.7	8.59
	-9.0	-10.0	24.2	7.41	24.0	7.71	23.9	8.02	23.8	8.17	23.7	8.32	23.6	8.62	23.4	8.92
	-7.0	-8.0	25.4	7.65	25.3	7.95	25.1	8.25	25.0	8.40	24.9	8.55	24.7	8.85	24.5	9.15
	-5.0	-6.0	26.7	7.89	26.5	8.19	26.3	8.49	26.2	8.63	26.1	8.78	25.9	9.08	25.2	9.07
31.5	-3.0	-4.0	28.0	8.14	27.8	8.43	27.6	8.72	27.5	8.87	27.4	9.01	27.2	9.31	25.2	8.64
	-1.0	-2.0	29.4	8.38	29.2	8.67	28.9	8.96	28.8	9.10	28.7	9.25	27.3	8.93	25.2	8.23
(100%)	0.0	-1.0	30.1	8.50	29.8	8.79	29.6	9.08	29.5	9.22	29.3	9.37	27.3	8.71	25.2	8.03
	2.0	1.0	31.4	8.74	31.2	9.03	30.9	9.32	30.4	9.28	29.4	8.95	27.3	8.29	25.2	7.65
	5.0	4.0	33.6	9.10	33.3	9.39	31.5	8.93	30.4	8.62	29.4	8.32	27.3	7.71	25.2	7.11
	7.0	6.0	35.0	9.35	33.6	9.11	31.5	8.51	30.4	8.22	29.4	7.92	27.3	7.34	25.2	6.78
	9.0	7.8	35.7	9.30	33.6	8.72	31.5	8.15	30.4	7.87	29.4	7.59	27.3	7.03	25.2	6.49
	12.0	10.6	35.7	8.69	33.6	8.15	31.5	7.62	30.4	7.36	29.4	7.10	27.3	6.58	25.2	6.08
	15.0	13.5	35.7	8.11	33.6	7.61	31.5	7.11	30.4	6.87	29.4	6.63	27.3	6.15	25.2	5.68
	-19.3	-20.0	18.6	6.45	18.5	6.79	18.4	7.12	18.4	7.28	18.3	7.45	18.3	7.78	18.2	8.11
	-15.0	-16.0	20.6	7.00	20.5	7.32	20.4	7.64	20.3	7.80	20.3	7.95	20.2	8.27	20.0	8.59
	-12.0	-13.0	22.2	7.40	22.1	7.71	22.0	8.02	21.9	8.17	21.8	8.33	21.7	8.63	21.6	8.94
	-9.0	-10.0	24.0	7.79	23.8	8.09	23.7	8.39	23.6	8.54	23.5	8.69	23.4	8.99	22.7	8.99
	-7.0	-8.0	25.2	8.05	25.0	8.35	24.9	8.64	24.8	8.79	24.7	8.94	24.5	9.24	22.7	8.57
	-5.0	-6.0	26.5	8.31	26.3	8.60	26.1	8.89	26.0	9.04	25.9	9.19	24.6	8.84	22.7	8.16
28.4	-3.0	-4.0	27.7	8.57	27.5	8.86	27.3	9.14	27.2	9.29	26.5	9.08	24.6	8.42	22.7	7.77
	-1.0	-2.0	29.0	8.82	28.8	9.11	28.4	9.28	27.4	8.96	26.5	8.64	24.6	8.02	22.7	7.40
(90%)	0.0	-1.0	29.7	8.95	29.4	9.24	28.4	9.05	27.4	8.74	26.5	8.44	24.6	7.83	22.7	7.22
	2.0	1.0	31.0	9.21	30.2	9.21	28.4	8.62	27.4	8.33	26.5	8.03	24.6	7.45	22.7	6.88
	5.0	4.0	32.1	9.12	30.2	8.56	28.4	8.01	27.4	7.74	26.5	7.47	24.6	6.93	22.7	6.40
	7.0	6.0	32.1	8.69	30.2	8.16	28.4	7.63	27.4	7.37	26.5	7.12	24.6	6.61	22.7	6.11
	9.0	7.8	32.1	8.32	30.2	7.81	28.4	7.31	27.4	7.06	26.5	6.82	24.6	6.33	22.7	5.85
	12.0	10.6	32.1	7.78	30.2	7.30	28.4	6.84	27.4	6.61	26.5	6.38	24.6	5.93	22.7	5.48
	15.0	13.5	32.1	7.26	30.2	6.82	28.4	6.39	27.4	6.17	26.5	5.96	24.6	5.54	22.7	5.13
	-19.3	-20.0	18.5	6.86	18.4	7.19	18.3	7.52	18.3	7.69	18.2	7.85	18.1	8.18	18.1	8.51
	-15.0	-16.0	20.5	7.43	20.3	7.75	20.2	8.06	20.2	8.22	20.1	8.38	20.0	8.69	19.9	9.00
	-12.0	-13.0	22.1	7.85	21.9	8.16	21.8	8.46	21.7	8.61	21.6	8.77	21.5	9.07	20.2	8.58
	-9.0	-10.0	23.7	8.27	23.6	8.56	23.4	8.86	23.3	9.01	23.3	9.16	21.8	8.65	20.2	8.00
	-7.0	-8.0	24.9	8.54	24.7	8.83	24.6	9.12	24.4	9.20	23.5	8.88	21.8	8.25	20.2	7.62
	-5.0	-6.0	26.1	8.81	25.9	9.10	25.2	9.07	24.4	8.77	23.5	8.46	21.8	7.86	20.2	7.26
25.2	-3.0	-4.0	27.3	9.09	26.9	9.23	25.2	8.64	24.4	8.35	23.5	8.06	21.8	7.49	20.2	6.92
	-1.0	-2.0	28.6	9.35	26.9	8.78	25.2	8.23	24.4	7.95	23.5	7.68	21.8	7.13	20.2	6.59
(80%)	0.0	-1.0	28.6	9.12	26.9	8.57	25.2	8.03	24.4	7.76	23.5	7.49	21.8	6.96	20.2	6.44
	2.0	1.0	28.6	8.69	26.9	8.16	25.2	7.65	24.4	7.39	23.5	7.14	21.8	6.63	20.2	6.13
	5.0	4.0	28.6	8.07	26.9	7.59	25.2	7.11	24.4	6.87	23.5	6.64	21.8	6.17	20.2	5.71
	7.0	6.0	28.6	7.69	26.9	7.23	25.2	6.78	24.4	6.55	23.5	6.33	21.8	5.88	20.2	5.45
	9.0	7.8	28.6	7.36	26.9	6.92	25.2	6.49	24.4	6.28	23.5	6.06	21.8	5.64	20.2	5.22
	12.0	10.6	28.6	6.89	26.9	6.48	25.2	6.08	24.4	5.88	23.5	5.68	21.8	5.29	20.2	4.90
	15.0	13.5	28.6	6.44	26.9	6.06	25.2	5.68	24.4	5.50	23.5	5.31	21.8	4.95	20.2	4.59
	-19.3	-20.0	18.4	7.38	18.3	7.70	18.2	8.03	18.1	8.19	18.1	8.36	18.0	8.68	17.6	8.80
	-15.0	-16.0	20.3	7.97	20.1	8.29	20.0	8.60	20.0	8.75	19.9	8.91	19.1	8.72	17.6	8.07
	-12.0	-13.0	21.8	8.42	21.7	8.72	21.5	9.02	21.3	9.07	20.6	8.76	19.1	8.14	17.6	7.54
	-9.0	-10.0	23.4	8.86	23.3	9.15	22.1	8.74	21.3	8.45	20.6	8.16	19.1	7.59	17.6	7.02
	-7.0	-8.0	24.5	9.15	23.5	8.88	22.1	8.33	21.3	8.05	20.6	7.78	19.1	7.24	17.6	6.70
	-5.0	-6.0	25.0	8.99	23.5	8.46	22.1	7.93	21.3	7.67	20.6	7.41	19.1	6.90	17.6	6.38
22.1	-3.0	-4.0	25.0	8.57	23.5	8.06	22.1	7.56	21.3	7.31	20.6	7.06	19.1	6.57	17.6	6.08
	-1.0	-2.0	25.0	8.16	23.5	7.68	22.1	7.20	21.3	6.96	20.6	6.73	19.1	6.26	17.6	5.80
(70%)	0.0	-1.0	25.0	7.96	23.5	7.49	22.1	7.03	21.3	6.80	20.6	6.57	19.1	6.11	17.6	5.66
	2.0	1.0	25.0	7.58	23.5	7.14	22.1	6.69	21.3	6.48	20.6	6.26	19.1	5.83	17.6	5.40
	5.0	4.0	25.0	7.05	23.5	6.64	22.1	6.23	21.3	6.03	20.6	5.83	19.1	5.43	17.6	5.03
	7.0	6.0	25.0	6.72	23.5	6.33	22.1	5.94	21.3	5.75	20.6	5.56	19.1	5.18	17.6	4.80
	9.0	7.8	25.0	6.44	23.5	6.06	22.1	5.69	21.3	5.51	20.6	5.33	19.1	4.97	17.6	4.61
	12.0	10.6	25.0	6.03	23.5	5.68	22.1	5.34	21.3	5.16	20.6	5.00	19.1	4.66	17.6	4.33
	15.0	13.5	25.0	5.64	23.5	5.31	22.1	4.99	21.3	4.84	20.6	4.68	19.1	4.37	17.6	4.06
	-19.3	-20.0	18.2	8.05	18.1	8.37	18.0	8.70	18.0	8.86	17.6	8.80	16.4	8.19	15.1	7.59
	-15.0	-16.0	20.0	8.68	19.9	8.98	18.9	8.63	18.3	8.35	17.6	8.07	16.4	7.51	15.1	6.96
	-12.0	-13.0	21.4	9.11	20.2	8.58	18.9	8.06	18.3	7.80	17.6	7.54	16.4	7.02	15.1	6.50
	-9.0	-10.0	21.4	8.49	20.2	8.00	18.9	7.51	18.3	7.27	17.6	7.02	16.4	6.54	15.1	6.07
	-7.0	-8.0	21.4	8.09	20.2	7.62	18.9	7.16	18.3	6.93	17.6	6.70	16.4	6.24	15.1	5.79
	-5.0	-6.0	21.4	7.71	20.2	7.26	18.9	6.82	18.3	6.60	17.6	6.38	16.4	5.95	15.1	5.52
18.9	-3.0	-4.0	21.4	7.34	20.2	6.92	18.9	6.50	18.3	6.29	17.6	6.08	16.4	5.67	15.1	5.26
	-1.0	-2.0	21.4	7.00	20.2	6.59	18.9	6.19	18.3	6.00	17.6	5.80	16.4	5.41	15.1	5.02
(60%)	0.0	-1.0	21.4	6.83	20.2	6.44	18.9	6.05	18.3	5.85	17.6	5.66	16.4	5.28	15.1	4.90
	2.0	1.0	21.4	6.51	20.2	6.13	18.9	5.77	18.3	5.58	17.6	5.40	16.4	5.04	15.1	4.68
	5.0	4.0	21.4	6.06	20.2	5.71	18.9	5.37	18.3	5.20	17.6	5.03	16.4	4.70	15.1	4.37
	7.0	6.0	21.4	5.78	20.2	5.45	18.9	5.12	18.3	4.96	17.6	4.80	16.4	4.49	15.1	4.17
	9.0	7.8	21.4	5.54	20.2	5.22	18.9	4.92	18.3	4.76	17.6	4.61	16.4	4.31	15.1	4.01
	12.0	10.6	21.4	5.19	20.2	4.90	18.9	4.61	18.3	4.47	17.6	4.33	16.4	4.05	15.1	3.77
	15.0	13.5	21.4	4.86	20.2	4.59	18.9	4.32	18.3	4.19	17.6	4.06	16.4	3.80	15.1	3.54
	-19.3	-20.0	17.8	8.90	16.8	8.39	15.8	7.89	15.2	7.64	14.7	7.39	13.6	6.89	12.6	6.40
	-15.0	-16.0	17.8	8.16	16.8	7.70	15.8	7.24	15.2	7.01	14.7	6.78	13.6	6.32	12.6	5.87
	-12.0	-13.0	17.8	7.62	16.8	7.19	15.8	6.76	15.2	6.55	14.7	6.33	13.6	5.91	12.6	5.49
	-9.0	-10.0	17.8	7.10	16.8	6.70	15.8	6.30	15.2	6.11	14.7	5.91	13.6	5.51	12.6	5.12
	-7.0	-8.0	17.8	6.77	16.8	6.39	15.8	6.01	15.2	5.82	14.7	5.64	13.6	5.26	12.6	4.89
	-5.0	-6.0	17.8	6.46	16.8	6.09	15.8	5.73	15.2	5.55	14.7	5.38	13.6	5.02	12.6	4.67
15.8	-3.0	-4.0	17.8	6.15	16.8	5.81	15.8	5.47	15.2	5.30	14.7	5.13	13.6	4.79	12.6	4.46
	-1.0	-2.0	17.8	5.87	16.8	5.54	15.8	5.21	15.2	5.05	14.7	4.89	13.6	4.57	12.6	4.26
(50%)	0.0	-1.0	17.8	5.73	16.8	5.41	15.8	5.09	15.2	4.94	14.7	4.78	13.6	4.47	12.6	4.16
	2.0	1.0	17.8	5.46	16.8	5.16	15.8	4.86	15.2	4.71	14.7	4.56	13.6	4.27	12.6	3.98
	5.0	4.0	17.8	5.09	16.8	4.81	15.8	4.53	15.2	4.39	14.7	4.26	13.6	3.99	12.6	3.72
	7.0	6.0	17.8	4.86	16.8	4.59	15.8	4.33	15.2	4.20	14.7	4.07	13.6	3.81	12.6	3.56
	9.0	7.8	17.8	4.66	16.8	4.41	15.8	4.16	15.2	4.03	14.7	3.91	13.6	3.66	12.6	3.42
	12.0	10.6	17.8	4.38	16.8	4.14	15.8	3.91	15.2	3.79	14.7	3.68	13.6	3.45	12.6	3.22
	15.0	13.5	17.8	4.10	16.8	3.89	15.8	3.67	15.2	3.56	14.7	3.46	13.6	3.24	12.6	3.03

TC : Total Capacity kW.

PI : Power Input kW (Compressor + Outdoor fan motor).

The data is based on the following conditions. Pipe length : 7.5 m; Height difference : 0 m.

MODEL SELECTION

■ MODEL : AJ*126L

• CAPACITY : 40.0kW (14HP)

Total rated heating capacity of indoor unit	Outdoor temperature		Indoor temperature													
			16°CDB		18°CDB		20°CDB		21°CDB		22°CDB		24°CDB		26°CDB	
	(°CDB)	(°CWB)	TC	PI	TC	PI	TC	PI	TC	PI	TC	PI	TC	PI	TC	PI
	-19.3	-20.0	27.0	7.83	26.9	8.38	26.9	8.93	26.9	9.21	26.8	9.49	26.8	10.0	26.8	10.6
	-15.0	-16.0	30.0	8.57	30.0	9.10	29.9	9.63	29.8	9.89	29.8	10.2	29.7	10.7	29.6	11.2
	-12.0	-13.0	32.6	9.08	32.5	9.60	32.3	10.1	32.3	10.4	32.2	10.6	32.1	11.1	32.0	11.7
	-9.0	-10.0	35.3	9.57	35.1	10.1	35.0	10.6	34.9	10.8	34.8	11.1	34.7	11.6	34.5	12.1
	-7.0	-8.0	37.2	9.88	37.0	10.4	36.8	10.9	36.7	11.1	36.7	11.4	36.5	11.9	36.3	12.4
	-5.0	-6.0	39.1	10.2	39.0	10.7	38.8	11.2	38.6	11.4	38.5	11.7	38.3	12.2	38.1	12.7
67.5	-3.0	-4.0	41.2	10.5	41.0	11.0	40.7	11.5	40.6	11.7	40.5	12.0	40.3	12.4	40.0	12.9
	-1.0	-2.0	43.3	10.8	43.0	11.3	42.8	11.7	42.6	12.0	42.5	12.2	42.2	12.7	42.0	13.2
(150%)	0.0	-1.0	44.3	10.9	44.1	11.4	43.8	11.9	43.6	12.1	43.5	12.4	43.2	12.9	43.0	13.3
	2.0	1.0	46.5	11.2	46.2	11.7	45.9	12.2	45.7	12.4	45.6	12.6	45.3	13.1	45.0	13.6
	5.0	4.0	49.8	11.6	49.5	12.1	49.1	12.6	49.0	12.8	48.8	13.1	48.4	13.5	48.1	14.0
	7.0	6.0	52.1	11.9	51.7	12.4	51.3	12.8	51.1	13.1	51.0	13.3	50.6	13.8	50.2	14.3
	9.0	7.8	54.1	12.1	53.7	12.6	53.3	13.1	53.1	13.3	52.9	13.6	52.5	14.1	52.1	14.6
	12.0	10.6	57.4	12.5	57.0	13.0	56.5	13.5	56.3	13.7	56.1	14.0	55.6	14.5	54.0	14.5
	15.0	13.5	60.9	12.9	60.4	13.4	59.9	13.9	59.7	14.2	59.4	14.4	58.5	14.7	54.0	13.5
	-19.3	-20.0	27.0	8.06	26.9	8.62	26.9	9.17	26.9	9.45	26.8	9.72	26.8	10.3	26.7	10.8
	-15.0	-16.0	30.0	8.82	29.9	9.35	29.8	9.88	29.8	10.1	29.8	10.4	29.7	10.9	29.6	11.5
	-12.0	-13.0	32.5	9.35	32.4	9.86	32.3	10.4	32.2	10.6	32.2	10.9	32.1	11.4	31.9	11.9
	-9.0	-10.0	35.2	9.85	35.1	10.4	34.9	10.9	34.8	11.1	34.8	11.4	34.6	11.9	34.4	12.4
	-7.0	-8.0	37.1	10.2	36.9	10.7	36.7	11.2	36.6	11.4	36.6	11.7	36.4	12.2	36.2	12.7
	-5.0	-6.0	39.0	10.5	38.8	11.0	38.6	11.5	38.5	11.7	38.4	12.0	38.2	12.5	38.0	13.0
63.0	-3.0	-4.0	41.0	10.8	40.8	11.3	40.6	11.8	40.5	12.0	40.3	12.3	40.1	12.8	39.9	13.2
	-1.0	-2.0	43.1	11.1	42.8	11.6	42.6	12.1	42.4	12.3	42.3	12.6	42.1	13.0	41.8	13.5
(140%)	0.0	-1.0	44.1	11.2	43.9	11.7	43.6	12.2	43.5	12.5	43.3	12.7	43.0	13.2	42.8	13.7
	2.0	1.0	46.3	11.5	46.0	12.0	45.7	12.5	45.5	12.8	45.4	13.0	45.1	13.5	44.7	14.0
	5.0	4.0	49.5	12.0	49.2	12.5	48.9	12.9	48.7	13.2	48.5	13.4	48.2	13.9	47.8	14.4
	7.0	6.0	51.8	12.3	51.4	12.8	51.0	13.2	50.8	13.5	50.6	13.7	50.3	14.2	49.9	14.7
	9.0	7.8	53.8	12.5	53.4	13.0	53.0	13.5	52.8	13.8	52.6	14.0	52.2	14.5	50.4	14.3
	12.0	10.6	57.0	12.9	56.6	13.4	56.1	13.9	55.9	14.2	55.7	14.4	54.6	14.6	50.4	13.4
	15.0	13.5	60.4	13.4	59.9	13.9	59.4	14.4	59.2	14.6	58.8	14.8	54.6	13.7	50.4	12.5
	-19.3	-20.0	26.9	8.34	26.9	8.89	26.9	9.44	26.8	9.72	26.8	9.99	26.8	10.5	26.7	11.1
	-15.0	-16.0	30.0	9.11	29.9	9.64	29.8	10.2	29.8	10.4	29.7	10.7	29.6	11.2	29.5	11.7
	-12.0	-13.0	32.4	9.65	32.3	10.2	32.2	10.7	32.2	10.9	32.1	11.2	32.0	11.7	31.9	12.2
	-9.0	-10.0	35.1	10.2	35.0	10.7	34.8	11.2	34.7	11.4	34.7	11.7	34.5	12.2	34.3	12.7
	-7.0	-8.0	37.0	10.5	36.8	11.0	36.6	11.5	36.5	11.8	36.4	12.0	36.3	12.5	36.1	13.0
	-5.0	-6.0	38.9	10.8	38.7	11.3	38.5	11.8	38.4	12.1	38.3	12.3	38.1	12.8	37.9	13.3
58.5	-3.0	-4.0	40.9	11.2	40.6	11.7	40.4	12.1	40.3	12.4	40.2	12.6	39.9	13.1	39.7	13.6
	-1.0	-2.0	42.9	11.5	42.6	12.0	42.4	12.4	42.2	12.7	42.1	12.9	41.8	13.4	41.6	13.9
(130%)	0.0	-1.0	43.9	11.6	43.7	12.1	43.4	12.6	43.2	12.8	43.1	13.1	42.8	13.6	42.5	14.1
	2.0	1.0	46.0	11.9	45.7	12.4	45.4	12.9	45.3	13.2	45.1	13.4	44.8	13.9	44.5	14.4
	5.0	4.0	49.2	12.4	48.9	12.9	48.5	13.4	48.4	13.6	48.2	13.9	47.8	14.3	46.8	14.5
	7.0	6.0	51.4	12.7	51.1	13.2	50.7	13.7	50.5	13.9	50.3	14.2	49.9	14.7	46.8	13.8
	9.0	7.8	53.4	13.0	53.0	13.5	52.6	14.0	52.4	14.2	52.2	14.5	50.7	14.4	46.8	13.2
	12.0	10.6	56.6	13.5	56.1	13.9	55.7	14.4	55.5	14.7	54.6	14.6	50.7	13.5	46.8	12.4
	15.0	13.5	59.9	13.9	59.4	14.4	58.5	14.7	56.6	14.2	54.6	13.7	50.7	12.6	46.8	11.6
	-19.3	-20.0	26.9	8.66	26.9	9.21	26.8	9.76	26.8	10.0	26.8	10.3	26.7	10.9	26.7	11.4
	-15.0	-16.0	29.9	9.45	29.8	9.97	29.7	10.5	29.7	10.8	29.7	11.0	29.6	11.6	29.5	12.1
	-12.0	-13.0	32.4	10.0	32.3	10.5	32.1	11.0	32.1	11.3	32.0	11.5	31.9	12.1	31.8	12.6
	-9.0	-10.0	35.0	10.6	34.8	11.1	34.7	11.6	34.6	11.8	34.5	12.1	34.4	12.6	34.2	13.1
	-7.0	-8.0	36.8	10.9	36.7	11.4	36.5	11.9	36.4	12.1	36.3	12.4	36.1	12.9	35.9	13.4
	-5.0	-6.0	38.7	11.2	38.5	11.7	38.3	12.2	38.2	12.5	38.1	12.7	37.9	13.2	37.7	13.7
54.0	-3.0	-4.0	40.7	11.6	40.4	12.1	40.2	12.6	40.1	12.8	40.0	13.0	39.7	13.5	39.5	14.0
	-1.0	-2.0	42.7	11.9	42.4	12.4	42.1	12.9	42.0	13.1	41.9	13.4	41.6	13.8	41.3	14.3
(120%)	0.0	-1.0	43.7	12.1	43.4	12.6	43.1	13.0	43.0	13.3	42.8	13.5	42.6	14.0	42.3	14.5
	2.0	1.0	45.7	12.4	45.4	12.9	45.1	13.4	45.0	13.6	44.8	13.9	44.5	14.3	43.2	14.3
	5.0	4.0	48.9	12.9	48.5	13.4	48.2	13.9	48.0	14.1	47.8	14.4	46.8	14.5	43.2	13.3
	7.0	6.0	51.0	13.3	50.6	13.7	50.3	14.2	50.1	14.5	49.9	14.7	46.8	13.8	43.2	12.7
	9.0	7.8	53.0	13.6	52.6	14.0	52.2	14.5	52.0	14.8	50.4	14.3	46.8	13.2	43.2	12.2
	12.0	10.6	56.0	14.0	55.6	14.5	54.0	14.5	52.2	13.9	50.4	13.4	46.8	12.4	43.2	11.4
	15.0	13.5	59.3	14.6	57.6	14.5	54.0	13.5	52.2	13.0	50.4	12.5	46.8	11.6	43.2	10.6
	-19.3	-20.0	26.9	9.03	26.8	9.58	26.8	10.1	26.8	10.4	26.8	10.7	26.7	11.2	26.7	11.8
	-15.0	-16.0	29.8	9.84	29.8	10.4	29.7	10.9	29.6	11.2	29.6	11.4	29.5	11.9	29.4	12.5
	-12.0	-13.0	32.3	10.4	32.2	10.9	32.0	11.5	32.0	11.7	31.9	12.0	31.8	12.5	31.7	13.0
	-9.0	-10.0	34.9	11.0	34.7	11.5	34.6	12.0	34.5	12.2	34.4	12.5	34.2	13.0	34.1	13.5
	-7.0	-8.0	36.7	11.4	36.5	11.9	36.3	12.3	36.2	12.6	36.1	12.8	35.9	13.3	35.7	13.8
	-5.0	-6.0	38.5	11.7	38.3	12.2	38.1	12.7	38.0	12.9	37.9	13.2	37.7	13.7	37.5	14.1
49.5	-3.0	-4.0	40.4	12.1	40.2	12.6	40.0	13.0	39.8	13.3	39.7	13.5	39.5	14.0	39.2	14.5
	-1.0	-2.0	42.4	12.4	42.1	12.9	41.9	13.4	41.7	13.6	41.6	13.9	41.3	14.3	39.6	14.0
(110%)	0.0	-1.0	43.4	12.6	43.1	13.1	42.8	13.6	42.7	13.8	42.5	14.0	42.3	14.5	39.6	13.7
	2.0	1.0	45.4	13.0	45.1	13.4	44.8	13.9	44.6	14.2	44.5	14.4	42.9	14.2	39.6	13.0
	5.0	4.0	48.5	13.5	48.1	14.0	47.8	14.5	47.6	14.7	46.2	14.3	42.9	13.2	39.6	12.1
	7.0	6.0	50.5	13.9	50.2	14.3	49.5	14.7	47.8	14.1	46.2	13.6	42.9	12.6	39.6	11.6
	9.0	7.8	52.4	14.2	52.0	14.7	49.5	14.1	47.8	13.5	46.2	13.1	42.9	12.1	39.6	11.1
	12.0	10.6	55.4	14.7	52.8	14.1	49.5	13.2	47.8	12.7	46.2	12.2	42.9	11.3	39.6	10.4
	15.0	13.5	56.1	14.1	52.8	13.2	49.5	12.3	47.8	11.9	46.2	11.4	42.9	10.6	39.6	9.72

TC : Total Capacity kW.

PI : Power Input kW (Compressor + Outdoor fan motor).

The data is based on the following conditions. Pipe length : 7.5 m; Height difference : 0 m.

MODEL SELECTION

■ MODEL : AJ*126L

• CAPACITY : 40.0kW (14HP)

Total rated heating capacity of indoor unit	Outdoor temperature		Indoor temperature													
			16°CDB		18°CDB		20°CDB		21°CDB		22°CDB		24°CDB		26°CDB	
	(°CDB)	(°CWB)	TC	PI	TC	PI	TC	PI	TC	PI	TC	PI	TC	PI	TC	PI
	-19.3	-20.0	26.9	9.48	26.8	10.0	26.8	10.6	26.7	10.8	26.7	11.1	26.7	11.7	26.6	12.2
	-15.0	-16.0	29.8	10.3	29.7	10.8	29.6	11.4	29.6	11.6	29.5	11.9	29.4	12.4	29.3	12.9
	-12.0	-13.0	32.2	10.9	32.0	11.4	31.9	11.9	31.9	12.2	31.8	12.4	31.7	13.0	31.5	13.5
	-9.0	-10.0	34.7	11.5	34.5	12.0	34.4	12.5	34.3	12.8	34.2	13.0	34.1	13.5	33.9	14.0
	-7.0	-8.0	36.5	11.9	36.3	12.4	36.1	12.9	36.0	13.1	35.9	13.4	35.7	13.9	35.5	14.3
	-5.0	-6.0	38.3	12.3	38.1	12.8	37.9	13.3	37.8	13.5	37.7	13.7	37.4	14.2	36.0	14.0
45.0	-3.0	-4.0	40.1	12.7	39.9	13.1	39.7	13.6	39.6	13.9	39.4	14.1	39.0	14.5	36.0	13.3
	-1.0	-2.0	42.1	13.0	41.8	13.5	41.5	14.0	41.4	14.2	41.3	14.5	39.0	13.8	36.0	12.7
(100%)	0.0	-1.0	43.0	13.2	42.7	13.7	42.5	14.2	42.3	14.4	42.0	14.5	39.0	13.5	36.0	12.4
	2.0	1.0	45.0	13.6	44.7	14.1	44.4	14.6	43.5	14.4	42.0	13.9	39.0	12.8	36.0	11.8
	5.0	4.0	48.0	14.2	47.6	14.7	45.0	13.9	43.5	13.4	42.0	12.9	39.0	12.0	36.0	11.0
	7.0	6.0	50.0	14.6	48.0	14.2	45.0	13.2	43.5	12.8	42.0	12.3	39.0	11.4	36.0	10.5
	9.0	7.8	51.0	14.5	48.0	13.6	45.0	12.7	43.5	12.2	42.0	11.8	39.0	10.9	36.0	10.1
	12.0	10.6	51.0	13.6	48.0	12.7	45.0	11.9	43.5	11.5	42.0	11.1	39.0	10.2	36.0	9.43
	15.0	13.5	51.0	12.7	48.0	11.9	45.0	11.1	43.5	10.7	42.0	10.3	39.0	9.57	36.0	8.82
	-19.3	-20.0	26.8	10.0	26.8	10.6	26.7	11.1	26.7	11.4	26.7	11.7	26.6	12.2	26.6	12.7
	-15.0	-16.0	29.7	10.9	29.6	11.4	29.5	11.9	29.5	12.2	29.4	12.5	29.3	13.0	29.2	13.5
	-12.0	-13.0	32.0	11.5	31.9	12.0	31.8	12.5	31.7	12.8	31.7	13.0	31.5	13.5	31.4	14.0
	-9.0	-10.0	34.5	12.2	34.3	12.6	34.2	13.1	34.1	13.4	34.0	13.6	33.9	14.1	32.4	13.8
	-7.0	-8.0	36.2	12.6	36.0	13.0	35.9	13.5	35.8	13.8	35.7	14.0	35.1	14.3	32.4	13.1
	-5.0	-6.0	38.0	13.0	37.8	13.4	37.6	13.9	37.5	14.2	37.4	14.4	35.1	13.6	32.4	12.5
40.5	-3.0	-4.0	39.8	13.4	39.6	13.8	39.3	14.3	39.1	14.5	37.8	14.0	35.1	13.0	32.4	12.0
	-1.0	-2.0	41.6	13.8	41.4	14.2	40.5	14.3	39.1	13.8	37.8	13.4	35.1	12.4	32.4	11.4
(90%)	0.0	-1.0	42.6	14.0	42.3	14.4	40.5	14.0	39.1	13.5	37.8	13.0	35.1	12.1	32.4	11.1
	2.0	1.0	44.5	14.4	43.2	14.3	40.5	13.4	39.1	12.9	37.8	12.4	35.1	11.5	32.4	10.6
	5.0	4.0	45.9	14.2	43.2	13.3	40.5	12.4	39.1	12.0	37.8	11.6	35.1	10.7	32.4	9.89
	7.0	6.0	45.9	13.5	43.2	12.7	40.5	11.9	39.1	11.4	37.8	11.0	35.1	10.2	32.4	9.44
	9.0	7.8	45.9	13.0	43.2	12.2	40.5	11.4	39.1	11.0	37.8	10.6	35.1	9.81	32.4	9.05
	12.0	10.6	45.9	12.1	43.2	11.4	40.5	10.6	39.1	10.3	37.8	9.91	35.1	9.19	32.4	8.48
	15.0	13.5	45.9	11.3	43.2	10.6	40.5	9.94	39.1	9.60	37.8	9.26	35.1	8.60	32.4	7.94
	-19.3	-20.0	26.8	10.7	26.7	11.2	26.7	11.8	26.6	12.1	26.6	12.3	26.5	12.9	26.5	13.4
	-15.0	-16.0	29.6	11.6	29.5	12.1	29.4	12.6	29.3	12.9	29.3	13.2	29.2	13.7	28.8	14.0
	-12.0	-13.0	31.8	12.3	31.7	12.8	31.6	13.3	31.5	13.5	31.5	13.8	31.2	14.2	28.8	13.1
	-9.0	-10.0	34.3	12.9	34.1	13.4	33.9	13.9	33.8	14.1	33.6	14.3	31.2	13.2	28.8	12.2
	-7.0	-8.0	35.9	13.4	35.7	13.8	35.5	14.3	34.8	14.1	33.6	13.6	31.2	12.6	28.8	11.7
	-5.0	-6.0	37.6	13.8	37.4	14.3	36.0	14.0	34.8	13.5	33.6	13.0	31.2	12.1	28.8	11.1
36.0	-3.0	-4.0	39.4	14.2	38.4	14.2	36.0	13.3	34.8	12.9	33.6	12.4	31.2	11.5	28.8	10.6
	-1.0	-2.0	40.8	14.5	38.4	13.6	36.0	12.7	34.8	12.3	33.6	11.8	31.2	11.0	28.8	10.1
(80%)	0.0	-1.0	40.8	14.1	38.4	13.3	36.0	12.4	34.8	12.0	33.6	11.6	31.2	10.7	28.8	9.89
	2.0	1.0	40.8	13.5	38.4	12.6	36.0	11.8	34.8	11.4	33.6	11.0	31.2	10.2	28.8	9.44
	5.0	4.0	40.8	12.5	38.4	11.8	36.0	11.0	34.8	10.6	33.6	10.3	31.2	9.52	28.8	8.80
	7.0	6.0	40.8	11.9	38.4	11.2	36.0	10.5	34.8	10.1	33.6	9.79	31.2	9.09	28.8	8.39
	9.0	7.8	40.8	11.5	38.4	10.8	36.0	10.1	34.8	9.72	33.6	9.38	31.2	8.71	28.8	8.05
	12.0	10.6	40.8	10.7	38.4	10.1	36.0	9.43	34.8	9.11	33.6	8.79	31.2	8.17	28.8	7.55
	15.0	13.5	40.8	10.0	38.4	9.41	36.0	8.82	34.8	8.52	33.6	8.23	31.2	7.65	28.8	7.07
	-19.3	-20.0	26.7	11.6	26.6	12.1	26.6	12.6	26.5	12.9	26.5	13.2	26.5	13.7	25.2	13.3
	-15.0	-16.0	29.4	12.5	29.3	13.0	29.2	13.5	29.2	13.8	29.1	14.0	27.3	13.2	25.2	12.2
	-12.0	-13.0	31.6	13.2	31.5	13.7	31.3	14.2	30.4	13.8	29.4	13.4	27.3	12.4	25.2	11.5
	-9.0	-10.0	33.9	13.9	33.6	14.3	31.5	13.4	30.4	12.9	29.4	12.5	27.3	11.6	25.2	10.7
	-7.0	-8.0	35.5	14.4	33.6	13.6	31.5	12.8	30.4	12.3	29.4	11.9	27.3	11.1	25.2	10.2
	-5.0	-6.0	35.7	13.8	33.6	13.0	31.5	12.2	30.4	11.8	29.4	11.4	27.3	10.6	25.2	9.76
31.5	-3.0	-4.0	35.7	13.2	33.6	12.4	31.5	11.6	30.4	11.2	29.4	10.8	27.3	10.1	25.2	9.31
	-1.0	-2.0	35.7	12.6	33.6	11.8	31.5	11.1	30.4	10.7	29.4	10.3	27.3	9.61	25.2	8.88
(70%)	0.0	-1.0	35.7	12.3	33.6	11.6	31.5	10.8	30.4	10.5	29.4	10.1	27.3	9.38	25.2	8.68
	2.0	1.0	35.7	11.7	33.6	11.0	31.5	10.3	30.4	9.98	29.4	9.63	27.3	8.95	25.2	8.28
	5.0	4.0	35.7	10.9	33.6	10.3	31.5	9.61	30.4	9.30	29.4	8.98	27.3	8.35	25.2	7.72
	7.0	6.0	35.7	10.4	33.6	9.79	31.5	9.17	30.4	8.87	29.4	8.57	27.3	7.97	25.2	7.37
	9.0	7.8	35.7	9.98	33.6	9.38	31.5	8.80	30.4	8.51	29.4	8.22	27.3	7.64	25.2	7.08
	12.0	10.6	35.7	9.35	33.6	8.79	31.5	8.25	30.4	7.97	29.4	7.70	27.3	7.17	25.2	6.64
	15.0	13.5	35.7	8.74	33.6	8.23	31.5	7.72	30.4	7.47	29.4	7.21	27.3	6.72	25.2	6.23
	-19.3	-20.0	26.6	12.7	26.5	13.2	26.5	13.8	26.1	13.8	25.2	13.3	23.4	12.4	21.6	11.4
	-15.0	-16.0	29.2	13.7	28.8	14.0	27.0	13.1	26.1	12.7	25.2	12.2	23.4	11.4	21.6	10.5
	-12.0	-13.0	30.6	13.9	28.8	13.1	27.0	12.3	26.1	11.9	25.2	11.5	23.4	10.7	21.6	9.86
	-9.0	-10.0	30.6	13.0	28.8	12.2	27.0	11.5	26.1	11.1	25.2	10.7	23.4	9.96	21.6	9.22
	-7.0	-8.0	30.6	12.4	28.8	11.7	27.0	10.9	26.1	10.6	25.2	10.2	23.4	9.51	21.6	8.80
	-5.0	-6.0	30.6	11.8	28.8	11.1	27.0	10.4	26.1	10.1	25.2	9.76	23.4	9.08	21.6	8.41
27.0	-3.0	-4.0	30.6	11.3	28.8	10.6	27.0	9.96	26.1	9.64	25.2	9.31	23.4	8.66	21.6	8.02
	-1.0	-2.0	30.6	10.8	28.8	10.1	27.0	9.50	26.1	9.19	25.2	8.88	23.4	8.27	21.6	7.66
(60%)	0.0	-1.0	30.6	10.5	28.8	9.89	27.0	9.28	26.1	8.98	25.2	8.68	23.4	8.08	21.6	7.48
	2.0	1.0	30.6	10.0	28.8	9.44	27.0	8.86	26.1	8.57	25.2	8.28	23.4	7.71	21.6	7.14
	5.0	4.0	30.6	9.34	28.8	8.80	27.0	8.26	26.1	7.99	25.2	7.72	23.4	7.19	21.6	6.67
	7.0	6.0	30.6	8.91	28.8	8.39	27.0	7.88	26.1	7.63	25.2	7.37	23.4	6.87	21.6	6.37
	9.0	7.8	30.6	8.55	28.8	8.05	27.0	7.56	26.1	7.32	25.2	7.08	23.4	6.59	21.6	6.12
	12.0	10.6	30.6	8.01	28.8	7.55	27.0	7.09	26.1	6.87	25.2	6.64	23.4	6.19	21.6	5.75
	15.0	13.5	30.6	7.50	28.8	7.07	27.0	6.65	26.1	6.44	25.2	6.23	23.4	5.81	21.6	5.40
	-19.3	-20.0	25.5	13.4	24.0	12.7	22.5	11.9	21.7	11.5	21.0	11.1	19.5	10.4	18.0	9.61
	-15.0	-16.0	25.5	12.4	24.0	11.7	22.5	11.0	21.7	10.6	21.0	10.3	19.5	9.55	18.0	8.85
	-12.0	-13.0	25.5	11.6	24.0	10.9	22.5	10.3	21.7	9.93	21.0	9.60	19.5	8.94	18.0	8.29
	-9.0	-10.0	25.5	10.8	24.0	10.2	22.5	9.59	21.7	9.28	21.0	8.97	19.5	8.36	18.0	7.75
	-7.0	-8.0	25.5	10.3	24.0	9.75	22.5	9.16	21.7	8.86	21.0	8.57	19.5	7.99	18.0	7.41
	-5.0	-6.0	25.5	9.87	24.0	9.30	22.5	8.74	21.7	8.46	21.0	8.18	19.5	7.63	18.0	7.08
22.5	-3.0	-4.0	25.5	9.42	24.0	8.88	22.5	8.34	21.7	8.08	21.0	7.81	19.5	7.28	18.0	6.76
	-1.0	-2.0	25.5	8.99	24.0	8.47	22.5	7.96	21.7	7.71	21.0	7.46	19.5	6.95	18.0	6.46
(50%)	0.0	-1.0	25.5	8.78	24.0	8.28	22.5	7.78	21.7	7.53	21.0	7.29	19.5	6.80	18.0	6.31
	2.0	1.0	25.5	8.38	24.0	7.90	22.5	7.43	21.7	7.19	21.0	6.96	19.5	6.49	18.0	6.03
	5.0	4.0	25.5	7.81	24.0	7.37	22.5	6.93	21.7	6.71	21.0	6.49	19.5	6.06	18.0	5.64
	7.0	6.0	25.5	7.46	24.0	7.04	22.5	6.62	21.7	6.41	21.0	6.21	19.5	5.80	18.0	5.39
	9.0	7.8	25.5	7.16	24.0	6.75	22.5	6.36	21.7	6.16	21.0	5.96	19.5	5.57	18.0	5.18
	12.0	10.6	25.5	6.72	24.0	6.34	22.5	5.97	21.7	5.79	21.0	5.60	19.5	5.24	18.0	4.88
	15.0	13.5	25.5	6.30	24.0	5.95	22.5	5.60	21.7	5.43	21.0	5.26	19.5	4.92	18.0	4.59

TC : Total Capacity kW.

PI : Power Input kW (Compressor + Outdoor fan motor).

The data is based on the following conditions. Pipe length : 7.5 m; Height difference : 0 m.

MODEL SELECTION

HEATING CAPACITY

■ MODELS : AJ*A72L + AJ*A72U

• CAPACITY : 44.8kW (16HP)

Total rated heating capacity of indoor unit	Outdoor temperature		Indoor temperature													
			16°CDB		18°CDB		20°CDB		21°CDB		22°CDB		24°CDB		26°CDB	
	(°CDB)	(°CWB)	TC	PI	TC	PI	TC	PI	TC	PI	TC	PI	TC	PI	TC	PI
	-19.3	-20.0	30.0	8.23	29.9	8.76	29.8	9.29	29.7	9.56	29.6	9.82	29.5	10.4	29.3	10.9
	-15.0	-16.0	33.5	8.95	33.3	9.46	33.1	9.97	33.0	10.2	32.9	10.5	32.7	11.0	32.5	11.5
	-12.0	-13.0	36.3	9.46	36.1	9.96	35.9	10.5	35.8	10.7	35.7	11.0	35.4	11.4	35.2	11.9
	-9.0	-10.0	39.4	9.94	39.1	10.4	38.9	10.9	38.7	11.2	38.6	11.4	38.3	11.9	38.1	12.4
	-7.0	-8.0	41.5	10.3	41.2	10.7	40.9	11.2	40.8	11.5	40.7	11.7	40.4	12.2	40.1	12.6
	-5.0	-6.0	43.7	10.6	43.4	11.0	43.1	11.5	43.0	11.7	42.8	12.0	42.5	12.5	42.1	12.9
75.0	-3.0	-4.0	46.0	10.8	45.7	11.3	45.4	11.8	45.2	12.0	45.0	12.3	44.6	12.7	44.3	13.2
	-1.0	-2.0	48.4	11.1	48.0	11.6	47.7	12.1	47.5	12.3	47.3	12.5	46.9	13.0	46.5	13.5
(150%)	0.0	-1.0	49.6	11.3	49.2	11.7	48.8	12.2	48.6	12.4	48.4	12.7	48.0	13.1	47.6	13.6
	2.0	1.0	52.1	11.5	51.6	12.0	51.2	12.5	51.0	12.7	50.8	12.9	50.3	13.4	49.9	13.9
	5.0	4.0	55.8	12.0	55.4	12.4	54.9	12.9	54.6	13.1	54.4	13.4	53.9	13.8	53.4	14.3
	7.0	6.0	58.4	12.2	57.9	12.7	57.4	13.2	57.1	13.4	56.9	13.6	56.3	14.1	55.8	14.6
	9.0	7.8	60.8	12.5	60.2	12.9	59.7	13.4	59.4	13.7	59.1	13.9	58.6	14.4	58.0	14.8
	12.0	10.6	64.5	12.9	63.9	13.3	63.3	13.8	63.0	14.1	62.7	14.3	62.1	14.8	60.0	14.6
	15.0	13.5	68.4	13.3	67.7	13.8	67.1	14.2	66.8	14.5	66.5	14.7	65.0	14.9	60.0	13.7
	-19.3	-20.0	30.0	8.46	29.8	8.99	29.7	9.52	29.6	9.78	29.5	10.0	29.4	10.6	29.2	11.1
	-15.0	-16.0	33.4	9.20	33.2	9.70	33.0	10.2	32.9	10.5	32.8	10.7	32.6	11.2	32.4	11.7
	-12.0	-13.0	36.2	9.72	36.0	10.2	35.8	10.7	35.6	11.0	35.5	11.2	35.3	11.7	35.1	12.2
	-9.0	-10.0	39.2	10.2	39.0	10.7	38.7	11.2	38.6	11.4	38.4	11.7	38.2	12.1	37.9	12.6
	-7.0	-8.0	41.4	10.5	41.1	11.0	40.8	11.5	40.6	11.7	40.5	12.0	40.2	12.4	39.9	12.9
	-5.0	-6.0	43.6	10.8	43.2	11.3	42.9	11.8	42.8	12.0	42.6	12.3	42.3	12.7	41.9	13.2
70.0	-3.0	-4.0	45.8	11.2	45.5	11.6	45.1	12.1	44.9	12.3	44.8	12.6	44.4	13.0	44.1	13.5
	-1.0	-2.0	48.1	11.5	47.8	11.9	47.4	12.4	47.2	12.6	47.0	12.9	46.6	13.3	46.2	13.8
(140%)	0.0	-1.0	49.3	11.6	48.9	12.1	48.5	12.5	48.3	12.8	48.1	13.0	47.7	13.5	47.3	13.9
	2.0	1.0	51.7	11.9	51.3	12.4	50.9	12.8	50.7	13.1	50.5	13.3	50.0	13.7	49.6	14.2
	5.0	4.0	55.5	12.3	55.0	12.8	54.5	13.3	54.3	13.5	54.0	13.7	53.5	14.2	53.0	14.7
	7.0	6.0	58.0	12.6	57.5	13.1	57.0	13.5	56.7	13.8	56.5	14.0	55.9	14.5	55.4	14.9
	9.0	7.8	60.3	12.9	59.8	13.3	59.2	13.8	58.9	14.1	58.7	14.3	58.1	14.8	56.0	14.6
	12.0	10.6	63.9	13.3	63.4	13.8	62.8	14.2	62.5	14.5	62.2	14.7	60.7	14.8	56.0	13.6
	15.0	13.5	67.8	13.7	67.1	14.2	66.5	14.7	66.2	14.9	65.3	15.0	60.7	13.8	56.0	12.7
	-19.3	-20.0	29.9	8.72	29.8	9.25	29.6	9.77	29.5	10.0	29.5	10.3	29.3	10.8	29.2	11.4
	-15.0	-16.0	33.3	9.47	33.1	9.98	32.9	10.5	32.8	10.7	32.7	11.0	32.5	11.5	32.3	12.0
	-12.0	-13.0	36.1	10.0	35.9	10.5	35.6	11.0	35.5	11.2	35.4	11.5	35.2	12.0	34.9	12.5
	-9.0	-10.0	39.1	10.5	38.8	11.0	38.5	11.5	38.4	11.7	38.3	12.0	38.0	12.5	37.7	12.9
	-7.0	-8.0	41.2	10.9	40.9	11.3	40.6	11.8	40.4	12.0	40.3	12.3	40.0	12.8	39.7	13.2
	-5.0	-6.0	43.3	11.2	43.0	11.7	42.7	12.1	42.5	12.4	42.4	12.6	42.0	13.1	41.7	13.5
65.0	-3.0	-4.0	45.6	11.5	45.2	12.0	44.9	12.4	44.7	12.7	44.5	12.9	44.2	13.4	43.8	13.8
	-1.0	-2.0	47.9	11.8	47.5	12.3	47.1	12.7	46.9	13.0	46.7	13.2	46.3	13.7	45.9	14.1
(130%)	0.0	-1.0	49.0	12.0	48.6	12.4	48.2	12.9	48.0	13.1	47.8	13.4	47.4	13.8	47.0	14.3
	2.0	1.0	51.4	12.3	51.0	12.7	50.5	13.2	50.3	13.4	50.1	13.7	49.7	14.1	49.2	14.6
	5.0	4.0	55.0	12.7	54.6	13.2	54.1	13.7	53.8	13.9	53.6	14.1	53.1	14.6	52.0	14.8
	7.0	6.0	57.5	13.1	57.0	13.5	56.5	14.0	56.2	14.2	56.0	14.4	55.4	14.9	52.0	14.1
	9.0	7.8	59.8	13.3	59.2	13.8	58.7	14.3	58.4	14.5	58.1	14.7	56.3	14.7	52.0	13.5
	12.0	10.6	63.3	13.8	62.7	14.3	62.1	14.7	61.8	15.0	60.7	14.8	56.3	13.7	52.0	12.6
	15.0	13.5	67.1	14.3	66.4	14.7	65.0	14.9	62.8	14.4	60.7	13.8	56.3	12.8	52.0	11.8
	-19.3	-20.0	29.8	9.02	29.7	9.55	29.5	10.1	29.5	10.3	29.4	10.6	29.2	11.1	29.1	11.6
	-15.0	-16.0	33.2	9.80	33.0	10.3	32.8	10.8	32.7	11.1	32.6	11.3	32.4	11.8	32.2	12.3
	-12.0	-13.0	35.9	10.4	35.7	10.8	35.5	11.3	35.4	11.6	35.2	11.8	35.0	12.3	34.8	12.8
	-9.0	-10.0	38.9	10.9	38.6	11.4	38.3	11.8	38.2	12.1	38.1	12.3	37.8	12.8	37.5	13.3
	-7.0	-8.0	40.9	11.2	40.6	11.7	40.4	12.2	40.2	12.4	40.1	12.7	39.8	13.1	39.5	13.6
	-5.0	-6.0	43.1	11.6	42.7	12.0	42.4	12.5	42.3	12.7	42.1	13.0	41.8	13.4	41.4	13.9
60.0	-3.0	-4.0	45.3	11.9	44.9	12.4	44.6	12.8	44.4	13.1	44.2	13.3	43.9	13.8	43.5	14.2
	-1.0	-2.0	47.5	12.2	47.1	12.7	46.8	13.2	46.6	13.4	46.4	13.6	46.0	14.1	45.6	14.5
(120%)	0.0	-1.0	48.7	12.4	48.3	12.9	47.9	13.3	47.7	13.6	47.5	13.8	47.1	14.2	46.6	14.7
	2.0	1.0	51.0	12.7	50.5	13.2	50.1	13.7	49.9	13.9	49.7	14.1	49.2	14.6	48.0	14.6
	5.0	4.0	54.5	13.2	54.1	13.7	53.6	14.1	53.3	14.4	53.1	14.6	52.0	14.8	48.0	13.6
	7.0	6.0	57.0	13.6	56.4	14.0	55.9	14.5	55.7	14.7	55.4	14.9	52.0	14.1	48.0	13.0
	9.0	7.8	59.2	13.9	58.6	14.3	58.1	14.8	57.8	15.0	56.0	14.6	52.0	13.5	48.0	12.4
	12.0	10.6	62.6	14.4	62.0	14.8	60.0	14.6	58.0	14.1	56.0	13.6	52.0	12.6	48.0	11.6
	15.0	13.5	66.2	14.9	64.0	14.6	60.0	13.7	58.0	13.2	56.0	12.7	52.0	11.8	48.0	10.9
	-19.3	-20.0	29.7	9.38	29.6	9.90	29.4	10.4	29.4	10.7	29.3	10.9	29.1	11.5	29.0	12.0
	-15.0	-16.0	33.0	10.2	32.8	10.7	32.6	11.2	32.6	11.4	32.5	11.7	32.3	12.2	32.1	12.7
	-12.0	-13.0	35.7	10.8	35.5	11.2	35.3	11.7	35.2	12.0	35.1	12.2	34.8	12.7	34.6	13.2
	-9.0	-10.0	38.6	11.3	38.4	11.8	38.1	12.3	38.0	12.5	37.9	12.7	37.6	13.2	37.3	13.7
	-7.0	-8.0	40.7	11.7	40.4	12.1	40.1	12.6	39.9	12.8	39.8	13.1	39.5	13.5	39.2	14.0
	-5.0	-6.0	42.8	12.0	42.4	12.5	42.1	13.0	42.0	13.2	41.8	13.4	41.5	13.9	41.1	14.3
55.0	-3.0	-4.0	44.9	12.4	44.6	12.8	44.2	13.3	44.0	13.5	43.9	13.8	43.5	14.2	43.1	14.7
	-1.0	-2.0	47.1	12.7	46.7	13.2	46.3	13.6	46.2	13.9	46.0	14.1	45.6	14.6	44.0	14.4
(110%)	0.0	-1.0	48.2	12.9	47.8	13.4	47.4	13.8	47.2	14.0	47.0	14.3	46.6	14.7	44.0	14.1
	2.0	1.0	50.5	13.3	50.1	13.7	49.6	14.2	49.4	14.4	49.2	14.6	47.7	14.5	44.0	13.4
	5.0	4.0	54.0	13.8	53.5	14.2	53.0	14.7	52.8	14.9	51.3	14.6	47.7	13.5	44.0	12.5
	7.0	6.0	56.3	14.2	55.8	14.6	55.0	14.9	53.2	14.4	51.3	13.9	47.7	12.9	44.0	11.9
	9.0	7.8	58.4	14.5	57.9	14.9	55.0	14.3	53.2	13.8	51.3	13.3	47.7	12.3	44.0	11.4
	12.0	10.6	61.8	15.0	58.7	14.3	55.0	13.4	53.2	12.9	51.3	12.5	47.7	11.6	44.0	10.7
	15.0	13.5	62.3	14.2	58.7	13.4	55.0	12.5	53.2	12.1	51.3	11.6	47.7	10.8	44.0	9.99

TC : Total Capacity kW.

PI : Power Input kW (Compressor + Outdoor fan motor).

The data is based on the following conditions. Pipe length : 7.5 m; Height difference : 0 m.

MODEL SELECTION

HEATING CAPACITY

■ MODELS : AJ*A72L + AJ*A72U

• CAPACITY : 44.8kW (16HP)

Total rated heating capacity of indoor unit	Outdoor temperature		Indoor temperature													
			16°CDB		18°CDB		20°CDB		21°CDB		22°CDB		24°CDB		26°CDB	
	(°CDB)	(°CWB)	TC	PI	TC	PI	TC	PI	TC	PI	TC	PI	TC	PI	TC	PI
	-19.3	-20.0	29.6	9.80	29.5	10.3	29.3	10.8	29.2	11.1	29.2	11.4	29.0	11.9	28.9	12.4
	-15.0	-16.0	32.9	10.6	32.7	11.1	32.5	11.6	32.4	11.9	32.3	12.1	32.1	12.6	31.9	13.1
	-12.0	-13.0	35.5	11.2	35.3	11.7	35.1	12.2	35.0	12.4	34.8	12.7	34.6	13.1	34.4	13.6
	-9.0	-10.0	38.4	11.8	38.1	12.3	37.8	12.7	37.7	13.0	37.6	13.2	37.3	13.7	37.0	14.2
	-7.0	-8.0	40.4	12.2	40.1	12.7	39.8	13.1	39.6	13.3	39.5	13.6	39.2	14.0	38.9	14.5
	-5.0	-6.0	42.4	12.6	42.1	13.0	41.8	13.5	41.6	13.7	41.4	13.9	41.1	14.4	40.0	14.4
50.0	-3.0	-4.0	44.5	12.9	44.1	13.4	43.8	13.8	43.6	14.1	43.4	14.3	43.1	14.8	40.0	13.8
	-1.0	-2.0	46.6	13.3	46.2	13.8	45.9	14.2	45.7	14.4	45.5	14.7	43.3	14.2	40.0	13.1
(100%)	0.0	-1.0	47.7	13.5	47.3	14.0	46.9	14.4	46.7	14.6	46.5	14.8	43.3	13.9	40.0	12.8
	2.0	1.0	49.9	13.9	49.5	14.3	49.0	14.8	48.3	14.7	46.7	14.2	43.3	13.2	40.0	12.2
	5.0	4.0	53.3	14.4	52.8	14.9	50.0	14.2	48.3	13.7	46.7	13.2	43.3	12.3	40.0	11.3
	7.0	6.0	55.5	14.8	53.3	14.5	50.0	13.5	48.3	13.1	46.7	12.6	43.3	11.7	40.0	10.8
	9.0	7.8	56.7	14.7	53.3	13.8	50.0	13.0	48.3	12.5	46.7	12.1	43.3	11.2	40.0	10.4
	12.0	10.6	56.7	13.8	53.3	13.0	50.0	12.1	48.3	11.7	46.7	11.3	43.3	10.5	40.0	9.73
	15.0	13.5	56.7	12.9	53.3	12.1	50.0	11.3	48.3	11.0	46.7	10.6	43.3	9.84	40.0	9.11
	-19.3	-20.0	29.5	10.3	29.3	10.8	29.2	11.3	29.1	11.6	29.0	11.9	28.9	12.4	28.7	12.9
	-15.0	-16.0	32.7	11.2	32.5	11.7	32.3	12.2	32.2	12.4	32.1	12.6	31.9	13.1	31.7	13.6
	-12.0	-13.0	35.3	11.8	35.0	12.3	34.8	12.7	34.7	13.0	34.6	13.2	34.3	13.7	34.1	14.2
	-9.0	-10.0	38.0	12.4	37.8	12.9	37.5	13.3	37.4	13.6	37.2	13.8	37.0	14.3	36.0	14.3
	-7.0	-8.0	40.0	12.8	39.7	13.3	39.4	13.7	39.2	14.0	39.1	14.2	38.8	14.6	36.0	13.6
	-5.0	-6.0	41.9	13.2	41.6	13.7	41.3	14.1	41.1	14.3	41.0	14.6	39.0	14.1	36.0	13.0
45.0	-3.0	-4.0	44.0	13.6	43.6	14.1	43.3	14.5	43.1	14.7	42.0	14.4	39.0	13.4	36.0	12.4
	-1.0	-2.0	46.0	14.0	45.7	14.4	45.0	14.7	43.5	14.2	42.0	13.8	39.0	12.8	36.0	11.8
(90%)	0.0	-1.0	47.1	14.2	46.7	14.6	45.0	14.4	43.5	13.9	42.0	13.4	39.0	12.5	36.0	11.5
	2.0	1.0	49.2	14.6	48.0	14.6	45.0	13.7	43.5	13.2	42.0	12.8	39.0	11.9	36.0	11.0
	5.0	4.0	51.0	14.5	48.0	13.6	45.0	12.8	43.5	12.3	42.0	11.9	39.0	11.1	36.0	10.3
	7.0	6.0	51.0	13.8	48.0	13.0	45.0	12.2	43.5	11.8	42.0	11.4	39.0	10.6	36.0	9.78
	9.0	7.8	51.0	13.2	48.0	12.4	45.0	11.7	43.5	11.3	42.0	10.9	39.0	10.1	36.0	9.38
	12.0	10.6	51.0	12.4	48.0	11.6	45.0	10.9	43.5	10.6	42.0	10.2	39.0	9.50	36.0	8.81
	15.0	13.5	51.0	11.6	48.0	10.9	45.0	10.2	43.5	9.88	42.0	9.55	39.0	8.90	36.0	8.26
	-19.3	-20.0	29.3	10.9	29.1	11.5	29.0	12.0	28.9	12.2	28.8	12.5	28.7	13.0	28.5	13.5
	-15.0	-16.0	32.4	11.8	32.2	12.3	32.0	12.8	31.9	13.1	31.8	13.3	31.6	13.8	31.4	14.3
	-12.0	-13.0	34.9	12.5	34.7	13.0	34.5	13.4	34.4	13.7	34.2	13.9	34.0	14.4	32.0	13.7
	-9.0	-10.0	37.6	13.1	37.4	13.6	37.1	14.0	37.0	14.3	36.8	14.5	34.7	13.8	32.0	12.8
	-7.0	-8.0	39.5	13.6	39.2	14.0	38.9	14.5	38.7	14.6	37.3	14.1	34.7	13.2	32.0	12.2
	-5.0	-6.0	41.4	14.0	41.1	14.4	40.0	14.4	38.7	14.0	37.3	13.5	34.7	12.5	32.0	11.6
40.0	-3.0	-4.0	43.3	14.4	42.7	14.7	40.0	13.8	38.7	13.3	37.3	12.8	34.7	12.0	32.0	11.1
	-1.0	-2.0	45.3	14.8	42.7	14.0	40.0	13.1	38.7	12.7	37.3	12.2	34.7	11.4	32.0	10.6
(80%)	0.0	-1.0	45.3	14.5	42.7	13.6	40.0	12.8	38.7	12.4	37.3	12.0	34.7	11.1	32.0	10.3
	2.0	1.0	45.3	13.8	42.7	13.0	40.0	12.2	38.7	11.8	37.3	11.4	34.7	10.6	32.0	9.83
	5.0	4.0	45.3	12.8	42.7	12.1	40.0	11.4	38.7	11.0	37.3	10.6	34.7	9.89	32.0	9.17
	7.0	6.0	45.3	12.2	42.7	11.5	40.0	10.8	38.7	10.5	37.3	10.1	34.7	9.44	32.0	8.76
	9.0	7.8	45.3	11.7	42.7	11.1	40.0	10.4	38.7	10.0	37.3	9.71	34.7	9.06	32.0	8.41
	12.0	10.6	45.3	11.0	42.7	10.4	40.0	9.73	38.7	9.42	37.3	9.11	34.7	8.50	32.0	7.90
	15.0	13.5	45.3	10.3	42.7	9.69	40.0	9.11	38.7	8.83	37.3	8.54	34.7	7.97	32.0	7.42
	-19.3	-20.0	29.1	11.7	28.9	12.2	28.8	12.8	28.7	13.0	28.6	13.3	28.4	13.8	28.0	14.0
	-15.0	-16.0	32.1	12.7	31.9	13.2	31.7	13.6	31.6	13.9	31.5	14.1	30.3	13.9	28.0	12.9
	-12.0	-13.0	34.5	13.4	34.3	13.8	34.1	14.3	33.8	14.4	32.7	14.0	30.3	13.0	28.0	12.1
	-9.0	-10.0	37.1	14.0	36.8	14.5	35.0	13.9	33.8	13.5	32.7	13.0	30.3	12.1	28.0	11.2
	-7.0	-8.0	38.9	14.5	37.3	14.1	35.0	13.3	33.8	12.8	32.7	12.4	30.3	11.6	28.0	10.7
	-5.0	-6.0	39.7	14.3	37.3	13.5	35.0	12.7	33.8	12.2	32.7	11.8	30.3	11.0	28.0	10.2
35.0	-3.0	-4.0	39.7	13.6	37.3	12.8	35.0	12.1	33.8	11.7	32.7	11.3	30.3	10.5	28.0	9.76
	-1.0	-2.0	39.7	13.0	37.3	12.2	35.0	11.5	33.8	11.1	32.7	10.8	30.3	10.0	28.0	9.32
(70%)	0.0	-1.0	39.7	12.7	37.3	12.0	35.0	11.2	33.8	10.9	32.7	10.5	30.3	9.80	28.0	9.10
	2.0	1.0	39.7	12.1	37.3	11.4	35.0	10.7	33.8	10.4	32.7	10.0	30.3	9.35	28.0	8.69
	5.0	4.0	39.7	11.3	37.3	10.6	35.0	9.98	33.8	9.66	32.7	9.35	30.3	8.73	28.0	8.12
	7.0	6.0	39.7	10.7	37.3	10.1	35.0	9.52	33.8	9.22	32.7	8.93	30.3	8.34	28.0	7.76
	9.0	7.8	39.7	10.3	37.3	9.71	35.0	9.14	33.8	8.85	32.7	8.57	30.3	8.01	28.0	7.45
	12.0	10.6	39.7	9.65	37.3	9.11	35.0	8.58	33.8	8.31	32.7	8.05	30.3	7.53	28.0	7.01
	15.0	13.5	39.7	9.04	37.3	8.54	35.0	8.04	33.8	7.80	32.7	7.56	30.3	7.07	28.0	6.60
	-19.3	-20.0	28.7	12.8	28.6	13.3	28.4	13.8	28.4	14.0	28.0	14.0	26.0	13.1	24.0	12.2
	-15.0	-16.0	31.6	13.8	31.4	14.2	30.0	13.8	29.0	13.3	28.0	12.9	26.0	12.0	24.0	11.2
	-12.0	-13.0	34.0	14.5	32.0	13.7	30.0	12.9	29.0	12.5	28.0	12.1	26.0	11.2	24.0	10.4
	-9.0	-10.0	34.0	13.5	32.0	12.8	30.0	12.0	29.0	11.6	28.0	11.2	26.0	10.5	24.0	9.75
	-7.0	-8.0	34.0	12.9	32.0	12.2	30.0	11.5	29.0	11.1	28.0	10.7	26.0	10.0	24.0	9.31
	-5.0	-6.0	34.0	12.3	32.0	11.6	30.0	10.9	29.0	10.6	28.0	10.2	26.0	9.56	24.0	8.89
30.0	-3.0	-4.0	34.0	11.7	32.0	11.1	30.0	10.4	29.0	10.1	28.0	9.76	26.0	9.12	24.0	8.49
	-1.0	-2.0	34.0	11.2	32.0	10.6	30.0	9.93	29.0	9.62	28.0	9.32	26.0	8.71	24.0	8.10
(60%)	0.0	-1.0	34.0	10.9	32.0	10.3	30.0	9.70	29.0	9.40	28.0	9.10	26.0	8.51	24.0	7.92
	2.0	1.0	34.0	10.4	32.0	9.83	30.0	9.26	29.0	8.97	28.0	8.69	26.0	8.13	24.0	7.57
	5.0	4.0	34.0	9.71	32.0	9.17	30.0	8.64	29.0	8.38	28.0	8.12	26.0	7.60	24.0	7.08
	7.0	6.0	34.0	9.27	32.0	8.76	30.0	8.26	29.0	8.01	28.0	7.76	26.0	7.27	24.0	6.78
	9.0	7.8	34.0	8.89	32.0	8.41	30.0	7.93	29.0	7.69	28.0	7.45	26.0	6.99	24.0	6.52
	12.0	10.6	34.0	8.35	32.0	7.90	30.0	7.45	29.0	7.23	28.0	7.01	26.0	6.58	24.0	6.15
	15.0	13.5	34.0	7.83	32.0	7.42	30.0	7.00	29.0	6.80	28.0	6.60	26.0	6.19	24.0	5.79
	-19.3	-20.0	28.3	14.2	26.7	13.4	25.0	12.6	24.2	12.2	23.3	11.8	21.7	11.1	20.0	10.3
	-15.0	-16.0	28.3	13.0	26.7	12.3	25.0	11.6	24.2	11.2	23.3	10.9	21.7	10.2	20.0	9.46
	-12.0	-13.0	28.3	12.2	26.7	11.5	25.0	10.8	24.2	10.5	23.3	10.2	21.7	9.51	20.0	8.86
	-9.0	-10.0	28.3	11.4	26.7	10.7	25.0	10.1	24.2	9.81	23.3	9.50	21.7	8.89	20.0	8.28
	-7.0	-8.0	28.3	10.9	26.7	10.3	25.0	9.66	24.2	9.37	23.3	9.07	21.7	8.49	20.0	7.91
	-5.0	-6.0	28.3	10.4	26.7	9.78	25.0	9.22	24.2	8.94	23.3	8.66	21.7	8.11	20.0	7.56
25.0	-3.0	-4.0	28.3	9.87	26.7	9.34	25.0	8.80	24.2	8.54	23.3	8.28	21.7	7.75	20.0	7.23
	-1.0	-2.0	28.3	9.42	26.7	8.91	25.0	8.41	24.2	8.15	23.3	7.90	21.7	7.41	20.0	6.92
(50%)	0.0	-1.0	28.3	9.20	26.7	8.71	25.0	8.22	24.2	7.97	23.3	7.73	21.7	7.24	20.0	6.76
	2.0	1.0	28.3	8.79	26.7	8.32	25.0	7.85	24.2	7.62	23.3	7.39	21.7	6.93	20.0	6.47
	5.0	4.0	28.3	8.20	26.7	7.77	25.0	7.34	24.2	7.12	23.3	6.91	21.7	6.49	20.0	6.07
	7.0	6.0	28.3	7.84	26.7	7.43	25.0	7.02	24.2	6.82	23.3	6.62	21.7	6.22	20.0	5.82
	9.0	7.8	28.3	7.53	26.7	7.14	25.0	6.75	24.2	6.56	23.3	6.37	21.7	5.98	20.0	5.61
	12.0	10.6	28.3	7.09	26.7	6.72	25.0	6.36	24.2	6.18	23.3	6.00	21.7	5.65	20.0	5.30
	15.0	13.5	28.3	6.66	26.7	6.33	25.0	5.99	24.2	5.82	23.3	5.66	21.7	5.33	20.0	5.00

TC : Total Capacity kW.

PI : Power Input kW (Compressor + Outdoor fan motor).

The data is based on the following conditions. Pipe length : 7.5 m; Height difference : 0 m.

MODEL SELECTION

■ MODELS : AJ*A90L + AJ*A72U

• CAPACITY : 50.4kW (18HP)

Total rated heating capacity of indoor unit	Outdoor temperature		Indoor temperature													
			16°CDB		18°CDB		20°CDB		21°CDB		22°CDB		24°CDB		26°CDB	
	(°CDB)	(°CWB)	TC	PI	TC	PI	TC	PI	TC	PI	TC	PI	TC	PI	TC	PI
	-19.3	-20.0	33.9	9.22	33.8	9.83	33.6	10.4	33.6	10.7	33.5	11.0	33.3	11.7	33.2	12.3
	-15.0	-16.0	37.8	10.1	37.6	10.6	37.4	11.2	37.3	11.5	37.2	11.8	37.0	12.4	36.8	13.0
	-12.0	-13.0	41.0	10.6	40.8	11.2	40.5	11.8	40.4	12.1	40.3	12.3	40.1	12.9	39.8	13.5
	-9.0	-10.0	44.5	11.2	44.2	11.7	43.9	12.3	43.8	12.6	43.6	12.8	43.3	13.4	43.0	14.0
	-7.0	-8.0	46.9	11.5	46.6	12.1	46.3	12.6	46.1	12.9	45.9	13.2	45.6	13.7	45.3	14.3
	-5.0	-6.0	49.4	11.9	49.1	12.4	48.7	13.0	48.5	13.2	48.4	13.5	48.0	14.0	47.6	14.6
84.8	-3.0	-4.0	52.0	12.2	51.6	12.7	51.2	13.3	51.0	13.6	50.8	13.8	50.5	14.4	50.1	14.9
	-1.0	-2.0	54.7	12.5	54.2	13.1	53.8	13.6	53.6	13.9	53.4	14.1	53.0	14.7	52.5	15.2
(150%)	0.0	-1.0	56.0	12.7	55.6	13.2	55.2	13.8	54.9	14.0	54.7	14.3	54.3	14.8	53.8	15.4
	2.0	1.0	58.8	13.0	58.3	13.5	57.8	14.1	57.6	14.3	57.4	14.6	56.9	15.1	56.4	15.7
	5.0	4.0	63.0	13.5	62.5	14.0	62.0	14.5	61.7	14.8	61.5	15.1	60.9	15.6	60.4	16.2
	7.0	6.0	65.9	13.8	65.4	14.3	64.8	14.9	64.5	15.1	64.2	15.4	63.7	15.9	63.1	16.5
	9.0	7.8	68.6	14.1	68.0	14.6	67.4	15.1	67.1	15.4	66.8	15.7	66.2	16.2	65.5	16.8
	12.0	10.6	72.8	14.5	72.1	15.1	71.5	15.6	71.1	15.9	70.8	16.1	70.1	16.7	67.8	16.6
	15.0	13.5	77.2	15.0	76.5	15.5	75.8	16.1	75.4	16.4	75.0	16.6	73.4	16.8	67.8	15.5
	-19.3	-20.0	33.9	9.48	33.7	10.1	33.6	10.7	33.5	11.0	33.4	11.3	33.3	11.9	33.1	12.5
	-15.0	-16.0	37.7	10.3	37.5	10.9	37.3	11.5	37.2	11.8	37.1	12.1	36.9	12.7	36.7	13.2
	-12.0	-13.0	40.9	10.9	40.7	11.5	40.4	12.1	40.3	12.3	40.2	12.6	39.9	13.2	39.7	13.7
	-9.0	-10.0	44.3	11.5	44.0	12.0	43.8	12.6	43.6	12.9	43.5	13.2	43.2	13.7	42.9	14.3
	-7.0	-8.0	46.7	11.9	46.4	12.4	46.1	13.0	45.9	13.2	45.8	13.5	45.4	14.0	45.1	14.6
	-5.0	-6.0	49.2	12.2	48.8	12.8	48.5	13.3	48.3	13.6	48.1	13.8	47.8	14.4	47.4	14.9
79.1	-3.0	-4.0	51.8	12.6	51.4	13.1	51.0	13.6	50.8	13.9	50.6	14.2	50.2	14.7	49.8	15.2
	-1.0	-2.0	54.4	12.9	54.0	13.4	53.5	14.0	53.3	14.2	53.1	14.5	52.7	15.0	52.3	15.6
(140%)	0.0	-1.0	55.7	13.1	55.3	13.6	54.8	14.1	54.6	14.4	54.4	14.7	54.0	15.2	53.5	15.7
	2.0	1.0	58.4	13.4	58.0	13.9	57.5	14.5	57.3	14.7	57.0	15.0	56.5	15.5	56.0	16.1
	5.0	4.0	62.6	13.9	62.1	14.4	61.6	15.0	61.3	15.2	61.0	15.5	60.5	16.0	59.9	16.6
	7.0	6.0	65.5	14.2	64.9	14.8	64.3	15.3	64.1	15.6	63.8	15.8	63.2	16.4	62.6	16.9
	9.0	7.8	68.1	14.5	67.5	15.1	66.9	15.6	66.6	15.9	66.3	16.1	65.7	16.7	63.3	16.5
	12.0	10.6	72.2	15.0	71.5	15.5	70.9	16.1	70.5	16.4	70.2	16.6	68.6	16.8	63.3	15.4
	15.0	13.5	76.5	15.5	75.8	16.1	75.1	16.6	74.7	16.9	73.8	16.9	68.6	15.6	63.3	14.4
	-19.3	-20.0	33.8	9.78	33.6	10.4	33.5	11.0	33.4	11.3	33.3	11.6	33.2	12.2	33.0	12.8
	-15.0	-16.0	37.6	10.6	37.4	11.2	37.2	11.8	37.1	12.1	37.0	12.4	36.8	13.0	36.6	13.5
	-12.0	-13.0	40.8	11.3	40.5	11.8	40.3	12.4	40.2	12.7	40.0	13.0	39.8	13.5	39.5	14.1
	-9.0	-10.0	44.1	11.9	43.9	12.4	43.6	13.0	43.4	13.2	43.3	13.5	43.0	14.1	42.7	14.6
	-7.0	-8.0	46.5	12.2	46.2	12.8	45.9	13.3	45.7	13.6	45.5	13.9	45.2	14.4	44.9	14.9
	-5.0	-6.0	48.9	12.6	48.6	13.1	48.2	13.7	48.1	13.9	47.9	14.2	47.5	14.8	47.2	15.3
73.5	-3.0	-4.0	51.5	13.0	51.1	13.5	50.7	14.0	50.5	14.3	50.3	14.6	49.9	15.1	49.5	15.6
	-1.0	-2.0	54.1	13.3	53.6	13.9	53.2	14.4	53.0	14.6	52.8	14.9	52.4	15.4	51.9	16.0
(130%)	0.0	-1.0	55.4	13.5	54.9	14.0	54.5	14.6	54.3	14.8	54.1	15.1	53.6	15.6	53.2	16.1
	2.0	1.0	58.0	13.9	57.6	14.4	57.1	14.9	56.9	15.2	56.6	15.4	56.1	16.0	55.6	16.5
	5.0	4.0	62.2	14.4	61.6	14.9	61.1	15.4	60.8	15.7	60.6	16.0	60.0	16.5	58.8	16.7
	7.0	6.0	64.9	14.7	64.4	15.3	63.8	15.8	63.5	16.1	63.2	16.3	62.7	16.9	58.8	15.9
	9.0	7.8	67.5	15.1	66.9	15.6	66.3	16.1	66.0	16.4	65.7	16.7	63.7	16.6	58.8	15.2
	12.0	10.6	71.5	15.6	70.9	16.1	70.2	16.6	69.9	16.9	68.6	16.8	63.7	15.5	58.8	14.2
	15.0	13.5	75.7	16.1	75.0	16.7	73.5	16.8	71.0	16.2	68.6	15.6	63.7	14.5	58.8	13.3
	-19.3	-20.0	33.7	10.1	33.6	10.7	33.4	11.3	33.3	11.6	33.2	11.9	33.1	12.5	32.9	13.1
	-15.0	-16.0	37.5	11.0	37.3	11.6	37.1	12.2	37.0	12.5	36.9	12.7	36.7	13.3	36.5	13.9
	-12.0	-13.0	40.6	11.7	40.4	12.2	40.1	12.8	40.0	13.1	39.9	13.3	39.6	13.9	39.4	14.4
	-9.0	-10.0	43.9	12.3	43.6	12.8	43.4	13.4	43.2	13.6	43.1	13.9	42.8	14.4	42.5	15.0
	-7.0	-8.0	46.3	12.7	45.9	13.2	45.6	13.7	45.5	14.0	45.3	14.3	45.0	14.8	44.6	15.4
	-5.0	-6.0	48.7	13.0	48.3	13.6	48.0	14.1	47.8	14.4	47.6	14.6	47.2	15.2	46.9	15.7
67.8	-3.0	-4.0	51.1	13.4	50.8	14.0	50.4	14.5	50.2	14.8	50.0	15.0	49.6	15.5	49.2	16.1
	-1.0	-2.0	53.7	13.8	53.3	14.3	52.8	14.9	52.6	15.1	52.4	15.4	52.0	15.9	51.5	16.4
(120%)	0.0	-1.0	55.0	14.0	54.5	14.5	54.1	15.0	53.9	15.3	53.6	15.6	53.2	16.1	52.7	16.6
	2.0	1.0	57.6	14.4	57.1	14.9	56.6	15.4	56.4	15.7	56.2	15.9	55.7	16.5	54.2	16.5
	5.0	4.0	61.6	14.9	61.1	15.5	60.5	16.0	60.3	16.2	60.0	16.5	58.8	16.7	54.2	15.4
	7.0	6.0	64.3	15.3	63.8	15.8	63.2	16.4	62.9	16.6	62.6	16.9	58.8	15.9	54.2	14.6
	9.0	7.8	66.8	15.7	66.2	16.2	65.6	16.7	65.3	17.0	63.3	16.5	58.8	15.2	54.2	14.0
	12.0	10.6	70.7	16.2	70.1	16.7	67.8	16.6	65.5	16.0	63.3	15.4	58.8	14.2	54.2	13.1
	15.0	13.5	74.8	16.8	72.3	16.6	67.8	15.5	65.5	14.9	63.3	14.4	58.8	13.3	54.2	12.3
	-19.3	-20.0	33.6	10.5	33.5	11.1	33.3	11.7	33.2	12.0	33.1	12.3	33.0	12.9	32.8	13.5
	-15.0	-16.0	37.3	11.5	37.1	12.0	36.9	12.6	36.8	12.9	36.7	13.2	36.5	13.7	36.3	14.3
	-12.0	-13.0	40.4	12.1	40.2	12.7	39.9	13.2	39.8	13.5	39.7	13.8	39.4	14.3	39.2	14.9
	-9.0	-10.0	43.7	12.7	43.4	13.3	43.1	13.8	43.0	14.1	42.8	14.4	42.5	14.9	42.2	15.5
	-7.0	-8.0	46.0	13.2	45.6	13.7	45.3	14.2	45.2	14.5	45.0	14.8	44.7	15.3	44.3	15.8
	-5.0	-6.0	48.3	13.6	48.0	14.1	47.6	14.6	47.4	14.9	47.3	15.2	46.9	15.7	46.5	16.2
62.2	-3.0	-4.0	50.7	14.0	50.4	14.5	50.0	15.0	49.8	15.3	49.6	15.5	49.2	16.1	48.8	16.6
	-1.0	-2.0	53.2	14.4	52.8	14.9	52.4	15.4	52.2	15.7	52.0	15.9	51.5	16.5	49.7	16.3
(110%)	0.0	-1.0	54.5	14.6	54.1	15.1	53.6	15.6	53.4	15.9	53.2	16.1	52.7	16.7	49.7	15.9
	2.0	1.0	57.0	15.0	56.6	15.5	56.1	16.0	55.9	16.3	55.6	16.5	53.9	16.4	49.7	15.1
	5.0	4.0	61.0	15.6	60.4	16.1	59.9	16.6	59.6	16.9	58.0	16.5	53.9	15.3	49.7	14.1
	7.0	6.0	63.6	16.0	63.0	16.5	62.2	16.9	60.1	16.3	58.0	15.7	53.9	14.5	49.7	13.4
	9.0	7.8	66.0	16.4	65.4	16.9	62.2	16.2	60.1	15.6	58.0	15.0	53.9	13.9	49.7	12.8
	12.0	10.6	69.8	17.0	66.3	16.2	62.2	15.1	60.1	14.6	58.0	14.1	53.9	13.0	49.7	12.0
	15.0	13.5	70.4	16.1	66.3	15.1	62.2	14.1	60.1	13.6	58.0	13.1	53.9	12.2	49.7	11.2

TC : Total Capacity kW.

PI : Power Input kW (Compressor + Outdoor fan motor).

The data is based on the following conditions. Pipe length : 7.5 m; Height difference : 0 m.

MODEL SELECTION

■ MODELS : AJ*A90L + AJ*A72U

• CAPACITY : 50.4kW (18HP)

Total rated heating capacity of indoor unit	Outdoor temperature		Indoor temperature													
			16°CDB		18°CDB		20°CDB		21°CDB		22°CDB		24°CDB		26°CDB	
	(°CDB)	(°CWB)	TC	PI	TC	PI	TC	PI	TC	PI	TC	PI	TC	PI	TC	PI
	-19.3	-20.0	33.5	11.0	33.3	11.6	33.2	12.2	33.1	12.5	33.0	12.8	32.8	13.4	32.7	14.0
	-15.0	-16.0	37.1	12.0	36.9	12.5	36.7	13.1	36.6	13.4	36.5	13.7	36.3	14.2	36.1	14.8
	-12.0	-13.0	40.2	12.6	39.9	13.2	39.7	13.8	39.6	14.0	39.4	14.3	39.2	14.9	38.9	15.4
	-9.0	-10.0	43.4	13.3	43.1	13.9	42.8	14.4	42.7	14.7	42.5	14.9	42.2	15.5	41.9	16.0
	-7.0	-8.0	45.6	13.7	45.3	14.3	45.0	14.8	44.8	15.1	44.6	15.3	44.3	15.9	44.0	16.4
	-5.0	-6.0	47.9	14.2	47.6	14.7	47.2	15.2	47.0	15.5	46.9	15.8	46.5	16.3	45.2	16.3
56.5	-3.0	-4.0	50.3	14.6	49.9	15.1	49.5	15.6	49.3	15.9	49.1	16.2	48.7	16.7	45.2	15.5
	-1.0	-2.0	52.7	15.0	52.3	15.6	51.9	16.1	51.6	16.3	51.4	16.6	49.0	16.0	45.2	14.8
(100%)	0.0	-1.0	53.9	15.2	53.5	15.8	53.0	16.3	52.8	16.5	52.6	16.8	49.0	15.6	45.2	14.4
	2.0	1.0	56.4	15.7	55.9	16.2	55.4	16.7	54.6	16.7	52.7	16.1	49.0	14.9	45.2	13.7
	5.0	4.0	60.2	16.3	59.7	16.8	56.5	16.0	54.6	15.5	52.7	14.9	49.0	13.9	45.2	12.8
	7.0	6.0	62.7	16.8	60.3	16.3	56.5	15.3	54.6	14.8	52.7	14.2	49.0	13.2	45.2	12.2
	9.0	7.8	64.0	16.7	60.3	15.6	56.5	14.6	54.6	14.1	52.7	13.6	49.0	12.6	45.2	11.7
	12.0	10.6	64.0	15.6	60.3	14.6	56.5	13.7	54.6	13.2	52.7	12.8	49.0	11.8	45.2	10.9
	15.0	13.5	64.0	14.6	60.3	13.7	56.5	12.8	54.6	12.4	52.7	11.9	49.0	11.1	45.2	10.2
	-19.3	-20.0	33.3	11.6	33.2	12.2	33.0	12.8	32.9	13.1	32.9	13.4	32.7	14.0	32.5	14.6
	-15.0	-16.0	36.9	12.6	36.7	13.2	36.5	13.7	36.4	14.0	36.3	14.3	36.1	14.8	35.9	15.4
	-12.0	-13.0	39.9	13.3	39.6	13.8	39.4	14.4	39.3	14.7	39.1	14.9	38.9	15.5	38.6	16.0
	-9.0	-10.0	43.0	14.0	42.7	14.5	42.4	15.1	42.3	15.3	42.1	15.6	41.8	16.1	40.7	16.1
	-7.0	-8.0	45.2	14.5	44.9	15.0	44.5	15.5	44.4	15.8	44.2	16.0	43.9	16.6	40.7	15.4
	-5.0	-6.0	47.4	14.9	47.1	15.4	46.7	16.0	46.5	16.2	46.4	16.5	44.1	15.9	40.7	14.7
50.9	-3.0	-4.0	49.7	15.4	49.3	15.9	48.9	16.4	48.7	16.7	47.5	16.3	44.1	15.1	40.7	14.0
	-1.0	-2.0	52.0	15.8	51.6	16.3	50.9	16.7	49.2	16.1	47.5	15.5	44.1	14.4	40.7	13.3
(90%)	0.0	-1.0	53.2	16.1	52.8	16.6	50.9	16.2	49.2	15.7	47.5	15.2	44.1	14.1	40.7	13.0
	2.0	1.0	55.6	16.5	54.2	16.5	50.9	15.5	49.2	15.0	47.5	14.4	44.1	13.4	40.7	12.4
	5.0	4.0	57.6	16.4	54.2	15.4	50.9	14.4	49.2	13.9	47.5	13.4	44.1	12.5	40.7	11.5
	7.0	6.0	57.6	15.6	54.2	14.6	50.9	13.7	49.2	13.3	47.5	12.8	44.1	11.9	40.7	11.0
	9.0	7.8	57.6	14.9	54.2	14.0	50.9	13.1	49.2	12.7	47.5	12.3	44.1	11.4	40.7	10.5
	12.0	10.6	57.6	14.0	54.2	13.1	50.9	12.3	49.2	11.9	47.5	11.5	44.1	10.7	40.7	9.88
	15.0	13.5	57.6	13.0	54.2	12.3	50.9	11.5	49.2	11.1	47.5	10.7	44.1	9.99	40.7	9.26
	-19.3	-20.0	33.1	12.3	33.0	12.9	32.8	13.5	32.7	13.8	32.7	14.1	32.5	14.7	32.3	15.3
	-15.0	-16.0	36.7	13.4	36.4	13.9	36.2	14.5	36.1	14.7	36.0	15.0	35.8	15.6	35.6	16.1
	-12.0	-13.0	39.5	14.1	39.3	14.6	39.0	15.2	38.9	15.4	38.8	15.7	38.5	16.3	36.2	15.4
	-9.0	-10.0	42.6	14.8	42.3	15.4	42.0	15.9	41.8	16.1	41.7	16.4	39.2	15.6	36.2	14.4
	-7.0	-8.0	44.7	15.3	44.3	15.8	44.0	16.4	43.7	16.5	42.2	16.0	39.2	14.8	36.2	13.7
	-5.0	-6.0	46.8	15.8	46.5	16.3	45.2	16.3	43.7	15.7	42.2	15.2	39.2	14.1	36.2	13.1
45.2	-3.0	-4.0	49.0	16.3	48.2	16.6	45.2	15.5	43.7	15.0	42.2	14.5	39.2	13.5	36.2	12.5
	-1.0	-2.0	51.2	16.8	48.2	15.8	45.2	14.8	43.7	14.3	42.2	13.8	39.2	12.8	36.2	11.9
(80%)	0.0	-1.0	51.2	16.4	48.2	15.4	45.2	14.4	43.7	13.9	42.2	13.5	39.2	12.5	36.2	11.6
	2.0	1.0	51.2	15.6	48.2	14.7	45.2	13.7	43.7	13.3	42.2	12.8	39.2	11.9	36.2	11.1
	5.0	4.0	51.2	14.5	48.2	13.6	45.2	12.8	43.7	12.4	42.2	11.9	39.2	11.1	36.2	10.3
	7.0	6.0	51.2	13.8	48.2	13.0	45.2	12.2	43.7	11.8	42.2	11.4	39.2	10.6	36.2	9.83
	9.0	7.8	51.2	13.2	48.2	12.5	45.2	11.7	43.7	11.3	42.2	10.9	39.2	10.2	36.2	9.43
	12.0	10.6	51.2	12.4	48.2	11.7	45.2	10.9	43.7	10.6	42.2	10.2	39.2	9.54	36.2	8.85
	15.0	13.5	51.2	11.6	48.2	10.9	45.2	10.2	43.7	9.91	42.2	9.58	39.2	8.94	36.2	8.30
	-19.3	-20.0	32.9	13.3	32.7	13.8	32.6	14.4	32.5	14.7	32.4	15.0	32.2	15.6	31.6	15.8
	-15.0	-16.0	36.3	14.3	36.1	14.9	35.9	15.4	35.8	15.7	35.7	16.0	34.3	15.7	31.6	14.5
	-12.0	-13.0	39.1	15.1	38.8	15.6	38.6	16.2	38.2	16.3	36.9	15.7	34.3	14.6	31.6	13.6
	-9.0	-10.0	42.0	15.9	41.7	16.4	39.6	15.7	38.2	15.2	36.9	14.7	34.3	13.7	31.6	12.6
	-7.0	-8.0	44.0	16.4	42.2	16.0	39.6	15.0	38.2	14.5	36.9	14.0	34.3	13.0	31.6	12.1
	-5.0	-6.0	44.8	16.2	42.2	15.2	39.6	14.3	38.2	13.8	36.9	13.3	34.3	12.4	31.6	11.5
39.6	-3.0	-4.0	44.8	15.4	42.2	14.5	39.6	13.6	38.2	13.2	36.9	12.7	34.3	11.8	31.6	11.0
	-1.0	-2.0	44.8	14.7	42.2	13.8	39.6	13.0	38.2	12.5	36.9	12.1	34.3	11.3	31.6	10.5
(70%)	0.0	-1.0	44.8	14.3	42.2	13.5	39.6	12.6	38.2	12.2	36.9	11.8	34.3	11.0	31.6	10.2
	2.0	1.0	44.8	13.6	42.2	12.8	39.6	12.1	38.2	11.7	36.9	11.3	34.3	10.5	31.6	9.75
	5.0	4.0	44.8	12.7	42.2	11.9	39.6	11.2	38.2	10.9	36.9	10.5	34.3	9.79	31.6	9.09
	7.0	6.0	44.8	12.1	42.2	11.4	39.6	10.7	38.2	10.4	36.9	10.0	34.3	9.35	31.6	8.68
	9.0	7.8	44.8	11.6	42.2	10.9	39.6	10.3	38.2	9.94	36.9	9.61	34.3	8.97	31.6	8.34
	12.0	10.6	44.8	10.9	42.2	10.2	39.6	9.62	38.2	9.32	36.9	9.02	34.3	8.42	31.6	7.84
	15.0	13.5	44.8	10.2	42.2	9.58	39.6	9.02	38.2	8.74	36.9	8.46	34.3	7.90	31.6	7.36
	-19.3	-20.0	32.6	14.4	32.4	15.0	32.2	15.6	32.1	15.9	31.6	15.8	29.4	14.7	27.1	13.7
	-15.0	-16.0	35.8	15.6	35.6	16.1	33.9	15.5	32.8	15.0	31.6	14.5	29.4	13.5	27.1	12.6
	-12.0	-13.0	38.4	16.4	36.2	15.4	33.9	14.5	32.8	14.0	31.6	13.6	29.4	12.6	27.1	11.7
	-9.0	-10.0	38.4	15.3	36.2	14.4	33.9	13.5	32.8	13.1	31.6	12.6	29.4	11.8	27.1	10.9
	-7.0	-8.0	38.4	14.5	36.2	13.7	33.9	12.9	32.8	12.5	31.6	12.1	29.4	11.3	27.1	10.4
	-5.0	-6.0	38.4	13.9	36.2	13.1	33.9	12.3	32.8	11.9	31.6	11.5	29.4	10.7	27.1	9.96
33.9	-3.0	-4.0	38.4	13.2	36.2	12.5	33.9	11.7	32.8	11.3	31.6	11.0	29.4	10.2	27.1	9.51
	-1.0	-2.0	38.4	12.6	36.2	11.9	33.9	11.2	32.8	10.8	31.6	10.5	29.4	9.76	27.1	9.07
(60%)	0.0	-1.0	38.4	12.3	36.2	11.6	33.9	10.9	32.8	10.6	31.6	10.2	29.4	9.54	27.1	8.86
	2.0	1.0	38.4	11.7	36.2	11.1	33.9	10.4	32.8	10.1	31.6	9.75	29.4	9.10	27.1	8.47
	5.0	4.0	38.4	10.9	36.2	10.3	33.9	9.69	32.8	9.39	31.6	9.09	29.4	8.50	27.1	7.91
	7.0	6.0	38.4	10.4	36.2	9.83	33.9	9.25	32.8	8.97	31.6	8.68	29.4	8.12	27.1	7.56
	9.0	7.8	38.4	9.98	36.2	9.43	33.9	8.88	32.8	8.61	31.6	8.34	29.4	7.80	27.1	7.27
	12.0	10.6	38.4	9.36	36.2	8.85	33.9	8.34	32.8	8.09	31.6	7.84	29.4	7.34	27.1	6.84
	15.0	13.5	38.4	8.78	36.2	8.30	33.9	7.83	32.8	7.59	31.6	7.36	29.4	6.89	27.1	6.44
	-19.3	-20.0	32.0	16.0	30.1	15.1	28.3	14.2	27.3	13.8	26.4	13.3	24.5	12.4	22.6	11.5
	-15.0	-16.0	32.0	14.7	30.1	13.9	28.3	13.0	27.3	12.6	26.4	12.2	24.5	11.4	22.6	10.6
	-12.0	-13.0	32.0	13.7	30.1	13.0	28.3	12.2	27.3	11.8	26.4	11.4	24.5	10.7	22.6	9.92
	-9.0	-10.0	32.0	12.8	30.1	12.1	28.3	11.4	27.3	11.0	26.4	10.7	24.5	9.96	22.6	9.26
	-7.0	-8.0	32.0	12.2	30.1	11.5	28.3	10.8	27.3	10.5	26.4	10.2	24.5	9.51	22.6	8.85
	-5.0	-6.0	32.0	11.6	30.1	11.0	28.3	10.3	27.3	10.0	26.4	9.71	24.5	9.08	22.6	8.45
28.3	-3.0	-4.0	32.0	11.1	30.1	10.5	28.3	9.87	27.3	9.57	26.4	9.27	24.5	8.67	22.6	8.07
	-1.0	-2.0	32.0	10.6	30.1	9.99	28.3	9.42	27.3	9.13	26.4	8.84	24.5	8.28	22.6	7.71
(50%)	0.0	-1.0	32.0	10.3	30.1	9.76	28.3	9.20	27.3	8.92	26.4	8.64	24.5	8.09	22.6	7.54
	2.0	1.0	32.0	9.85	30.1	9.32	28.3	8.78	27.3	8.52	26.4	8.25	24.5	7.73	22.6	7.21
	5.0	4.0	32.0	9.19	30.1	8.69	28.3	8.20	27.3	7.96	26.4	7.71	24.5	7.23	22.6	6.75
	7.0	6.0	32.0	8.78	30.1	8.31	28.3	7.84	27.3	7.61	26.4	7.38	24.5	6.92	22.6	6.47
	9.0	7.8	32.0	8.43	30.1	7.98	28.3	7.53	27.3	7.31	26.4	7.09	24.5	6.66	22.6	6.22
	12.0	10.6	32.0	7.92	30.1	7.50	28.3	7.09	27.3	6.88	26.4	6.68	24.5	6.27	22.6	5.87
	15.0	13.5	32.0	7.44	30.1	7.05	28.3	6.67	27.3	6.47	26.4	6.29	24.5	5.91	22.6	5.54

TC : Total Capacity kW.

PI : Power Input kW (Compressor + Outdoor fan motor).

The data is based on the following conditions. Pipe length : 7.5 m; Height difference : 0 m.

MODEL SELECTION

HEATING CAPACITY

■ MODELS : AJ*A90L + AJ*A90U

• CAPACITY : 56.0kW (20HP)

Total rated heating capacity of indoor unit	Outdoor temperature		Indoor temperature													
			16°CDB		18°CDB		20°CDB		21°CDB		22°CDB		24°CDB		26°CDB	
	(°CDB)	(°CWB)	TC	PI	TC	PI	TC	PI	TC	PI	TC	PI	TC	PI	TC	PI
94.5 (150%)	-19.3	-20.0	37.8	10.2	37.7	10.9	37.5	11.6	37.4	11.9	37.4	12.3	37.2	13.0	37.0	13.6
	-15.0	-16.0	42.1	11.1	41.9	11.8	41.7	12.5	41.6	12.8	41.5	13.1	41.3	13.8	41.1	14.4
	-12.0	-13.0	45.7	11.8	45.5	12.4	45.2	13.1	45.1	13.4	45.0	13.7	44.7	14.4	44.4	15.0
	-9.0	-10.0	49.6	12.4	49.3	13.0	49.0	13.7	48.8	14.0	48.7	14.3	48.3	14.9	48.0	15.5
	-7.0	-8.0	52.3	12.8	51.9	13.4	51.6	14.1	51.4	14.4	51.2	14.7	50.9	15.3	50.5	15.9
	-5.0	-6.0	55.1	13.2	54.7	13.8	54.3	14.4	54.1	14.7	53.9	15.0	53.5	15.6	53.1	16.3
	-3.0	-4.0	58.0	13.6	57.5	14.2	57.1	14.8	56.9	15.1	56.7	15.4	56.3	16.0	55.8	16.6
	-1.0	-2.0	60.9	13.9	60.5	14.5	60.0	15.1	59.8	15.4	59.5	15.8	59.1	16.4	58.6	17.0
	0.0	-1.0	62.4	14.1	62.0	14.7	61.5	15.3	61.2	15.6	61.0	15.9	60.5	16.5	60.0	17.1
	2.0	1.0	65.5	14.5	65.0	15.1	64.5	15.7	64.2	16.0	64.0	16.3	63.4	16.9	62.9	17.5
	5.0	4.0	70.2	15.0	69.7	15.6	69.1	16.2	68.8	16.5	68.5	16.8	67.9	17.4	67.3	18.0
	7.0	6.0	73.5	15.3	72.9	16.0	72.2	16.6	71.9	16.9	71.6	17.2	71.0	17.8	70.3	18.4
	9.0	7.8	76.4	15.7	75.8	16.3	75.1	16.9	74.8	17.2	74.4	17.5	73.8	18.1	73.1	18.7
	12.0	10.6	81.1	16.2	80.4	16.8	79.7	17.4	79.3	17.7	78.9	18.0	78.2	18.6	75.6	18.5
	15.0	13.5	86.0	16.7	85.2	17.3	84.4	17.9	84.0	18.2	83.6	18.6	81.9	18.8	75.6	17.2
88.2 (140%)	-19.3	-20.0	37.8	10.5	37.6	11.2	37.4	11.9	37.4	12.2	37.3	12.6	37.1	13.2	36.9	13.9
	-15.0	-16.0	42.0	11.5	41.8	12.1	41.6	12.8	41.5	13.1	41.4	13.4	41.2	14.1	41.0	14.7
	-12.0	-13.0	45.6	12.1	45.3	12.8	45.1	13.4	44.9	13.7	44.8	14.0	44.5	14.7	44.3	15.3
	-9.0	-10.0	49.4	12.8	49.1	13.4	48.8	14.0	48.6	14.3	48.5	14.6	48.2	15.3	47.8	15.9
	-7.0	-8.0	52.1	13.2	51.7	13.8	51.4	14.4	51.2	14.7	51.0	15.0	50.7	15.6	50.3	16.3
	-5.0	-6.0	54.8	13.6	54.5	14.2	54.1	14.8	53.9	15.1	53.7	15.4	53.3	16.0	52.9	16.6
	-3.0	-4.0	57.7	14.0	57.3	14.6	56.8	15.2	56.6	15.5	56.4	15.8	56.0	16.4	55.6	17.0
	-1.0	-2.0	60.6	14.4	60.2	15.0	59.7	15.6	59.5	15.9	59.2	16.2	58.8	16.8	58.3	17.4
	0.0	-1.0	62.1	14.5	61.6	15.1	61.1	15.7	60.9	16.0	60.7	16.3	60.2	16.9	59.7	17.5
	2.0	1.0	65.1	14.9	64.6	15.5	64.1	16.1	63.8	16.4	63.6	16.7	63.0	17.3	62.5	17.9
	5.0	4.0	69.8	15.5	69.2	16.1	68.6	16.7	68.3	17.0	68.0	17.3	67.5	17.9	66.8	18.5
	7.0	6.0	73.0	15.8	72.4	16.4	71.7	17.1	71.4	17.4	71.1	17.7	70.5	18.3	69.8	18.9
	9.0	7.8	75.9	16.2	75.2	16.8	74.5	17.4	74.2	17.7	73.9	18.0	73.2	18.6	70.6	18.4
	12.0	10.6	80.4	16.7	79.7	17.3	79.0	17.9	78.6	18.2	78.3	18.5	76.4	18.7	70.6	17.2
	15.0	13.5	85.3	17.3	84.5	17.9	83.7	18.5	83.3	18.8	82.3	18.9	76.4	17.4	70.6	16.0
81.9 (130%)	-19.3	-20.0	37.7	10.8	37.5	11.5	37.4	12.2	37.3	12.5	37.2	12.9	37.0	13.6	36.9	14.2
	-15.0	-16.0	41.9	11.8	41.7	12.5	41.5	13.1	41.4	13.4	41.3	13.8	41.1	14.4	40.8	15.1
	-12.0	-13.0	45.4	12.5	45.2	13.1	44.9	13.8	44.8	14.1	44.7	14.4	44.4	15.0	44.1	15.7
	-9.0	-10.0	49.2	13.2	48.9	13.8	48.6	14.4	48.4	14.7	48.3	15.0	48.0	15.7	47.6	16.3
	-7.0	-8.0	51.8	13.6	51.5	14.2	51.2	14.8	51.0	15.1	50.8	15.4	50.4	16.0	50.1	16.7
	-5.0	-6.0	54.6	14.0	54.2	14.6	53.8	15.2	53.6	15.5	53.4	15.8	53.0	16.4	52.6	17.0
	-3.0	-4.0	57.4	14.4	57.0	15.0	56.5	15.6	56.3	15.9	56.1	16.2	55.7	16.8	55.2	17.4
	-1.0	-2.0	60.3	14.8	59.8	15.4	59.3	16.0	59.1	16.3	58.9	16.6	58.4	17.2	57.9	17.8
	0.0	-1.0	61.7	15.0	61.2	15.6	60.8	16.2	60.5	16.5	60.3	16.8	59.8	17.4	59.3	18.0
	2.0	1.0	64.7	15.4	64.2	16.0	63.7	16.6	63.4	16.9	63.1	17.2	62.6	17.8	62.1	18.4
	5.0	4.0	69.3	16.0	68.7	16.6	68.1	17.2	67.8	17.5	67.5	17.8	66.9	18.4	65.5	18.6
	7.0	6.0	72.4	16.4	71.8	17.0	71.1	17.6	70.8	17.9	70.5	18.2	69.9	18.8	65.5	17.7
	9.0	7.8	75.2	16.8	74.6	17.4	73.9	18.0	73.6	18.3	73.2	18.6	71.0	18.5	65.5	17.0
	12.0	10.6	79.7	17.4	79.0	18.0	78.2	18.6	77.9	18.9	76.4	18.7	71.0	17.3	65.5	15.9
	15.0	13.5	84.4	18.0	83.6	18.6	81.9	18.8	79.2	18.1	76.4	17.4	71.0	16.1	65.5	14.8
75.6 (120%)	-19.3	-20.0	37.6	11.2	37.4	11.9	37.3	12.6	37.2	12.9	37.1	13.3	36.9	13.9	36.8	14.6
	-15.0	-16.0	41.8	12.2	41.6	12.9	41.4	13.5	41.3	13.9	41.1	14.2	40.9	14.8	40.7	15.5
	-12.0	-13.0	45.3	12.9	45.0	13.6	44.7	14.2	44.6	14.5	44.5	14.8	44.2	15.5	43.9	16.1
	-9.0	-10.0	49.0	13.6	48.7	14.3	48.4	14.9	48.2	15.2	48.0	15.5	47.7	16.1	47.4	16.7
	-7.0	-8.0	51.6	14.1	51.2	14.7	50.9	15.3	50.7	15.6	50.5	15.9	50.2	16.5	49.8	17.1
	-5.0	-6.0	54.3	14.5	53.9	15.1	53.5	15.7	53.3	16.0	53.1	16.3	52.7	16.9	52.3	17.5
	-3.0	-4.0	57.0	14.9	56.6	15.5	56.2	16.1	56.0	16.4	55.7	16.7	55.3	17.3	54.9	17.9
	-1.0	-2.0	59.8	15.4	59.4	16.0	58.9	16.6	58.7	16.9	58.5	17.2	58.0	17.7	57.5	18.3
	0.0	-1.0	61.3	15.6	60.8	16.2	60.3	16.8	60.1	17.1	59.8	17.4	59.3	18.0	58.8	18.5
	2.0	1.0	64.2	16.0	63.7	16.6	63.2	17.2	62.9	17.5	62.6	17.8	62.1	18.4	60.5	18.4
	5.0	4.0	68.7	16.6	68.1	17.2	67.5	17.8	67.2	18.1	66.9	18.4	65.5	18.6	60.5	17.1
	7.0	6.0	71.7	17.1	71.1	17.7	70.5	18.3	70.1	18.5	69.8	18.8	65.5	17.7	60.5	16.3
	9.0	7.8	74.5	17.5	73.8	18.1	73.1	18.6	72.8	18.9	70.6	18.4	65.5	17.0	60.5	15.6
	12.0	10.6	78.8	18.1	78.1	18.7	75.6	18.5	73.1	17.8	70.6	17.2	65.5	15.9	60.5	14.6
	15.0	13.5	83.4	18.7	80.6	18.5	75.6	17.2	73.1	16.6	70.6	16.0	65.5	14.8	60.5	13.6
69.3 (110%)	-19.3	-20.0	37.5	11.7	37.3	12.4	37.2	13.0	37.1	13.4	37.0	13.7	36.8	14.4	36.6	15.1
	-15.0	-16.0	41.6	12.7	41.4	13.4	41.2	14.0	41.1	14.3	41.0	14.7	40.8	15.3	40.5	15.9
	-12.0	-13.0	45.1	13.5	44.8	14.1	44.5	14.7	44.4	15.0	44.3	15.3	44.0	16.0	43.7	16.6
	-9.0	-10.0	48.7	14.2	48.4	14.8	48.1	15.4	47.9	15.7	47.8	16.0	47.4	16.6	47.1	17.2
	-7.0	-8.0	51.3	14.6	50.9	15.2	50.6	15.9	50.4	16.2	50.2	16.5	49.8	17.1	49.5	17.7
	-5.0	-6.0	53.9	15.1	53.5	15.7	53.1	16.3	52.9	16.6	52.7	16.9	52.3	17.5	51.9	18.1
	-3.0	-4.0	56.6	15.6	56.2	16.1	55.7	16.7	55.5	17.0	55.3	17.3	54.9	17.9	54.4	18.5
	-1.0	-2.0	59.3	16.0	58.9	16.6	58.4	17.2	58.2	17.5	58.0	17.8	57.5	18.4	55.4	18.1
	0.0	-1.0	60.8	16.2	60.3	16.8	59.8	17.4	59.5	17.7	59.3	18.0	58.8	18.6	55.4	17.7
	2.0	1.0	63.6	16.7	63.1	17.3	62.6	17.9	62.3	18.1	62.0	18.4	60.1	18.3	55.4	16.9
	5.0	4.0	68.0	17.4	67.4	17.9	66.8	18.5	66.5	18.8	64.7	18.4	60.1	17.0	55.4	15.7
	7.0	6.0	70.9	17.8	70.3	18.4	69.3	18.8	67.0	18.2	64.7	17.5	60.1	16.2	55.4	14.9
	9.0	7.8	73.6	18.2	72.9	18.8	69.3	18.0	67.0	17.4	64.7	16.8	60.1	15.5	55.4	14.3
	12.0	10.6	77.8	18.9	73.9	18.0	69.3	16.8	67.0	16.2	64.7	15.7	60.1	14.5	55.4	13.4
	15.0	13.5	78.5	18.0	73.9	16.8	69.3	15.7	67.0	15.2	64.7	14.6	60.1	13.6	55.4	12.5

TC : Total Capacity kW.

PI : Power Input kW (Compressor + Outdoor fan motor).

The data is based on the following conditions. Pipe length : 7.5 m; Height difference : 0 m.

MODEL SELECTION

■ MODELS : AJ*A90L + AJ*A90U

• CAPACITY : 56.0kW (20HP)

Total rated heating capacity of indoor unit	Outdoor temperature		Indoor temperature													
			16°CDB		18°CDB		20°CDB		21°CDB		22°CDB		24°CDB		26°CDB	
	(°CDB)	(°CWB)	TC	PI	TC	PI	TC	PI	TC	PI	TC	PI	TC	PI	TC	PI
	-19.3	-20.0	37.4	12.2	37.2	12.9	37.0	13.6	36.9	13.9	36.9	14.3	36.7	14.9	36.5	15.6
	-15.0	-16.0	41.4	13.3	41.2	13.9	41.0	14.6	40.9	14.9	40.8	15.2	40.6	15.9	40.3	16.5
	-12.0	-13.0	44.8	14.1	44.5	14.7	44.3	15.3	44.1	15.6	44.0	15.9	43.7	16.6	43.4	17.2
	-9.0	-10.0	48.4	14.8	48.1	15.4	47.8	16.0	47.6	16.3	47.4	16.6	47.1	17.2	46.8	17.9
	-7.0	-8.0	50.9	15.3	50.5	15.9	50.2	16.5	50.0	16.8	49.8	17.1	49.5	17.7	49.1	18.3
	-5.0	-6.0	53.4	15.8	53.1	16.4	52.7	17.0	52.5	17.3	52.3	17.6	51.9	18.2	50.4	18.1
63.0	-3.0	-4.0	56.1	16.3	55.7	16.9	55.2	17.4	55.0	17.7	54.8	18.0	54.4	18.6	50.4	17.3
	-1.0	-2.0	58.8	16.8	58.3	17.3	57.8	17.9	57.6	18.2	57.4	18.5	54.6	17.9	50.4	16.5
(100%)	0.0	-1.0	60.1	17.0	59.6	17.6	59.2	18.2	58.9	18.4	58.7	18.7	54.6	17.4	50.4	16.1
	2.0	1.0	62.9	17.5	62.4	18.1	61.8	18.6	60.9	18.6	58.8	17.9	54.6	16.6	50.4	15.3
	5.0	4.0	67.1	18.2	66.5	18.8	63.0	17.9	60.9	17.3	58.8	16.6	54.6	15.4	50.4	14.2
	7.0	6.0	70.0	18.7	67.2	18.2	63.0	17.0	60.9	16.4	58.8	15.9	54.6	14.7	50.4	13.6
	9.0	7.8	71.4	18.6	67.2	17.4	63.0	16.3	60.9	15.7	58.8	15.2	54.6	14.1	50.4	13.0
	12.0	10.6	71.4	17.4	67.2	16.3	63.0	15.2	60.9	14.7	58.8	14.2	54.6	13.2	50.4	12.2
	15.0	13.5	71.4	16.2	67.2	15.2	63.0	14.2	60.9	13.7	58.8	13.3	54.6	12.3	50.4	11.4
	-19.3	-20.0	37.2	12.9	37.0	13.6	36.9	14.2	36.8	14.6	36.7	14.9	36.5	15.6	36.3	16.2
	-15.0	-16.0	41.2	14.0	41.0	14.6	40.8	15.3	40.6	15.6	40.5	15.9	40.3	16.5	40.1	17.2
	-12.0	-13.0	44.5	14.8	44.2	15.4	44.0	16.0	43.8	16.3	43.7	16.7	43.4	17.3	43.1	17.9
	-9.0	-10.0	48.0	15.6	47.7	16.2	47.4	16.8	47.2	17.1	47.0	17.4	46.7	18.0	45.4	18.0
	-7.0	-8.0	50.4	16.1	50.1	16.7	49.7	17.3	49.5	17.6	49.3	17.9	49.0	18.5	45.4	17.1
	-5.0	-6.0	52.9	16.6	52.5	17.2	52.1	17.8	51.9	18.1	51.7	18.4	49.1	17.7	45.4	16.3
56.7	-3.0	-4.0	55.5	17.1	55.0	17.7	54.6	18.3	54.4	18.6	52.9	18.2	49.1	16.8	45.4	15.5
	-1.0	-2.0	58.1	17.7	57.6	18.2	56.7	18.6	54.8	17.9	52.9	17.3	49.1	16.0	45.4	14.8
(90%)	0.0	-1.0	59.4	17.9	58.9	18.5	56.7	18.1	54.8	17.5	52.9	16.9	49.1	15.7	45.4	14.5
	2.0	1.0	62.0	18.4	60.5	18.4	56.7	17.2	54.8	16.7	52.9	16.1	49.1	14.9	45.4	13.8
	5.0	4.0	64.3	18.2	60.5	17.1	56.7	16.0	54.8	15.5	52.9	14.9	49.1	13.9	45.4	12.8
	7.0	6.0	64.3	17.4	60.5	16.3	56.7	15.3	54.8	14.8	52.9	14.2	49.1	13.2	45.4	12.2
	9.0	7.8	64.3	16.6	60.5	15.6	56.7	14.6	54.8	14.1	52.9	13.6	49.1	12.7	45.4	11.7
	12.0	10.6	64.3	15.6	60.5	14.6	56.7	13.7	54.8	13.2	52.9	12.8	49.1	11.9	45.4	11.0
	15.0	13.5	64.3	14.5	60.5	13.6	56.7	12.8	54.8	12.4	52.9	11.9	49.1	11.1	45.4	10.3
	-19.3	-20.0	37.0	13.7	36.8	14.4	36.6	15.0	36.6	15.4	36.5	15.7	36.3	16.4	36.1	17.0
	-15.0	-16.0	40.9	14.9	40.7	15.5	40.5	16.1	40.3	16.4	40.2	16.8	40.0	17.4	39.8	18.0
	-12.0	-13.0	44.1	15.7	43.8	16.3	43.6	16.9	43.4	17.2	43.3	17.5	43.0	18.1	40.3	17.2
	-9.0	-10.0	47.5	16.5	47.2	17.1	46.8	17.7	46.7	18.0	46.5	18.3	43.7	17.3	40.3	16.0
	-7.0	-8.0	49.8	17.1	49.5	17.7	49.1	18.3	48.7	18.4	47.0	17.8	43.7	16.5	40.3	15.3
	-5.0	-6.0	52.2	17.6	51.8	18.2	50.4	18.1	48.7	17.5	47.0	16.9	43.7	15.7	40.3	14.5
50.4	-3.0	-4.0	54.7	18.2	53.8	18.5	50.4	17.3	48.7	16.7	47.0	16.1	43.7	15.0	40.3	13.8
	-1.0	-2.0	57.1	18.7	53.8	17.6	50.4	16.5	48.7	15.9	47.0	15.4	43.7	14.3	40.3	13.2
(80%)	0.0	-1.0	57.1	18.3	53.8	17.1	50.4	16.1	48.7	15.5	47.0	15.0	43.7	13.9	40.3	12.9
	2.0	1.0	57.1	17.4	53.8	16.3	50.4	15.3	48.7	14.8	47.0	14.3	43.7	13.3	40.3	12.3
	5.0	4.0	57.1	16.1	53.8	15.2	50.4	14.2	48.7	13.7	47.0	13.3	43.7	12.3	40.3	11.4
	7.0	6.0	57.1	15.4	53.8	14.5	50.4	13.6	48.7	13.1	47.0	12.7	43.7	11.8	40.3	10.9
	9.0	7.8	57.1	14.7	53.8	13.9	50.4	13.0	48.7	12.6	47.0	12.1	43.7	11.3	40.3	10.5
	12.0	10.6	57.1	13.8	53.8	13.0	50.4	12.2	48.7	11.8	47.0	11.4	43.7	10.6	40.3	9.80
	15.0	13.5	57.1	12.9	53.8	12.1	50.4	11.4	48.7	11.0	47.0	10.6	43.7	9.90	40.3	9.18
	-19.3	-20.0	36.7	14.8	36.6	15.4	36.4	16.1	36.3	16.4	36.2	16.7	36.0	17.4	35.3	17.6
	-15.0	-16.0	40.5	16.0	40.3	16.6	40.1	17.2	39.9	17.5	39.8	17.8	38.2	17.5	35.3	16.1
	-12.0	-13.0	43.6	16.8	43.3	17.4	43.1	18.0	42.6	18.1	41.2	17.5	38.2	16.3	35.3	15.1
	-9.0	-10.0	46.9	17.7	46.5	18.3	44.1	17.5	42.6	16.9	41.2	16.3	38.2	15.2	35.3	14.1
	-7.0	-8.0	49.1	18.3	47.0	17.8	44.1	16.7	42.6	16.1	41.2	15.6	38.2	14.5	35.3	13.4
	-5.0	-6.0	50.0	18.0	47.0	16.9	44.1	15.9	42.6	15.3	41.2	14.8	38.2	13.8	35.3	12.8
44.1	-3.0	-4.0	50.0	17.1	47.0	16.1	44.1	15.1	42.6	14.6	41.2	14.1	38.2	13.1	35.3	12.2
	-1.0	-2.0	50.0	16.3	47.0	15.4	44.1	14.4	42.6	13.9	41.2	13.5	38.2	12.5	35.3	11.6
(70%)	0.0	-1.0	50.0	15.9	47.0	15.0	44.1	14.1	42.6	13.6	41.2	13.1	38.2	12.2	35.3	11.3
	2.0	1.0	50.0	15.2	47.0	14.3	44.1	13.4	42.6	13.0	41.2	12.5	38.2	11.7	35.3	10.8
	5.0	4.0	50.0	14.1	47.0	13.3	44.1	12.5	42.6	12.1	41.2	11.7	38.2	10.9	35.3	10.1
	7.0	6.0	50.0	13.4	47.0	12.7	44.1	11.9	42.6	11.5	41.2	11.1	38.2	10.4	35.3	9.61
	9.0	7.8	50.0	12.9	47.0	12.1	44.1	11.4	42.6	11.0	41.2	10.7	38.2	9.93	35.3	9.22
	12.0	10.6	50.0	12.1	47.0	11.4	44.1	10.7	42.6	10.3	41.2	9.99	38.2	9.32	35.3	8.66
	15.0	13.5	50.0	11.3	47.0	10.6	44.1	9.99	42.6	9.67	41.2	9.36	38.2	8.73	35.3	8.12
	-19.3	-20.0	36.4	16.1	36.2	16.8	36.0	17.4	35.9	17.7	35.3	17.6	32.8	16.4	30.2	15.2
	-15.0	-16.0	40.0	17.4	39.8	18.0	37.8	17.3	36.5	16.7	35.3	16.1	32.8	15.0	30.2	13.9
	-12.0	-13.0	42.8	18.2	40.3	17.2	37.8	16.1	36.5	15.6	35.3	15.1	32.8	14.0	30.2	13.0
	-9.0	-10.0	42.8	17.0	40.3	16.0	37.8	15.0	36.5	14.5	35.3	14.1	32.8	13.1	30.2	12.1
	-7.0	-8.0	42.8	16.2	40.3	15.3	37.8	14.3	36.5	13.9	35.3	13.4	32.8	12.5	30.2	11.6
	-5.0	-6.0	42.8	15.4	40.3	14.5	37.8	13.6	36.5	13.2	35.3	12.8	32.8	11.9	30.2	11.0
37.8	-3.0	-4.0	42.8	14.7	40.3	13.8	37.8	13.0	36.5	12.6	35.3	12.2	32.8	11.3	30.2	10.5
	-1.0	-2.0	42.8	14.0	40.3	13.2	37.8	12.4	36.5	12.0	35.3	11.6	32.8	10.8	30.2	10.0
(60%)	0.0	-1.0	42.8	13.7	40.3	12.9	37.8	12.1	36.5	11.7	35.3	11.3	32.8	10.6	30.2	9.81
	2.0	1.0	42.8	13.0	40.3	12.3	37.8	11.5	36.5	11.2	35.3	10.8	32.8	10.1	30.2	9.36
	5.0	4.0	42.8	12.1	40.3	11.4	37.8	10.7	36.5	10.4	35.3	10.1	32.8	9.40	30.2	8.74
	7.0	6.0	42.8	11.6	40.3	10.9	37.8	10.3	36.5	9.93	35.3	9.61	32.8	8.97	30.2	8.35
	9.0	7.8	42.8	11.1	40.3	10.5	37.8	9.83	36.5	9.53	35.3	9.22	32.8	8.62	30.2	8.02
	12.0	10.6	42.8	10.4	40.3	9.80	37.8	9.22	36.5	8.94	35.3	8.66	32.8	8.09	30.2	7.54
	15.0	13.5	42.8	9.72	40.3	9.18	37.8	8.65	36.5	8.38	35.3	8.12	32.8	7.60	30.2	7.08
	-19.3	-20.0	35.7	17.8	33.6	16.8	31.5	15.8	30.5	15.3	29.4	14.8	27.3	13.8	25.2	12.8
	-15.0	-16.0	35.7	16.3	33.6	15.4	31.5	14.5	30.5	14.0	29.4	13.6	27.3	12.7	25.2	11.7
	-12.0	-13.0	35.7	15.3	33.6	14.4	31.5	13.5	30.5	13.1	29.4	12.7	27.3	11.8	25.2	11.0
	-9.0	-10.0	35.7	14.2	33.6	13.4	31.5	12.6	30.5	12.2	29.4	11.8	27.3	11.0	25.2	10.3
	-7.0	-8.0	35.7	13.6	33.6	12.8	31.5	12.0	30.5	11.7	29.4	11.3	27.3	10.5	25.2	9.78
	-5.0	-6.0	35.7	12.9	33.6	12.2	31.5	11.5	30.5	11.1	29.4	10.8	27.3	10.0	25.2	9.34
31.5	-3.0	-4.0	35.7	12.3	33.6	11.6	31.5	10.9	30.5	10.6	29.4	10.3	27.3	9.58	25.2	8.92
	-1.0	-2.0	35.7	11.7	33.6	11.1	31.5	10.4	30.5	10.1	29.4	9.78	27.3	9.15	25.2	8.51
(50%)	0.0	-1.0	35.7	11.5	33.6	10.8	31.5	10.2	30.5	9.87	29.4	9.56	27.3	8.94	25.2	8.32
	2.0	1.0	35.7	10.9	33.6	10.3	31.5	9.72	30.4	9.42	29.4	9.12	27.3	8.53	25.2	7.95
	5.0	4.0	35.7	10.2	33.6	9.62	31.5	9.07	30.4	8.79	29.4	8.52	27.3	7.97	25.2	7.43
	7.0	6.0	35.7	9.71	33.6	9.19	31.5	8.66	30.5	8.40	29.4	8.14	27.3	7.62	25.2	7.11
	9.0	7.8	35.7	9.32	33.6	8.82	31.5	8.32	30.5	8.07	29.4	7.82	27.3	7.33	25.2	6.84
	12.0	10.6	35.7	8.75	33.6	8.28	31.5	7.82	30.4	7.58	29.4	7.35	27.3	6.90	25.2	6.44
	15.0	13.5	35.7	8.21	33.6	7.77	31.5	7.34	30.4	7.13	29.4	6.91	27.3	6.49	25.2	6.07

TC : Total Capacity kW.

PI : Power Input kW (Compressor + Outdoor fan motor).

The data is based on the following conditions. Pipe length : 7.5 m; Height difference : 0 m.

MODEL SELECTION

■ MODELS : AJ*126L + AJ*A72U

• CAPACITY : 62.4kW (22HP)

Total rated heating capacity of indoor unit	Outdoor temperature		Indoor temperature													
			16°CDB		18°CDB		20°CDB		21°CDB		22°CDB		24°CDB		26°CDB	
	(°CDB)	(°CWB)	TC	PI	TC	PI	TC	PI	TC	PI	TC	PI	TC	PI	TC	PI
	-19.3	-20.0	42.0	11.9	41.9	12.8	41.8	13.6	41.7	14.0	41.7	14.4	41.5	15.2	41.4	16.0
	-15.0	-16.0	46.8	13.0	46.6	13.8	46.4	14.6	46.3	15.0	46.3	15.4	46.1	16.2	45.9	17.0
	-12.0	-13.0	50.7	13.8	50.5	14.6	50.3	15.3	50.2	15.7	50.1	16.1	49.8	16.9	49.6	17.6
	-9.0	-10.0	55.0	14.5	54.7	15.3	54.4	16.0	54.3	16.4	54.1	16.8	53.8	17.5	53.6	18.3
	-7.0	-8.0	57.9	15.0	57.6	15.7	57.3	16.5	57.2	16.9	57.0	17.2	56.7	18.0	56.3	18.7
	-5.0	-6.0	61.0	15.5	60.7	16.2	60.3	16.9	60.1	17.3	59.9	17.7	59.6	18.4	59.2	19.1
105	-3.0	-4.0	64.2	15.9	63.8	16.6	63.4	17.4	63.2	17.7	63.0	18.1	62.6	18.8	62.2	19.5
	-1.0	-2.0	67.5	16.3	67.0	17.0	66.6	17.8	66.4	18.1	66.1	18.5	65.7	19.2	65.2	19.9
(150%)	0.0	-1.0	69.1	16.5	68.7	17.3	68.2	18.0	68.0	18.3	67.7	18.7	67.2	19.4	66.8	20.1
	2.0	1.0	72.5	17.0	72.0	17.7	71.5	18.4	71.2	18.8	71.0	19.1	70.5	19.8	69.9	20.6
	5.0	4.0	77.7	17.6	77.1	18.3	76.6	19.0	76.3	19.4	76.0	19.7	75.4	20.5	74.8	21.2
	7.0	6.0	81.3	18.0	80.7	18.7	80.0	19.4	79.7	19.8	79.4	20.1	78.7	20.9	78.1	21.6
	9.0	7.8	84.5	18.3	83.9	19.1	83.2	19.8	82.8	20.2	82.5	20.5	81.8	21.3	81.1	22.0
	12.0	10.6	89.7	18.9	88.9	19.7	88.2	20.4	87.8	20.8	87.4	21.1	86.7	21.9	84.0	21.8
	15.0	13.5	95.1	19.5	94.3	20.3	93.5	21.0	93.0	21.4	92.6	21.8	91.0	22.2	84.0	20.3
	-19.3	-20.0	41.9	12.3	41.8	13.1	41.7	13.9	41.7	14.3	41.6	14.7	41.5	15.6	41.4	16.4
	-15.0	-16.0	46.7	13.4	46.5	14.2	46.3	15.0	46.3	15.4	46.2	15.8	46.0	16.5	45.8	17.3
	-12.0	-13.0	50.6	14.2	50.4	15.0	50.2	15.7	50.1	16.1	49.9	16.5	49.7	17.3	49.5	18.0
	-9.0	-10.0	54.8	15.0	54.5	15.7	54.3	16.5	54.1	16.8	54.0	17.2	53.7	17.9	53.4	18.7
	-7.0	-8.0	57.8	15.4	57.4	16.2	57.1	16.9	57.0	17.3	56.8	17.7	56.5	18.4	56.1	19.1
	-5.0	-6.0	60.8	15.9	60.4	16.6	60.1	17.4	59.9	17.7	59.7	18.1	59.3	18.8	59.0	19.6
98.0	-3.0	-4.0	63.9	16.4	63.5	17.1	63.1	17.8	62.9	18.2	62.7	18.5	62.3	19.3	61.9	20.0
	-1.0	-2.0	67.2	16.8	66.7	17.5	66.3	18.3	66.0	18.6	65.8	19.0	65.4	19.7	64.9	20.4
(140%)	0.0	-1.0	68.8	17.0	68.3	17.8	67.9	18.5	67.6	18.8	67.4	19.2	66.9	19.9	66.4	20.6
	2.0	1.0	72.1	17.5	71.6	18.2	71.1	18.9	70.9	19.3	70.6	19.6	70.1	20.3	69.5	21.1
	5.0	4.0	77.3	18.1	76.7	18.9	76.1	19.6	75.8	19.9	75.5	20.3	74.9	21.0	74.3	21.7
	7.0	6.0	80.8	18.6	80.1	19.3	79.5	20.0	79.2	20.4	78.9	20.7	78.2	21.5	77.6	22.2
	9.0	7.8	84.0	19.0	83.3	19.7	82.6	20.4	82.3	20.8	81.9	21.1	81.2	21.9	78.4	21.6
	12.0	10.6	89.0	19.6	88.3	20.3	87.5	21.0	87.1	21.4	86.8	21.8	84.9	22.0	78.4	20.2
	15.0	13.5	94.3	20.3	93.5	21.0	92.7	21.7	92.3	22.1	91.5	22.3	84.9	20.6	78.4	18.9
	-19.3	-20.0	41.9	12.7	41.8	13.5	41.7	14.3	41.6	14.7	41.5	15.1	41.4	16.0	41.3	16.8
	-15.0	-16.0	46.6	13.9	46.4	14.6	46.2	15.4	46.2	15.8	46.1	16.2	45.9	17.0	45.7	17.7
	-12.0	-13.0	50.5	14.7	50.3	15.4	50.0	16.2	49.9	16.6	49.8	16.9	49.6	17.7	49.3	18.5
	-9.0	-10.0	54.6	15.4	54.4	16.2	54.1	16.9	53.9	17.3	53.8	17.7	53.5	18.4	53.2	19.1
	-7.0	-8.0	57.5	15.9	57.2	16.7	56.9	17.4	56.7	17.8	56.6	18.1	56.2	18.9	55.9	19.6
	-5.0	-6.0	60.5	16.4	60.2	17.2	59.8	17.9	59.6	18.2	59.5	18.6	59.1	19.3	58.7	20.1
91.0	-3.0	-4.0	63.6	16.9	63.2	17.6	62.8	18.4	62.6	18.7	62.4	19.1	62.0	19.8	61.6	20.5
	-1.0	-2.0	66.8	17.4	66.4	18.1	65.9	18.8	65.7	19.2	65.5	19.5	65.0	20.2	64.5	21.0
(130%)	0.0	-1.0	68.4	17.6	68.0	18.3	67.5	19.1	67.3	19.4	67.0	19.8	66.5	20.5	66.0	21.2
	2.0	1.0	71.7	18.1	71.2	18.8	70.7	19.5	70.4	19.9	70.2	20.2	69.6	20.9	69.1	21.6
	5.0	4.0	76.7	18.8	76.2	19.5	75.6	20.2	75.3	20.6	75.0	20.9	74.4	21.6	72.8	21.9
	7.0	6.0	80.2	19.3	79.6	20.0	78.9	20.7	78.6	21.0	78.3	21.4	77.6	22.1	72.8	20.8
	9.0	7.8	83.3	19.7	82.6	20.4	82.0	21.1	81.6	21.5	81.3	21.8	78.9	21.7	72.8	20.0
	12.0	10.6	88.2	20.3	87.5	21.1	86.8	21.8	86.4	22.2	84.9	22.0	78.9	20.3	72.8	18.7
	15.0	13.5	93.4	21.1	92.6	21.8	91.0	22.2	88.0	21.4	84.9	20.6	78.9	19.0	72.8	17.5
	-19.3	-20.0	41.8	13.2	41.7	14.0	41.6	14.8	41.5	15.2	41.5	15.6	41.4	16.4	41.2	17.2
	-15.0	-16.0	46.5	14.4	46.3	15.1	46.1	15.9	46.0	16.3	46.0	16.7	45.8	17.5	45.6	18.2
	-12.0	-13.0	50.3	15.2	50.1	15.9	49.9	16.7	49.8	17.1	49.6	17.5	49.4	18.2	49.2	19.0
	-9.0	-10.0	54.4	16.0	54.2	16.7	53.9	17.5	53.7	17.8	53.6	18.2	53.3	18.9	53.0	19.7
	-7.0	-8.0	57.3	16.5	57.0	17.3	56.7	18.0	56.5	18.3	56.3	18.7	56.0	19.4	55.6	20.2
	-5.0	-6.0	60.3	17.0	59.9	17.8	59.5	18.5	59.3	18.8	59.2	19.2	58.8	19.9	58.4	20.6
84.0	-3.0	-4.0	63.3	17.5	62.9	18.3	62.5	19.0	62.3	19.3	62.1	19.7	61.7	20.4	61.2	21.1
	-1.0	-2.0	66.4	18.0	66.0	18.8	65.5	19.5	65.3	19.8	65.1	20.2	64.6	20.9	64.1	21.6
(120%)	0.0	-1.0	68.0	18.3	67.5	19.0	67.1	19.7	66.8	20.1	66.6	20.4	66.1	21.1	65.6	21.8
	2.0	1.0	71.2	18.8	70.7	19.5	70.2	20.2	69.9	20.6	69.7	20.9	69.1	21.6	67.2	21.6
	5.0	4.0	76.1	19.5	75.6	20.2	75.0	20.9	74.7	21.3	74.4	21.7	72.8	21.9	67.2	20.1
	7.0	6.0	79.5	20.0	78.9	20.7	78.2	21.4	77.9	21.8	77.6	22.2	72.8	20.8	67.2	19.2
	9.0	7.8	82.5	20.5	81.9	21.2	81.2	21.9	80.9	22.3	78.4	21.6	72.8	20.0	67.2	18.4
	12.0	10.6	87.3	21.2	86.6	21.9	84.0	21.8	81.2	21.0	78.4	20.2	72.8	18.7	67.2	17.2
	15.0	13.5	92.4	22.0	89.6	21.8	84.0	20.3	81.2	19.6	78.4	18.9	72.8	17.5	67.2	16.1
	-19.3	-20.0	41.7	13.7	41.6	14.5	41.5	15.3	41.5	15.7	41.4	16.2	41.3	17.0	41.1	17.8
	-15.0	-16.0	46.4	14.9	46.2	15.7	46.0	16.5	45.9	16.9	45.8	17.3	45.6	18.0	45.4	18.8
	-12.0	-13.0	50.1	15.8	49.9	16.6	49.7	17.3	49.6	17.7	49.5	18.1	49.2	18.8	49.0	19.6
	-9.0	-10.0	54.2	16.6	53.9	17.4	53.6	18.1	53.5	18.5	53.3	18.9	53.0	19.6	52.7	20.3
	-7.0	-8.0	57.0	17.2	56.7	17.9	56.4	18.6	56.2	19.0	56.0	19.4	55.7	20.1	55.3	20.8
	-5.0	-6.0	59.9	17.7	59.5	18.5	59.2	19.2	59.0	19.5	58.8	19.9	58.4	20.6	58.0	21.3
77.0	-3.0	-4.0	62.9	18.3	62.5	19.0	62.1	19.7	61.9	20.0	61.7	20.4	61.2	21.1	60.8	21.8
	-1.0	-2.0	65.9	18.8	65.5	19.5	65.0	20.2	64.8	20.6	64.6	20.9	64.1	21.6	61.6	21.2
(110%)	0.0	-1.0	67.5	19.1	67.0	19.8	66.5	20.5	66.3	20.8	66.1	21.2	65.6	21.9	61.6	20.7
	2.0	1.0	70.6	19.6	70.1	20.3	69.6	21.0	69.3	21.3	69.1	21.7	66.7	21.4	61.6	19.7
	5.0	4.0	75.4	20.4	74.8	21.1	74.3	21.8	74.0	22.1	71.9	21.6	66.7	20.0	61.6	18.4
	7.0	6.0	78.7	20.9	78.1	21.6	77.0	22.1	74.4	21.3	71.9	20.6	66.7	19.0	61.6	17.5
	9.0	7.8	81.7	21.4	81.0	22.1	77.0	21.2	74.4	20.4	71.9	19.7	66.7	18.2	61.6	16.8
	12.0	10.6	86.3	22.2	82.1	21.3	77.0	19.8	74.4	19.1	71.9	18.4	66.7	17.1	61.6	15.7
	15.0	13.5	87.3	21.2	82.1	19.9	77.0	18.5	74.4	17.9	71.9	17.2	66.7	16.0	61.6	14.7

TC : Total Capacity kW.

PI : Power Input kW (Compressor + Outdoor fan motor).

The data is based on the following conditions. Pipe length : 7.5 m; Height difference : 0 m.

MODEL SELECTION

■ MODELS : AJ*126L + AJ*A72U

• CAPACITY : 62.4kW (22HP)

Total rated heating capacity of indoor unit	Outdoor temperature		Indoor temperature													
			16°CDB		18°CDB		20°CDB		21°CDB		22°CDB		24°CDB		26°CDB	
	(°CDB)	(°CWB)	TC	PI	TC	PI	TC	PI	TC	PI	TC	PI	TC	PI	TC	PI
	-19.3	-20.0	41.7	14.4	41.5	15.2	41.4	16.0	41.4	16.4	41.3	16.8	41.2	17.6	41.0	18.4
	-15.0	-16.0	46.2	15.6	46.0	16.4	45.8	17.2	45.7	17.6	45.7	17.9	45.5	18.7	45.3	19.5
	-12.0	-13.0	49.9	16.5	49.7	17.3	49.5	18.0	49.3	18.4	49.2	18.8	49.0	19.5	48.7	20.3
	-9.0	-10.0	53.9	17.4	53.6	18.2	53.3	18.9	53.2	19.2	53.0	19.6	52.7	20.3	52.4	21.1
	-7.0	-8.0	56.6	18.0	56.3	18.7	56.0	19.4	55.8	19.8	55.7	20.2	55.3	20.9	55.0	21.6
	-5.0	-6.0	59.5	18.6	59.1	19.3	58.7	20.0	58.6	20.3	58.4	20.7	58.0	21.4	56.0	21.2
70.0	-3.0	-4.0	62.4	19.1	62.0	19.8	61.6	20.5	61.4	20.9	61.1	21.2	60.5	21.8	56.0	20.2
	-1.0	-2.0	65.4	19.7	64.9	20.4	64.5	21.1	64.2	21.4	64.0	21.8	60.7	20.9	56.0	19.2
(100%)	0.0	-1.0	66.9	20.0	66.4	20.7	65.9	21.4	65.7	21.7	65.3	22.0	60.7	20.4	56.0	18.8
	2.0	1.0	69.9	20.6	69.4	21.2	68.9	21.9	67.7	21.8	65.3	21.0	60.7	19.4	56.0	17.9
	5.0	4.0	74.6	21.4	74.0	22.1	70.0	21.0	67.7	20.3	65.3	19.5	60.7	18.1	56.0	16.7
	7.0	6.0	77.7	22.0	74.7	21.4	70.0	20.0	67.7	19.3	65.3	18.6	60.7	17.3	56.0	15.9
	9.0	7.8	79.3	21.9	74.7	20.5	70.0	19.2	67.7	18.5	65.3	17.8	60.7	16.5	56.0	15.3
	12.0	10.6	79.3	20.5	74.7	19.2	70.0	17.9	67.7	17.3	65.3	16.7	60.7	15.5	56.0	14.3
	15.0	13.5	79.3	19.1	74.7	17.9	70.0	16.8	67.7	16.2	65.3	15.6	60.7	14.5	56.0	13.4
	-19.3	-20.0	41.5	15.2	41.4	16.0	41.3	16.8	41.2	17.2	41.2	17.6	41.0	18.4	40.9	19.2
	-15.0	-16.0	46.0	16.5	45.8	17.2	45.6	18.0	45.5	18.4	45.4	18.8	45.3	19.5	45.1	20.3
	-12.0	-13.0	49.7	17.4	49.4	18.2	49.2	18.9	49.1	19.3	48.9	19.6	48.7	20.4	48.4	21.1
	-9.0	-10.0	53.5	18.4	53.2	19.1	52.9	19.8	52.8	20.2	52.6	20.5	52.3	21.2	50.4	20.9
	-7.0	-8.0	56.2	19.0	55.9	19.7	55.5	20.4	55.4	20.7	55.2	21.1	54.5	21.6	50.4	20.0
	-5.0	-6.0	59.0	19.6	58.6	20.3	58.2	21.0	58.0	21.3	57.8	21.7	54.6	20.6	50.4	19.0
63.0	-3.0	-4.0	61.8	20.2	61.4	20.9	61.0	21.6	60.7	21.9	58.8	21.2	54.6	19.7	50.4	18.2
	-1.0	-2.0	64.7	20.8	64.2	21.5	63.0	21.7	60.9	21.0	58.8	20.2	54.6	18.8	50.4	17.3
(90%)	0.0	-1.0	66.1	21.1	65.6	21.8	63.0	21.2	60.9	20.5	58.8	19.7	54.6	18.3	50.4	16.9
	2.0	1.0	69.1	21.7	67.2	21.6	63.0	20.2	60.9	19.5	58.8	18.8	54.6	17.5	50.4	16.1
	5.0	4.0	71.4	21.4	67.2	20.1	63.0	18.8	60.9	18.2	58.8	17.5	54.6	16.3	50.4	15.0
	7.0	6.0	71.4	20.4	67.2	19.2	63.0	17.9	60.9	17.3	58.8	16.7	54.6	15.5	50.4	14.3
	9.0	7.8	71.4	19.6	67.2	18.4	63.0	17.2	60.9	16.6	58.8	16.0	54.6	14.9	50.4	13.7
	12.0	10.6	71.4	18.3	67.2	17.2	63.0	16.1	60.9	15.6	58.8	15.0	54.6	13.9	50.4	12.9
	15.0	13.5	71.4	17.1	67.2	16.1	63.0	15.1	60.9	14.5	58.8	14.0	54.6	13.0	50.4	12.1
	-19.3	-20.0	41.4	16.2	41.3	17.0	41.1	17.8	41.1	18.2	41.0	18.6	40.9	19.4	40.8	20.1
	-15.0	-16.0	45.8	17.5	45.6	18.3	45.4	19.0	45.3	19.4	45.2	19.8	45.0	20.6	44.5	21.1
	-12.0	-13.0	49.3	18.5	49.1	19.3	48.8	20.0	48.7	20.4	48.6	20.7	48.2	21.4	44.8	19.9
	-9.0	-10.0	53.1	19.5	52.8	20.2	52.5	20.9	52.3	21.3	52.0	21.5	48.5	20.1	44.8	18.6
	-7.0	-8.0	55.7	20.1	55.3	20.8	55.0	21.5	54.1	21.4	52.3	20.7	48.5	19.2	44.8	17.8
	-5.0	-6.0	58.3	20.8	57.9	21.5	56.0	21.2	54.1	20.5	52.3	19.7	48.5	18.3	44.8	16.9
56.0	-3.0	-4.0	61.0	21.4	59.7	21.6	56.0	20.2	54.1	19.5	52.3	18.8	48.5	17.5	44.8	16.2
	-1.0	-2.0	63.5	21.9	59.7	20.6	56.0	19.2	54.1	18.6	52.3	18.0	48.5	16.7	44.8	15.4
(80%)	0.0	-1.0	63.5	21.4	59.7	20.1	56.0	18.8	54.1	18.2	52.3	17.5	48.5	16.3	44.8	15.1
	2.0	1.0	63.5	20.4	59.7	19.1	56.0	17.9	54.1	17.3	52.3	16.7	48.5	15.5	44.8	14.4
	5.0	4.0	63.5	19.0	59.7	17.8	56.0	16.7	54.1	16.1	52.3	15.6	48.5	14.5	44.8	13.4
	7.0	6.0	63.5	18.1	59.7	17.0	56.0	15.9	54.1	15.4	52.3	14.9	48.5	13.8	44.8	12.8
	9.0	7.8	63.5	17.3	59.7	16.3	56.0	15.3	54.1	14.7	52.3	14.2	48.5	13.2	44.8	12.3
	12.0	10.6	63.5	16.2	59.7	15.3	56.0	14.3	54.1	13.8	52.3	13.4	48.5	12.4	44.8	11.5
	15.0	13.5	63.5	15.2	59.7	14.3	56.0	13.4	54.1	12.9	52.3	12.5	48.5	11.6	44.8	10.8
	-19.3	-20.0	41.2	17.4	41.1	18.2	40.9	19.0	40.9	19.4	40.8	19.8	40.7	20.6	39.2	20.3
	-15.0	-16.0	45.4	18.8	45.2	19.6	45.0	20.3	45.0	20.7	44.9	21.1	42.5	20.2	39.2	18.7
	-12.0	-13.0	48.9	19.9	48.6	20.6	48.4	21.3	47.4	21.1	45.7	20.3	42.5	18.9	39.2	17.5
	-9.0	-10.0	52.5	20.9	52.0	21.5	49.0	20.3	47.4	19.7	45.7	19.0	42.5	17.7	39.2	16.3
	-7.0	-8.0	55.0	21.6	52.3	20.7	49.0	19.4	47.4	18.8	45.7	18.1	42.5	16.9	39.2	15.6
	-5.0	-6.0	55.5	21.0	52.3	19.7	49.0	18.5	47.4	17.9	45.7	17.3	42.5	16.1	39.2	14.9
49.0	-3.0	-4.0	55.5	20.0	52.3	18.8	49.0	17.7	47.4	17.1	45.7	16.5	42.5	15.3	39.2	14.2
	-1.0	-2.0	55.5	19.1	52.3	18.0	49.0	16.8	47.4	16.3	45.7	15.7	42.5	14.6	39.2	13.5
(70%)	0.0	-1.0	55.5	18.6	52.3	17.5	49.0	16.4	47.4	15.9	45.7	15.4	42.5	14.3	39.2	13.2
	2.0	1.0	55.5	17.8	52.3	16.7	49.0	15.7	47.4	15.2	45.7	14.7	42.5	13.6	39.2	12.6
	5.0	4.0	55.5	16.5	52.3	15.6	49.0	14.6	47.4	14.1	45.7	13.7	42.5	12.7	39.2	11.8
	7.0	6.0	55.5	15.8	52.3	14.9	49.0	13.9	47.4	13.5	45.7	13.0	42.5	12.1	39.2	11.3
	9.0	7.8	55.5	15.1	52.3	14.2	49.0	13.4	47.4	12.9	45.7	12.5	42.5	11.7	39.2	10.8
	12.0	10.6	55.5	14.2	52.3	13.4	49.0	12.5	47.4	12.1	45.7	11.7	42.5	10.9	39.2	10.2
	15.0	13.5	55.5	13.3	52.3	12.5	49.0	11.7	47.4	11.4	45.7	11.0	42.5	10.3	39.2	9.52
	-19.3	-20.0	40.9	19.1	40.8	19.9	40.7	20.6	40.3	20.8	39.2	20.3	36.4	18.9	33.6	17.5
	-15.0	-16.0	45.0	20.6	44.5	21.1	42.0	20.0	40.6	19.3	39.2	18.7	36.4	17.4	33.6	16.1
	-12.0	-13.0	47.6	21.1	44.8	19.9	42.0	18.7	40.6	18.1	39.2	17.5	36.4	16.3	33.6	15.1
	-9.0	-10.0	47.6	19.8	44.8	18.6	42.0	17.5	40.6	16.9	39.2	16.3	36.4	15.2	33.6	14.1
	-7.0	-8.0	47.6	18.9	44.8	17.8	42.0	16.7	40.6	16.1	39.2	15.6	36.4	14.5	33.6	13.5
	-5.0	-6.0	47.6	18.0	44.8	16.9	42.0	15.9	40.6	15.4	39.2	14.9	36.4	13.9	33.6	12.9
42.0	-3.0	-4.0	47.6	17.2	44.8	16.2	42.0	15.2	40.6	14.7	39.2	14.2	36.4	13.2	33.6	12.3
	-1.0	-2.0	47.6	16.4	44.8	15.4	42.0	14.5	40.6	14.0	39.2	13.5	36.4	12.6	33.6	11.7
(60%)	0.0	-1.0	47.6	16.0	44.8	15.1	42.0	14.1	40.6	13.7	39.2	13.2	36.4	12.3	33.6	11.4
	2.0	1.0	47.6	15.2	44.8	14.4	42.0	13.5	40.6	13.1	39.2	12.6	36.4	11.8	33.6	10.9
	5.0	4.0	47.6	14.2	44.8	13.4	42.0	12.6	40.6	12.2	39.2	11.8	36.4	11.0	33.6	10.2
	7.0	6.0	47.6	13.6	44.8	12.8	42.0	12.0	40.6	11.6	39.2	11.3	36.4	10.5	33.6	9.76
	9.0	7.8	47.6	13.0	44.8	12.3	42.0	11.5	40.6	11.2	39.2	10.8	36.4	10.1	33.6	9.38
	12.0	10.6	47.6	12.2	44.8	11.5	42.0	10.8	40.6	10.5	39.2	10.2	36.4	9.48	33.6	8.82
	15.0	13.5	47.6	11.4	44.8	10.8	42.0	10.2	40.6	9.84	39.2	9.52	36.4	8.90	33.6	8.29
	-19.3	-20.0	39.7	20.5	37.3	19.4	35.0	18.2	33.8	17.6	32.7	17.1	30.3	15.9	28.0	14.8
	-15.0	-16.0	39.7	18.9	37.3	17.8	35.0	16.8	33.8	16.2	32.7	15.7	30.3	14.6	28.0	13.6
	-12.0	-13.0	39.7	17.7	37.3	16.7	35.0	15.7	33.8	15.2	32.7	14.7	30.3	13.7	28.0	12.7
	-9.0	-10.0	39.7	16.5	37.3	15.6	35.0	14.7	33.8	14.2	32.7	13.7	30.3	12.8	28.0	11.9
	-7.0	-8.0	39.7	15.8	37.3	14.9	35.0	14.0	33.8	13.6	32.7	13.1	30.3	12.2	28.0	11.4
	-5.0	-6.0	39.7	15.1	37.3	14.2	35.0	13.4	33.8	12.9	32.7	12.5	30.3	11.7	28.0	10.9
35.0	-3.0	-4.0	39.7	14.4	37.3	13.6	35.0	12.7	33.8	12.4	32.7	12.0	30.3	11.2	28.0	10.4
	-1.0	-2.0	39.7	13.7	37.3	12.9	35.0	12.2	33.8	11.8	32.7	11.4	30.3	10.7	28.0	9.91
(50%)	0.0	-1.0	39.7	13.4	37.3	12.6	35.0	11.9	33.8	11.5	32.7	11.2	30.3	10.4	28.0	9.69
	2.0	1.0	39.7	12.8	37.3	12.1	35.0	11.4	33.8	11.0	32.7	10.7	30.3	9.96	28.0	9.27
	5.0	4.0	39.7	11.9	37.3	11.3	35.0	10.6	33.8	10.3	32.7	9.95	30.3	9.31	28.0	8.67
	7.0	6.0	39.7	11.4	37.3	10.8	35.0	10.1	33.8	9.82	32.7	9.52	30.3	8.91	28.0	8.30
	9.0	7.8	39.7	10.9	37.3	10.3	35.0	9.73	33.8	9.44	32.7	9.15	30.3	8.56	28.0	7.98
	12.0	10.6	39.7	10.3	37.3	9.70	35.0	9.15	33.8	8.88	32.7	8.60	30.3	8.06	28.0	7.52
	15.0	13.5	39.7	9.63	37.3	9.11	35.0	8.60	33.8	8.34	32.7	8.09	30.3	7.59	28.0	7.09

TC : Total Capacity kW.

PI : Power Input kW (Compressor + Outdoor fan motor).

The data is based on the following conditions. Pipe length : 7.5 m; Height difference : 0 m.

MODEL SELECTION

■ MODELS : AJ*126L + AJ*A90U

• CAPACITY : 68.0kW (24HP)

Total rated heating capacity of indoor unit	Outdoor temperature		Indoor temperature													
			16°CDB		18°CDB		20°CDB		21°CDB		22°CDB		24°CDB		26°CDB	
	(°CDB)	(°CWB)	TC	PI	TC	PI	TC	PI	TC	PI	TC	PI	TC	PI	TC	PI
	-19.3	-20.0	45.9	12.9	45.8	13.8	45.6	14.7	45.6	15.2	45.5	15.6	45.4	16.5	45.3	17.4
	-15.0	-16.0	51.1	14.1	50.9	15.0	50.7	15.9	50.6	16.3	50.5	16.7	50.4	17.6	50.2	18.4
	-12.0	-13.0	55.4	15.0	55.2	15.8	55.0	16.7	54.8	17.1	54.7	17.5	54.5	18.3	54.2	19.2
	-9.0	-10.0	60.1	15.8	59.8	16.6	59.5	17.4	59.3	17.8	59.2	18.2	58.8	19.1	58.5	19.9
	-7.0	-8.0	63.3	16.3	63.0	17.1	62.6	17.9	62.5	18.3	62.3	18.7	61.9	19.5	61.6	20.3
	-5.0	-6.0	66.7	16.8	66.3	17.6	65.9	18.4	65.7	18.8	65.5	19.2	65.1	20.0	64.7	20.8
114	-3.0	-4.0	70.2	17.3	69.7	18.1	69.3	18.9	69.1	19.2	68.8	19.6	68.4	20.4	67.9	21.2
	-1.0	-2.0	73.7	17.7	73.2	18.5	72.8	19.3	72.5	19.7	72.3	20.1	71.8	20.9	71.3	21.7
(150%)	0.0	-1.0	75.5	18.0	75.0	18.7	74.5	19.5	74.3	19.9	74.0	20.3	73.5	21.1	73.0	21.9
	2.0	1.0	79.2	18.4	78.7	19.2	78.1	20.0	77.8	20.4	77.6	20.8	77.0	21.6	76.4	22.4
	5.0	4.0	84.9	19.1	84.3	19.9	83.7	20.7	83.4	21.1	83.0	21.5	82.4	22.2	81.7	23.0
	7.0	6.0	88.8	19.5	88.1	20.3	87.5	21.1	87.1	21.5	86.8	21.9	86.1	22.7	85.3	23.5
	9.0	7.8	92.4	19.9	91.6	20.7	90.9	21.5	90.5	21.9	90.2	22.3	89.4	23.1	88.7	23.9
	12.0	10.6	98.0	20.6	97.2	21.4	96.4	22.2	96.0	22.6	95.6	23.0	94.7	23.8	91.8	23.7
	15.0	13.5	103	21.2	103	22.1	102	22.9	101	23.3	101	23.7	99.5	24.1	91.8	22.1
	-19.3	-20.0	45.8	13.3	45.7	14.2	45.6	15.1	45.5	15.6	45.5	16.0	45.3	16.9	45.2	17.8
	-15.0	-16.0	51.0	14.6	50.8	15.4	50.7	16.3	50.6	16.7	50.5	17.1	50.3	18.0	50.1	18.8
	-12.0	-13.0	55.3	15.4	55.1	16.3	54.8	17.1	54.7	17.5	54.6	17.9	54.3	18.7	54.1	19.6
	-9.0	-10.0	59.9	16.2	59.6	17.1	59.3	17.9	59.1	18.3	59.0	18.7	58.7	19.5	58.4	20.3
	-7.0	-8.0	63.1	16.8	62.8	17.6	62.4	18.4	62.3	18.8	62.1	19.2	61.7	20.0	61.4	20.8
	-5.0	-6.0	66.4	17.3	66.1	18.1	65.7	18.9	65.5	19.3	65.3	19.7	64.9	20.5	64.5	21.3
107	-3.0	-4.0	69.9	17.8	69.4	18.6	69.0	19.4	68.8	19.8	68.6	20.2	68.1	20.9	67.6	21.7
	-1.0	-2.0	73.4	18.3	72.9	19.1	72.4	19.8	72.2	20.2	71.9	20.6	71.4	21.4	70.9	22.2
(140%)	0.0	-1.0	75.2	18.5	74.7	19.3	74.2	20.1	73.9	20.5	73.7	20.9	73.1	21.7	72.6	22.4
	2.0	1.0	78.8	19.0	78.3	19.8	77.7	20.6	77.4	21.0	77.2	21.3	76.6	22.1	76.0	22.9
	5.0	4.0	84.4	19.7	83.8	20.5	83.2	21.3	82.9	21.7	82.5	22.1	81.9	22.9	81.2	23.6
	7.0	6.0	88.3	20.2	87.6	21.0	86.9	21.8	86.5	22.2	86.2	22.5	85.5	23.3	84.8	24.1
	9.0	7.8	91.7	20.6	91.0	21.4	90.3	22.2	89.9	22.6	89.5	23.0	88.8	23.8	85.7	23.5
	12.0	10.6	97.2	21.3	96.4	22.1	95.6	22.9	95.2	23.3	94.8	23.7	92.8	24.0	85.7	22.0
	15.0	13.5	103	22.0	102	22.8	101	23.6	100	24.0	100	24.3	92.8	22.4	85.7	20.5
	-19.3	-20.0	45.8	13.8	45.7	14.7	45.5	15.5	45.5	16.0	45.4	16.4	45.3	17.3	45.1	18.2
	-15.0	-16.0	50.9	15.0	50.7	15.9	50.5	16.7	50.4	17.2	50.4	17.6	50.2	18.4	50.0	19.3
	-12.0	-13.0	55.2	15.9	54.9	16.7	54.7	17.6	54.6	18.0	54.4	18.4	54.2	19.2	53.9	20.1
	-9.0	-10.0	59.7	16.8	59.4	17.6	59.1	18.4	58.9	18.8	58.8	19.2	58.5	20.0	58.1	20.8
	-7.0	-8.0	62.9	17.3	62.5	18.1	62.2	18.9	62.0	19.3	61.8	19.7	61.5	20.5	61.1	21.3
	-5.0	-6.0	66.2	17.8	65.8	18.6	65.4	19.4	65.2	19.8	65.0	20.2	64.6	21.0	64.2	21.8
99.5	-3.0	-4.0	69.5	18.4	69.1	19.2	68.7	19.9	68.4	20.3	68.2	20.7	67.8	21.5	67.3	22.3
	-1.0	-2.0	73.0	18.9	72.5	19.7	72.0	20.5	71.8	20.8	71.5	21.2	71.0	22.0	70.5	22.8
(130%)	0.0	-1.0	74.8	19.1	74.3	19.9	73.8	20.7	73.5	21.1	73.2	21.5	72.7	22.3	72.2	23.1
	2.0	1.0	78.4	19.7	77.8	20.4	77.2	21.2	77.0	21.6	76.7	22.0	76.1	22.8	75.5	23.6
	5.0	4.0	83.9	20.4	83.2	21.2	82.6	22.0	82.3	22.4	82.0	22.8	81.3	23.5	79.6	23.8
	7.0	6.0	87.6	20.9	86.9	21.7	86.2	22.5	85.9	22.9	85.5	23.3	84.8	24.1	79.6	22.7
	9.0	7.8	91.0	21.4	90.3	22.2	89.6	23.0	89.2	23.4	88.8	23.7	86.2	23.7	79.6	21.7
	12.0	10.6	96.4	22.1	95.6	22.9	94.8	23.7	94.4	24.1	92.8	24.0	86.2	22.1	79.6	20.3
	15.0	13.5	102	22.9	101	23.7	99.5	24.1	96.1	23.3	92.8	22.4	86.2	20.7	79.6	19.0
	-19.3	-20.0	45.7	14.3	45.6	15.2	45.5	16.1	45.4	16.5	45.3	16.9	45.2	17.8	45.1	18.7
	-15.0	-16.0	50.8	15.6	50.6	16.4	50.4	17.3	50.3	17.7	50.2	18.1	50.0	19.0	49.8	19.8
	-12.0	-13.0	55.0	16.5	54.8	17.3	54.5	18.1	54.4	18.6	54.3	19.0	54.0	19.8	53.7	20.6
	-9.0	-10.0	59.5	17.4	59.2	18.2	58.9	19.0	58.7	19.4	58.6	19.8	58.2	20.6	57.9	21.4
	-7.0	-8.0	62.6	17.9	62.3	18.7	61.9	19.5	61.7	19.9	61.6	20.3	61.2	21.1	60.8	21.9
	-5.0	-6.0	65.8	18.5	65.5	19.3	65.1	20.1	64.9	20.5	64.7	20.9	64.2	21.7	63.8	22.4
91.8	-3.0	-4.0	69.2	19.1	68.7	19.8	68.3	20.6	68.1	21.0	67.8	21.4	67.4	22.2	66.9	23.0
	-1.0	-2.0	72.6	19.6	72.1	20.4	71.6	21.2	71.4	21.6	71.1	21.9	70.6	22.7	70.1	23.5
(120%)	0.0	-1.0	74.3	19.9	73.8	20.7	73.3	21.4	73.0	21.8	72.8	22.2	72.2	23.0	71.7	23.8
	2.0	1.0	77.8	20.4	77.3	21.2	76.7	22.0	76.4	22.4	76.1	22.7	75.5	23.5	73.4	23.5
	5.0	4.0	83.2	21.2	82.6	22.0	81.9	22.8	81.6	23.2	81.3	23.6	79.6	23.8	73.4	21.9
	7.0	6.0	86.9	21.8	86.2	22.6	85.5	23.3	85.1	23.7	84.8	24.1	79.6	22.7	73.4	20.8
	9.0	7.8	90.2	22.3	89.5	23.1	88.7	23.8	88.4	24.2	85.7	23.5	79.6	21.7	73.4	20.0
	12.0	10.6	95.5	23.1	94.6	23.9	91.8	23.7	88.7	22.8	85.7	22.0	79.6	20.3	73.4	18.7
	15.0	13.5	100	23.9	97.9	23.7	91.8	22.1	88.7	21.3	85.7	20.5	79.6	19.0	73.4	17.5
	-19.3	-20.0	45.6	14.9	45.5	15.8	45.4	16.7	45.3	17.1	45.2	17.5	45.1	18.4	45.0	19.3
	-15.0	-16.0	50.7	16.2	50.5	17.1	50.3	17.9	50.2	18.3	50.1	18.7	49.9	19.6	49.7	20.4
	-12.0	-13.0	54.8	17.2	54.6	18.0	54.3	18.8	54.2	19.2	54.1	19.6	53.8	20.4	53.5	21.3
	-9.0	-10.0	59.2	18.1	58.9	18.9	58.6	19.7	58.4	20.1	58.3	20.5	58.0	21.3	57.6	22.1
	-7.0	-8.0	62.3	18.7	61.9	19.5	61.6	20.3	61.4	20.7	61.2	21.1	60.9	21.9	60.5	22.6
	-5.0	-6.0	65.5	19.3	65.1	20.1	64.7	20.8	64.5	21.2	64.3	21.6	63.9	22.4	63.4	23.2
84.2	-3.0	-4.0	68.7	19.9	68.3	20.6	67.8	21.4	67.6	21.8	67.4	22.2	66.9	23.0	66.5	23.7
	-1.0	-2.0	72.1	20.4	71.6	21.2	71.1	22.0	70.8	22.4	70.6	22.8	70.1	23.5	67.3	23.1
(110%)	0.0	-1.0	73.7	20.7	73.2	21.5	72.7	22.3	72.5	22.7	72.2	23.0	71.7	23.8	67.3	22.5
	2.0	1.0	77.2	21.3	76.6	22.1	76.1	22.8	75.8	23.2	75.5	23.6	72.9	23.3	67.3	21.5
	5.0	4.0	82.4	22.2	81.8	22.9	81.2	23.7	80.8	24.1	78.5	23.5	72.9	21.7	67.3	20.0
	7.0	6.0	86.0	22.8	85.3	23.5	84.2	24.1	81.3	23.2	78.5	22.4	72.9	20.7	67.3	19.0
	9.0	7.8	89.2	23.3	88.5	24.1	84.2	23.1	81.3	22.2	78.5	21.4	72.9	19.8	67.3	18.2
	12.0	10.6	94.3	24.2	89.8	23.1	84.2	21.6	81.3	20.8	78.5	20.0	72.9	18.6	67.3	17.1
	15.0	13.5	95.4	23.1	89.8	21.6	84.2	20.1	81.3	19.4	78.5	18.7	72.9	17.3	67.3	16.0

TC : Total Capacity kW.

PI : Power Input kW (Compressor + Outdoor fan motor).

The data is based on the following conditions. Pipe length : 7.5 m; Height difference : 0 m.

MODEL SELECTION

■ MODELS : AJ*126L + AJ*A90U

• CAPACITY : 68.0kW (24HP)

Total rated heating capacity of indoor unit	Outdoor temperature		Indoor temperature													
			16°CDB		18°CDB		20°CDB		21°CDB		22°CDB		24°CDB		26°CDB	
	(°CDB)	(°CWB)	TC	PI	TC	PI	TC	PI	TC	PI	TC	PI	TC	PI	TC	PI
	-19.3	-20.0	45.5	15.6	45.4	16.5	45.3	17.4	45.2	17.8	45.1	18.2	45.0	19.1	44.9	20.0
	-15.0	-16.0	50.5	17.0	50.3	17.8	50.1	18.7	50.0	19.1	49.9	19.5	49.7	20.3	49.5	21.2
	-12.0	-13.0	54.6	18.0	54.3	18.8	54.1	19.6	53.9	20.0	53.8	20.4	53.5	21.2	53.3	22.0
	-9.0	-10.0	58.9	18.9	58.6	19.7	58.3	20.5	58.1	20.9	57.9	21.3	57.6	22.1	57.3	22.9
	-7.0	-8.0	61.9	19.6	61.6	20.3	61.2	21.1	61.0	21.5	60.8	21.9	60.5	22.7	60.1	23.5
	-5.0	-6.0	65.0	20.2	64.6	21.0	64.2	21.7	64.0	22.1	63.8	22.5	63.4	23.3	61.2	23.0
76.5	-3.0	-4.0	68.2	20.8	67.7	21.6	67.3	22.3	67.1	22.7	66.8	23.1	66.2	23.8	61.2	22.0
	-1.0	-2.0	71.4	21.4	70.9	22.2	70.4	23.0	70.2	23.3	69.9	23.7	66.3	22.7	61.2	20.9
(100%)	0.0	-1.0	73.1	21.7	72.6	22.5	72.0	23.3	71.8	23.6	71.3	23.9	66.3	22.2	61.2	20.4
	2.0	1.0	76.4	22.4	75.9	23.1	75.3	23.9	73.9	23.7	71.4	22.8	66.3	21.1	61.2	19.5
	5.0	4.0	81.5	23.3	80.9	24.1	76.5	22.8	73.9	22.0	71.4	21.2	66.3	19.7	61.2	18.1
	7.0	6.0	85.0	23.9	81.6	23.3	76.5	21.8	73.9	21.0	71.4	20.2	66.3	18.7	61.2	17.3
	9.0	7.8	86.7	23.8	81.6	22.3	76.5	20.8	73.9	20.1	71.4	19.4	66.3	18.0	61.2	16.6
	12.0	10.6	86.7	22.3	81.6	20.9	76.5	19.5	73.9	18.8	71.4	18.1	66.3	16.8	61.2	15.5
	15.0	13.5	86.7	20.8	81.6	19.5	76.5	18.2	73.9	17.6	71.4	17.0	66.3	15.7	61.2	14.5
	-19.3	-20.0	45.4	16.5	45.3	17.4	45.1	18.2	45.1	18.7	45.0	19.1	44.9	20.0	44.7	20.9
	-15.0	-16.0	50.3	17.9	50.1	18.7	49.9	19.6	49.8	20.0	49.7	20.4	49.5	21.2	49.3	22.1
	-12.0	-13.0	54.3	18.9	54.0	19.7	53.8	20.6	53.6	21.0	53.5	21.4	53.2	22.2	53.0	23.0
	-9.0	-10.0	58.5	19.9	58.2	20.7	57.9	21.5	57.7	21.9	57.5	22.3	57.2	23.1	55.1	22.7
	-7.0	-8.0	61.4	20.6	61.1	21.4	60.7	22.2	60.5	22.6	60.3	22.9	59.6	23.5	55.1	21.7
	-5.0	-6.0	64.4	21.3	64.0	22.0	63.6	22.8	63.4	23.2	63.2	23.6	59.7	22.4	55.1	20.7
68.9	-3.0	-4.0	67.5	21.9	67.1	22.7	66.6	23.5	66.3	23.8	64.3	23.1	59.7	21.4	55.1	19.7
	-1.0	-2.0	70.7	22.6	70.2	23.4	68.9	23.6	66.6	22.8	64.3	22.0	59.7	20.4	55.1	18.8
(90%)	0.0	-1.0	72.3	22.9	71.7	23.7	68.9	23.1	66.6	22.3	64.3	21.5	59.7	19.9	55.1	18.4
	2.0	1.0	75.5	23.6	73.4	23.5	68.9	22.0	66.6	21.2	64.3	20.5	59.7	19.0	55.1	17.5
	5.0	4.0	78.0	23.3	73.4	21.9	68.9	20.4	66.6	19.7	64.3	19.0	59.7	17.7	55.1	16.3
	7.0	6.0	78.0	22.2	73.4	20.8	68.9	19.5	66.6	18.8	64.3	18.2	59.7	16.8	55.1	15.5
	9.0	7.8	78.0	21.3	73.4	20.0	68.9	18.7	66.6	18.0	64.3	17.4	59.7	16.1	55.1	14.9
	12.0	10.6	78.0	19.9	73.4	18.7	68.9	17.5	66.6	16.9	64.3	16.3	59.7	15.1	55.1	14.0
	15.0	13.5	78.0	18.6	73.4	17.5	68.9	16.3	66.6	15.8	64.3	15.2	59.7	14.1	55.1	13.1
	-19.3	-20.0	45.2	17.6	45.1	18.4	45.0	19.3	44.9	19.7	44.8	20.2	44.7	21.0	44.6	21.9
	-15.0	-16.0	50.0	19.0	49.8	19.9	49.6	20.7	49.5	21.1	49.4	21.5	49.2	22.4	48.7	23.0
	-12.0	-13.0	53.9	20.1	53.6	20.9	53.4	21.7	53.2	22.1	53.1	22.5	52.7	23.2	49.0	21.7
	-9.0	-10.0	58.0	21.2	57.7	22.0	57.4	22.8	57.2	23.1	56.9	23.4	53.0	21.9	49.0	20.2
	-7.0	-8.0	60.8	21.9	60.5	22.7	60.1	23.4	59.2	23.3	57.1	22.5	53.0	20.9	49.0	19.3
	-5.0	-6.0	63.7	22.6	63.3	23.4	61.2	23.0	59.2	22.2	57.1	21.5	53.0	19.9	49.0	18.4
61.2	-3.0	-4.0	66.7	23.3	65.3	23.5	61.2	22.0	59.2	21.2	57.1	20.5	53.0	19.0	49.0	17.5
	-1.0	-2.0	69.4	23.8	65.3	22.4	61.2	20.9	59.2	20.2	57.1	19.5	53.0	18.1	49.0	16.7
(80%)	0.0	-1.0	69.4	23.2	65.3	21.8	61.2	20.4	59.2	19.7	57.1	19.0	53.0	17.7	49.0	16.3
	2.0	1.0	69.4	22.1	65.3	20.8	61.2	19.5	59.2	18.8	57.1	18.2	53.0	16.9	49.0	15.6
	5.0	4.0	69.4	20.6	65.3	19.4	61.2	18.1	59.2	17.5	57.1	16.9	53.0	15.7	49.0	14.5
	7.0	6.0	69.4	19.6	65.3	18.5	61.2	17.3	59.2	16.7	57.1	16.1	53.0	15.0	49.0	13.8
	9.0	7.8	69.4	18.8	65.3	17.7	61.2	16.6	59.2	16.0	57.1	15.5	53.0	14.4	49.0	13.3
	12.0	10.6	69.4	17.6	65.3	16.6	61.2	15.5	59.2	15.0	57.1	14.5	53.0	13.5	49.0	12.5
	15.0	13.5	69.4	16.5	65.3	15.5	61.2	14.5	59.2	14.0	57.1	13.5	53.0	12.6	49.0	11.7
	-19.3	-20.0	45.0	18.9	44.9	19.8	44.8	20.7	44.7	21.1	44.6	21.5	44.5	22.4	42.8	22.1
	-15.0	-16.0	49.7	20.5	49.5	21.3	49.2	22.1	49.1	22.5	49.0	22.9	46.4	22.0	42.8	20.3
	-12.0	-13.0	53.4	21.6	53.1	22.4	52.9	23.2	51.8	22.9	50.0	22.1	46.4	20.6	42.8	19.0
	-9.0	-10.0	57.3	22.8	56.9	23.4	53.6	22.1	51.8	21.4	50.0	20.6	46.4	19.2	42.8	17.7
	-7.0	-8.0	60.1	23.5	57.1	22.5	53.6	21.1	51.8	20.4	50.0	19.7	46.4	18.3	42.8	16.9
	-5.0	-6.0	60.7	22.8	57.1	21.5	53.6	20.1	51.8	19.4	50.0	18.8	46.4	17.5	42.8	16.1
53.6	-3.0	-4.0	60.7	21.8	57.1	20.5	53.6	19.2	51.8	18.5	50.0	17.9	46.4	16.6	42.8	15.4
	-1.0	-2.0	60.7	20.7	57.1	19.5	53.6	18.3	51.8	17.7	50.0	17.1	46.4	15.9	42.8	14.7
(70%)	0.0	-1.0	60.7	20.3	57.1	19.0	53.6	17.9	51.8	17.3	50.0	16.7	46.4	15.5	42.8	14.3
	2.0	1.0	60.7	19.3	57.1	18.2	53.6	17.0	51.8	16.5	50.0	15.9	46.4	14.8	42.8	13.7
	5.0	4.0	60.7	18.0	57.1	16.9	53.6	15.8	51.8	15.3	50.0	14.8	46.4	13.8	42.8	12.8
	7.0	6.0	60.7	17.1	57.1	16.1	53.6	15.1	51.8	14.6	50.0	14.1	46.4	13.1	42.8	12.2
	9.0	7.8	60.7	16.4	57.1	15.5	53.6	14.5	51.8	14.0	50.0	13.5	46.4	12.6	42.8	11.7
	12.0	10.6	60.7	15.4	57.1	14.5	53.6	13.6	51.8	13.1	50.0	12.7	46.4	11.8	42.8	11.0
	15.0	13.5	60.7	14.4	57.1	13.5	53.6	12.7	51.8	12.3	50.0	11.9	46.4	11.1	42.8	10.3
	-19.3	-20.0	44.7	20.7	44.6	21.6	44.5	22.5	44.1	22.6	42.8	22.1	39.8	20.6	36.7	19.0
	-15.0	-16.0	49.2	22.4	48.7	23.0	45.9	21.7	44.4	21.0	42.8	20.3	39.8	18.9	36.7	17.5
	-12.0	-13.0	52.0	23.0	49.0	21.7	45.9	20.3	44.4	19.7	42.8	19.0	39.8	17.7	36.7	16.4
	-9.0	-10.0	52.0	21.5	49.0	20.2	45.9	19.0	44.4	18.4	42.8	17.7	39.8	16.5	36.7	15.3
	-7.0	-8.0	52.0	20.5	49.0	19.3	45.9	18.1	44.4	17.5	42.8	16.9	39.8	15.8	36.7	14.6
	-5.0	-6.0	52.0	19.5	49.0	18.4	45.9	17.3	44.4	16.7	42.8	16.1	39.8	15.0	36.7	13.9
45.9	-3.0	-4.0	52.0	18.6	49.0	17.5	45.9	16.5	44.4	15.9	42.8	15.4	39.8	14.3	36.7	13.3
	-1.0	-2.0	52.0	17.8	49.0	16.7	45.9	15.7	44.4	15.2	42.8	14.7	39.8	13.7	36.7	12.7
(60%)	0.0	-1.0	52.0	17.3	49.0	16.3	45.9	15.3	44.4	14.8	42.8	14.3	39.8	13.4	36.7	12.4
	2.0	1.0	52.0	16.5	49.0	15.6	45.9	14.6	44.4	14.2	42.8	13.7	39.8	12.8	36.7	11.8
	5.0	4.0	52.0	15.4	49.0	14.5	45.9	13.6	44.4	13.2	42.8	12.8	39.8	11.9	36.7	11.0
	7.0	6.0	52.0	14.7	49.0	13.8	45.9	13.0	44.4	12.6	42.8	12.2	39.8	11.4	36.7	10.6
	9.0	7.8	52.0	14.1	49.0	13.3	45.9	12.5	44.4	12.1	42.8	11.7	39.8	10.9	36.7	10.1
	12.0	10.6	52.0	13.2	49.0	12.5	45.9	11.7	44.4	11.3	42.8	11.0	39.8	10.2	36.7	9.52
	15.0	13.5	52.0	12.4	49.0	11.7	45.9	11.0	44.4	10.6	42.8	10.3	39.8	9.61	36.7	8.94
	-19.3	-20.0	43.3	22.3	40.8	21.1	38.3	19.8	37.0	19.2	35.7	18.5	33.1	17.3	30.6	16.0
	-15.0	-16.0	43.3	20.5	40.8	19.4	38.3	18.2	37.0	17.6	35.7	17.0	33.1	15.9	30.6	14.7
	-12.0	-13.0	43.3	19.2	40.8	18.1	38.3	17.0	37.0	16.5	35.7	15.9	33.1	14.9	30.6	13.8
	-9.0	-10.0	43.3	17.9	40.8	16.9	38.3	15.9	37.0	15.4	35.7	14.9	33.1	13.9	30.6	12.9
	-7.0	-8.0	43.3	17.1	40.8	16.1	38.3	15.2	37.0	14.7	35.7	14.2	33.1	13.3	30.6	12.3
	-5.0	-6.0	43.3	16.3	40.8	15.4	38.3	14.5	37.0	14.0	35.7	13.6	33.1	12.7	30.6	11.8
38.3	-3.0	-4.0	43.3	15.6	40.8	14.7	38.3	13.8	37.0	13.4	35.7	12.9	33.1	12.1	30.6	11.2
	-1.0	-2.0	43.3	14.9	40.8	14.0	38.3	13.2	37.0	12.8	35.7	12.4	33.1	11.5	30.6	10.7
(50%)	0.0	-1.0	43.3	14.5	40.8	13.7	38.3	12.9	37.0	12.5	35.7	12.1	33.1	11.3	30.6	10.5
	2.0	1.0	43.3	13.8	40.8	13.1	38.3	12.3	37.0	11.9	35.7	11.5	33.1	10.8	30.6	10.0
	5.0	4.0	43.3	12.9	40.8	12.2	38.3	11.5	37.0	11.1	35.7	10.8	33.1	10.1	30.6	9.35
	7.0	6.0	43.3	12.3	40.8	11.6	38.3	11.0	37.0	10.6	35.7	10.3	33.1	9.61	30.6	8.95
	9.0	7.8	43.3	11.8	40.8	11.2	38.3	10.5	37.0	10.2	35.7	9.87	33.1	9.23	30.6	8.60
	12.0	10.6	43.3	11.1	40.8	10.5	38.3	9.88	37.0	9.58	35.7	9.28	33.1	8.69	30.6	8.10
	15.0	13.5	43.3	10.4	40.8	9.83	38.3	9.27	37.0	8.99	35.7	8.72	33.1	8.17	30.6	7.62

TC : Total Capacity kW.

PI : Power Input kW (Compressor + Outdoor fan motor).

The data is based on the following conditions. Pipe length : 7.5 m; Height difference : 0 m.

■ MODELS : AJ*A90L + AJ*A72U + AJ*A72U

• CAPACITY : 72.8kW (26HP)

Total rated heating capacity of indoor unit	Outdoor temperature		Indoor temperature													
			16°CDB		18°CDB		20°CDB		21°CDB		22°CDB		24°CDB		26°CDB	
	(°CDB)	(°CWB)	TC	PI	TC	PI	TC	PI	TC	PI	TC	PI	TC	PI	TC	PI
	-19.3	-20.0	49.0	13.3	48.7	14.2	48.5	15.1	48.4	15.5	48.3	16.0	48.1	16.8	47.8	17.7
	-15.0	-16.0	54.5	14.5	54.3	15.4	54.0	16.2	53.8	16.6	53.7	17.0	53.4	17.9	53.1	18.7
	-12.0	-13.0	59.2	15.4	58.8	16.2	58.5	17.0	58.3	17.4	58.1	17.8	57.8	18.6	57.4	19.4
	-9.0	-10.0	64.2	16.2	63.8	17.0	63.3	17.8	63.1	18.1	62.9	18.5	62.5	19.3	62.1	20.1
	-7.0	-8.0	67.7	16.7	67.2	17.4	66.7	18.2	66.5	18.6	66.3	19.0	65.8	19.8	65.3	20.6
	-5.0	-6.0	71.3	17.1	70.8	17.9	70.3	18.7	70.0	19.1	69.8	19.5	69.2	20.3	68.7	21.1
122	-3.0	-4.0	75.0	17.6	74.5	18.4	73.9	19.2	73.6	19.6	73.3	20.0	72.8	20.7	72.2	21.5
	-1.0	-2.0	78.9	18.1	78.3	18.9	77.7	19.6	77.3	20.0	77.0	20.4	76.4	21.2	75.8	22.0
(150%)	0.0	-1.0	80.8	18.3	80.2	19.1	79.6	19.9	79.2	20.2	78.9	20.6	78.3	21.4	77.6	22.2
	2.0	1.0	84.8	18.8	84.1	19.5	83.4	20.3	83.1	20.7	82.8	21.1	82.1	21.9	81.3	22.6
	5.0	4.0	91.0	19.5	90.2	20.2	89.4	21.0	89.0	21.4	88.7	21.8	87.9	22.5	87.1	23.3
	7.0	6.0	95.1	19.9	94.3	20.7	93.5	21.4	93.1	21.8	92.7	22.2	91.8	23.0	91.0	23.8
	9.0	7.8	99.0	20.3	98.1	21.1	97.2	21.9	96.8	22.2	96.3	22.6	95.5	23.4	94.6	24.2
	12.0	10.6	105	20.9	104	21.7	103	22.5	102	22.9	102	23.3	101	24.1	97.8	23.9
	15.0	13.5	111	21.6	110	22.4	109	23.2	108	23.6	108	24.0	105	24.3	97.8	22.3
	-19.3	-20.0	48.9	13.7	48.6	14.6	48.4	15.5	48.3	15.9	48.2	16.3	48.0	17.2	47.7	18.1
	-15.0	-16.0	54.4	14.9	54.1	15.8	53.8	16.6	53.7	17.0	53.5	17.4	53.2	18.3	52.9	19.1
	-12.0	-13.0	59.0	15.8	58.7	16.6	58.3	17.4	58.1	17.8	57.9	18.2	57.6	19.0	57.2	19.8
	-9.0	-10.0	63.9	16.6	63.5	17.4	63.1	18.2	62.9	18.6	62.7	19.0	62.3	19.8	61.8	20.6
	-7.0	-8.0	67.4	17.1	66.9	17.9	66.5	18.7	66.2	19.1	66.0	19.5	65.5	20.3	65.1	21.0
	-5.0	-6.0	71.0	17.6	70.5	18.4	70.0	19.2	69.7	19.6	69.4	20.0	68.9	20.7	68.4	21.5
114	-3.0	-4.0	74.7	18.1	74.1	18.9	73.5	19.7	73.3	20.1	73.0	20.4	72.4	21.2	71.8	22.0
	-1.0	-2.0	78.5	18.6	77.8	19.4	77.2	20.2	76.9	20.5	76.6	20.9	76.0	21.7	75.4	22.5
(140%)	0.0	-1.0	80.4	18.9	79.8	19.6	79.1	20.4	78.8	20.8	78.5	21.2	77.8	21.9	77.2	22.7
	2.0	1.0	84.3	19.3	83.6	20.1	82.9	20.9	82.6	21.3	82.3	21.6	81.5	22.4	80.8	23.2
	5.0	4.0	90.4	20.1	89.6	20.8	88.8	21.6	88.4	22.0	88.0	22.4	87.3	23.1	86.5	23.9
	7.0	6.0	94.5	20.5	93.7	21.3	92.8	22.1	92.4	22.5	92.0	22.8	91.2	23.6	90.3	24.4
	9.0	7.8	98.2	21.0	97.4	21.7	96.5	22.5	96.0	22.9	95.6	23.3	94.7	24.1	91.3	23.7
	12.0	10.6	104	21.7	103	22.4	102	23.2	101	23.6	101	24.0	98.9	24.2	91.3	22.2
	15.0	13.5	110	22.4	109	23.2	108	24.0	107	24.3	106	24.4	98.9	22.6	91.3	20.7
	-19.3	-20.0	48.8	14.1	48.5	15.0	48.3	15.9	48.2	16.3	48.1	16.7	47.8	17.6	47.6	18.5
	-15.0	-16.0	54.2	15.4	54.0	16.2	53.7	17.0	53.5	17.5	53.4	17.9	53.1	18.7	52.7	19.5
	-12.0	-13.0	58.8	16.3	58.4	17.1	58.1	17.9	57.9	18.3	57.7	18.7	57.4	19.5	57.0	20.3
	-9.0	-10.0	63.7	17.1	63.3	17.9	62.8	18.7	62.6	19.1	62.4	19.5	62.0	20.3	61.6	21.1
	-7.0	-8.0	67.1	17.7	66.6	18.4	66.2	19.2	65.9	19.6	65.7	20.0	65.2	20.8	64.7	21.6
	-5.0	-6.0	70.6	18.2	70.1	19.0	69.6	19.7	69.3	20.1	69.1	20.5	68.6	21.3	68.0	22.1
105	-3.0	-4.0	74.2	18.7	73.7	19.5	73.1	20.2	72.9	20.6	72.6	21.0	72.0	21.8	71.4	22.5
	-1.0	-2.0	78.0	19.2	77.4	20.0	76.8	20.8	76.5	21.1	76.1	21.5	75.5	22.3	74.9	23.0
(130%)	0.0	-1.0	79.9	19.5	79.2	20.2	78.6	21.0	78.3	21.4	78.0	21.8	77.3	22.5	76.7	23.3
	2.0	1.0	83.7	20.0	83.1	20.8	82.4	21.5	82.0	21.9	81.7	22.3	81.0	23.0	80.3	23.8
	5.0	4.0	89.7	20.8	88.9	21.5	88.1	22.3	87.7	22.7	87.4	23.0	86.6	23.8	84.8	24.1
	7.0	6.0	93.7	21.3	92.9	22.0	92.1	22.8	91.6	23.2	91.2	23.5	90.4	24.3	84.8	22.9
	9.0	7.8	97.4	21.7	96.5	22.5	95.6	23.3	95.2	23.6	94.7	24.0	91.8	23.9	84.8	22.0
	12.0	10.6	103	22.5	102	23.2	101	24.0	100	24.4	98.9	24.2	91.8	22.3	84.8	20.6
	15.0	13.5	109	23.2	108	24.0	105	24.3	102	23.4	98.9	22.6	91.8	20.9	84.8	19.2
	-19.3	-20.0	48.6	14.6	48.4	15.5	48.2	16.4	48.1	16.8	47.9	17.2	47.7	18.1	47.5	19.0
	-15.0	-16.0	54.1	15.9	53.8	16.7	53.5	17.6	53.3	18.0	53.2	18.4	52.9	19.2	52.6	20.0
	-12.0	-13.0	58.6	16.8	58.2	17.6	57.8	18.4	57.7	18.8	57.5	19.2	57.1	20.0	56.8	20.8
	-9.0	-10.0	63.4	17.7	62.9	18.5	62.5	19.3	62.3	19.7	62.1	20.1	61.7	20.8	61.2	21.6
	-7.0	-8.0	66.7	18.3	66.3	19.1	65.8	19.8	65.6	20.2	65.3	20.6	64.9	21.4	64.4	22.1
	-5.0	-6.0	70.2	18.8	69.7	19.6	69.2	20.4	68.9	20.8	68.7	21.1	68.1	21.9	67.6	22.7
97.8	-3.0	-4.0	73.8	19.4	73.2	20.1	72.6	20.9	72.4	21.3	72.1	21.7	71.5	22.4	70.9	23.2
	-1.0	-2.0	77.4	19.9	76.8	20.7	76.2	21.4	75.9	21.8	75.6	22.2	75.0	23.0	74.3	23.7
(120%)	0.0	-1.0	79.3	20.2	78.7	21.0	78.0	21.7	77.7	22.1	77.4	22.5	76.7	23.2	76.1	24.0
	2.0	1.0	83.1	20.7	82.4	21.5	81.7	22.2	81.3	22.6	81.0	23.0	80.3	23.7	78.2	23.9
	5.0	4.0	88.9	21.6	88.1	22.3	87.3	23.1	86.9	23.4	86.6	23.8	84.8	24.1	78.2	22.2
	7.0	6.0	92.8	22.1	92.0	22.9	91.2	23.6	90.7	24.0	90.3	24.4	84.8	22.9	78.2	21.1
	9.0	7.8	96.4	22.6	95.5	23.4	94.6	24.1	94.2	24.5	91.3	23.7	84.8	22.0	78.2	20.2
	12.0	10.6	102	23.4	101	24.2	97.8	23.9	94.5	23.0	91.3	22.2	84.8	20.6	78.2	18.9
	15.0	13.5	107	24.2	104	23.9	97.8	22.3	94.5	21.5	91.3	20.7	84.8	19.2	78.2	17.7
	-19.3	-20.0	48.5	15.2	48.2	16.1	48.0	16.9	47.9	17.4	47.8	17.8	47.5	18.7	47.3	19.5
	-15.0	-16.0	53.8	16.5	53.5	17.4	53.2	18.2	53.1	18.6	52.9	19.0	52.6	19.8	52.3	20.6
	-12.0	-13.0	58.3	17.5	57.9	18.3	57.6	19.1	57.4	19.5	57.2	19.9	56.8	20.7	56.5	21.5
	-9.0	-10.0	63.0	18.4	62.6	19.2	62.2	20.0	61.9	20.3	61.7	20.7	61.3	21.5	60.9	22.3
	-7.0	-8.0	66.3	19.0	65.8	19.8	65.4	20.5	65.1	20.9	64.9	21.3	64.4	22.1	63.9	22.8
	-5.0	-6.0	69.7	19.6	69.2	20.3	68.7	21.1	68.4	21.5	68.2	21.9	67.6	22.6	67.1	23.4
89.7	-3.0	-4.0	73.2	20.2	72.6	20.9	72.1	21.7	71.8	22.0	71.5	22.4	70.9	23.2	70.3	23.9
	-1.0	-2.0	76.8	20.7	76.2	21.5	75.6	22.2	75.2	22.6	74.9	23.0	74.3	23.7	71.7	23.5
(110%)	0.0	-1.0	78.6	21.0	78.0	21.8	77.3	22.5	77.0	22.9	76.7	23.3	76.0	24.0	71.7	22.9
	2.0	1.0	82.3	21.6	81.6	22.3	80.9	23.1	80.6	23.5	80.2	23.8	77.7	23.7	71.7	21.8
	5.0	4.0	87.9	22.5	87.2	23.2	86.4	24.0	86.0	24.3	83.7	23.8	77.7	22.0	71.7	20.3
	7.0	6.0	91.8	23.1	90.9	23.8	89.7	24.3	86.7	23.5	83.7	22.6	77.7	21.0	71.7	19.3
	9.0	7.8	95.2	23.6	94.4	24.3	89.7	23.3	86.7	22.5	83.7	21.7	77.7	20.1	71.7	18.5
	12.0	10.6	100	24.5	95.6	23.3	89.7	21.8	86.7	21.0	83.7	20.3	77.7	18.8	71.7	17.4
	15.0	13.5	101	23.2	95.6	21.8	89.7	20.3	86.7	19.6	83.7	19.0	77.7	17.6	71.7	16.2

TC : Total Capacity kW.

PI : Power Input kW (Compressor + Outdoor fan motor).

The data is based on the following conditions. Pipe length : 7.5 m; Height difference : 0 m.

MODEL SELECTION

■ MODELS : AJ*A90L + AJ*A72U + AJ*A72U

• CAPACITY : 72.8kW (26HP)

Total rated heating capacity of indoor unit	Outdoor temperature		Indoor temperature													
			16°CDB		18°CDB		20°CDB		21°CDB		22°CDB		24°CDB		26°CDB	
	(°CDB)	(°CWB)	TC	PI	TC	PI	TC	PI	TC	PI	TC	PI	TC	PI	TC	PI
	-19.3	-20.0	48.3	15.9	48.1	16.8	47.8	17.6	47.7	18.1	47.6	18.5	47.4	19.3	47.1	20.2
	-15.0	-16.0	53.6	17.3	53.3	18.1	53.0	18.9	52.8	19.3	52.7	19.7	52.4	20.5	52.1	21.4
	-12.0	-13.0	57.9	18.3	57.6	19.1	57.2	19.8	57.0	20.2	56.8	20.6	56.5	21.4	56.1	22.2
	-9.0	-10.0	62.6	19.2	62.1	20.0	61.7	20.8	61.5	21.1	61.3	21.5	60.9	22.3	60.4	23.1
	-7.0	-8.0	65.8	19.8	65.3	20.6	64.9	21.4	64.6	21.7	64.4	22.1	63.9	22.9	63.4	23.6
	-5.0	-6.0	69.1	20.5	68.6	21.2	68.1	22.0	67.8	22.3	67.6	22.7	67.0	23.5	65.2	23.5
81.5	-3.0	-4.0	72.5	21.1	72.0	21.8	71.4	22.6	71.1	22.9	70.8	23.3	70.2	24.1	65.2	22.4
	-1.0	-2.0	76.0	21.7	75.4	22.4	74.8	23.2	74.5	23.5	74.2	23.9	70.6	23.1	65.2	21.3
(100%)	0.0	-1.0	77.8	22.0	77.1	22.7	76.5	23.5	76.2	23.8	75.8	24.2	70.6	22.6	65.2	20.8
	2.0	1.0	81.4	22.6	80.7	23.4	80.0	24.1	78.8	24.0	76.1	23.2	70.6	21.5	65.2	19.8
	5.0	4.0	86.8	23.6	86.1	24.3	81.5	23.1	78.8	22.3	76.1	21.5	70.6	20.0	65.2	18.5
	7.0	6.0	90.5	24.2	86.9	23.6	81.5	22.0	78.8	21.3	76.1	20.5	70.6	19.1	65.2	17.6
	9.0	7.8	92.4	24.0	86.9	22.6	81.5	21.1	78.8	20.4	76.1	19.7	70.6	18.3	65.2	16.9
	12.0	10.6	92.4	22.5	86.9	21.1	81.5	19.7	78.8	19.1	76.1	18.4	70.6	17.1	65.2	15.8
	15.0	13.5	92.4	21.0	86.9	19.7	81.5	18.5	78.8	17.8	76.1	17.2	70.6	16.0	65.2	14.8
	-19.3	-20.0	48.1	16.8	47.8	17.6	47.6	18.5	47.5	18.9	47.4	19.3	47.1	20.2	46.9	21.0
	-15.0	-16.0	53.3	18.2	53.0	19.0	52.7	19.8	52.5	20.2	52.3	20.6	52.0	21.4	51.7	22.2
	-12.0	-13.0	57.5	19.2	57.2	20.0	56.8	20.8	56.6	21.2	56.4	21.5	56.1	22.3	55.7	23.1
	-9.0	-10.0	62.0	20.2	61.6	21.0	61.2	21.7	61.0	22.1	60.7	22.5	60.3	23.3	58.7	23.3
	-7.0	-8.0	65.2	20.9	64.7	21.6	64.2	22.4	64.0	22.7	63.8	23.1	63.3	23.9	58.7	22.2
	-5.0	-6.0	68.4	21.5	67.9	22.3	67.4	23.0	67.1	23.4	66.8	23.7	63.6	22.9	58.7	21.2
73.4	-3.0	-4.0	71.7	22.2	71.1	22.9	70.6	23.6	70.3	24.0	68.5	23.5	63.6	21.8	58.7	20.2
	-1.0	-2.0	75.1	22.8	74.5	23.6	73.4	24.0	70.9	23.2	68.5	22.4	63.6	20.8	58.7	19.2
(90%)	0.0	-1.0	76.8	23.2	76.1	23.9	73.4	23.4	70.9	22.6	68.5	21.9	63.6	20.3	58.7	18.8
	2.0	1.0	80.2	23.8	78.2	23.9	73.4	22.3	70.9	21.6	68.5	20.8	63.6	19.3	58.7	17.9
	5.0	4.0	83.1	23.6	78.2	22.2	73.4	20.8	70.9	20.1	68.5	19.4	63.6	18.0	58.7	16.7
	7.0	6.0	83.1	22.5	78.2	21.1	73.4	19.8	70.9	19.1	68.5	18.5	63.6	17.2	58.7	15.9
	9.0	7.8	83.1	21.5	78.2	20.2	73.4	19.0	70.9	18.3	68.5	17.7	63.6	16.5	58.7	15.2
	12.0	10.6	83.1	20.2	78.2	18.9	73.4	17.8	70.9	17.2	68.5	16.6	63.6	15.4	58.7	14.3
	15.0	13.5	83.1	18.8	78.2	17.7	73.4	16.6	70.9	16.1	68.5	15.5	63.6	14.4	58.7	13.4
	-19.3	-20.0	47.8	17.8	47.6	18.6	47.3	19.5	47.2	19.9	47.1	20.3	46.8	21.2	46.6	22.0
	-15.0	-16.0	52.8	19.3	52.5	20.1	52.2	20.9	52.1	21.3	51.9	21.7	51.6	22.5	51.3	23.3
	-12.0	-13.0	57.0	20.3	56.6	21.1	56.3	21.9	56.1	22.3	55.9	22.7	55.5	23.4	52.2	22.3
	-9.0	-10.0	61.4	21.4	60.9	22.2	60.5	22.9	60.3	23.3	60.1	23.7	56.5	22.4	52.2	20.8
	-7.0	-8.0	64.4	22.1	63.9	22.8	63.5	23.6	63.0	23.8	60.9	23.0	56.5	21.4	52.2	19.8
	-5.0	-6.0	67.5	22.8	67.0	23.5	65.2	23.5	63.0	22.7	60.9	21.9	56.5	20.4	52.2	18.9
65.2	-3.0	-4.0	70.7	23.5	69.5	23.9	65.2	22.4	63.0	21.6	60.9	20.9	56.5	19.4	52.2	18.0
	-1.0	-2.0	73.9	24.2	69.5	22.8	65.2	21.3	63.0	20.6	60.9	19.9	56.5	18.5	52.2	17.2
(80%)	0.0	-1.0	73.9	23.6	69.5	22.2	65.2	20.8	63.0	20.1	60.9	19.4	56.5	18.1	52.2	16.7
	2.0	1.0	73.9	22.5	69.5	21.2	65.2	19.8	63.0	19.2	60.9	18.5	56.5	17.2	52.2	16.0
	5.0	4.0	73.9	20.9	69.5	19.7	65.2	18.5	63.0	17.9	60.9	17.3	56.5	16.1	52.2	14.9
	7.0	6.0	73.9	19.9	69.5	18.8	65.2	17.6	63.0	17.0	60.9	16.5	56.5	15.3	52.2	14.2
	9.0	7.8	73.9	19.1	69.5	18.0	65.2	16.9	63.0	16.3	60.9	15.8	56.5	14.7	52.2	13.6
	12.0	10.6	73.9	17.9	69.5	16.8	65.2	15.8	63.0	15.3	60.9	14.8	56.5	13.8	52.2	12.8
	15.0	13.5	73.9	16.7	69.5	15.8	65.2	14.8	63.0	14.3	60.9	13.9	56.5	12.9	52.2	12.0
	-19.3	-20.0	47.4	19.1	47.2	20.0	46.9	20.8	46.8	21.2	46.7	21.6	46.5	22.4	45.6	22.8
	-15.0	-16.0	52.3	20.6	52.0	21.4	51.7	22.2	51.6	22.6	51.4	23.0	49.4	22.6	45.6	21.0
	-12.0	-13.0	56.3	21.8	56.0	22.5	55.6	23.3	55.1	23.5	53.2	22.7	49.4	21.2	45.6	19.6
	-9.0	-10.0	60.5	22.9	60.1	23.6	57.1	22.7	55.1	21.9	53.2	21.2	49.4	19.7	45.6	18.3
	-7.0	-8.0	63.4	23.6	60.9	23.0	57.1	21.6	55.1	20.9	53.2	20.2	49.4	18.8	45.6	17.4
	-5.0	-6.0	64.7	23.3	60.9	21.9	57.1	20.6	55.1	19.9	53.2	19.3	49.4	17.9	45.6	16.6
57.1	-3.0	-4.0	64.7	22.2	60.9	20.9	57.1	19.6	55.1	19.0	53.2	18.4	49.4	17.1	45.6	15.9
	-1.0	-2.0	64.7	21.2	60.9	19.9	57.1	18.7	55.1	18.1	53.2	17.5	49.4	16.3	45.6	15.1
(70%)	0.0	-1.0	64.7	20.6	60.9	19.4	57.1	18.3	55.1	17.7	53.2	17.1	49.4	15.9	45.6	14.8
	2.0	1.0	64.7	19.7	60.9	18.5	57.1	17.4	55.1	16.8	53.2	16.3	49.4	15.2	45.6	14.1
	5.0	4.0	64.7	18.3	60.9	17.3	57.1	16.2	55.2	15.7	53.2	15.2	49.4	14.2	45.6	13.2
	7.0	6.0	64.7	17.5	60.9	16.5	57.1	15.5	55.1	15.0	53.2	14.5	49.4	13.5	45.6	12.6
	9.0	7.8	64.7	16.7	60.9	15.8	57.1	14.8	55.1	14.4	53.2	13.9	49.4	13.0	45.6	12.1
	12.0	10.6	64.7	15.7	60.9	14.8	57.1	13.9	55.1	13.5	53.2	13.1	49.4	12.2	45.6	11.3
	15.0	13.5	64.7	14.7	60.9	13.9	57.1	13.0	55.1	12.6	53.2	12.2	49.4	11.4	45.6	10.7
	-19.3	-20.0	46.9	20.8	46.7	21.7	46.4	22.5	46.3	22.9	45.6	22.8	42.4	21.3	39.1	19.7
	-15.0	-16.0	51.6	22.4	51.3	23.2	48.9	22.4	47.3	21.7	45.6	21.0	42.4	19.5	39.1	18.1
	-12.0	-13.0	55.4	23.6	52.2	22.3	48.9	20.9	47.3	20.3	45.6	19.6	42.4	18.3	39.1	16.9
	-9.0	-10.0	55.4	22.0	52.2	20.8	48.9	19.5	47.3	18.9	45.6	18.3	42.4	17.0	39.1	15.8
	-7.0	-8.0	55.4	21.0	52.2	19.8	48.9	18.6	47.3	18.0	45.6	17.4	42.4	16.3	39.1	15.1
	-5.0	-6.0	55.4	20.0	52.2	18.9	48.9	17.7	47.3	17.2	45.6	16.6	42.4	15.5	39.1	14.4
48.9	-3.0	-4.0	55.4	19.1	52.2	18.0	48.9	16.9	47.3	16.4	45.6	15.9	42.4	14.8	39.1	13.8
	-1.0	-2.0	55.4	18.2	52.2	17.2	48.9	16.1	47.3	15.6	45.6	15.1	42.4	14.1	39.1	13.1
(60%)	0.0	-1.0	55.4	17.8	52.2	16.7	48.9	15.8	47.3	15.3	45.6	14.8	42.4	13.8	39.1	12.8
	2.0	1.0	55.4	16.9	52.2	16.0	48.9	15.0	47.3	14.6	45.6	14.1	42.4	13.2	39.1	12.3
	5.0	4.0	55.4	15.8	52.2	14.9	48.9	14.0	47.3	13.6	45.6	13.2	42.4	12.3	39.1	11.5
	7.0	6.0	55.4	15.0	52.2	14.2	48.9	13.4	47.3	13.0	45.6	12.6	42.4	11.8	39.1	11.0
	9.0	7.8	55.4	14.4	52.2	13.6	48.9	12.9	47.3	12.5	45.6	12.1	42.4	11.3	39.1	10.5
	12.0	10.6	55.4	13.5	52.2	12.8	48.9	12.1	47.3	11.7	45.6	11.3	42.4	10.6	39.1	9.92
	15.0	13.5	55.4	12.7	52.2	12.0	48.9	11.3	47.3	11.0	45.6	10.7	42.4	9.99	39.1	9.33
	-19.3	-20.0	46.2	23.1	43.5	21.8	40.8	20.5	39.4	19.9	38.0	19.2	35.3	18.0	32.6	16.7
	-15.0	-16.0	46.2	21.2	43.5	20.0	40.8	18.8	39.4	18.3	38.0	17.7	35.3	16.5	32.6	15.3
	-12.0	-13.0	46.2	19.8	43.5	18.7	40.8	17.6	39.4	17.1	38.0	16.5	35.3	15.4	32.6	14.3
	-9.0	-10.0	46.2	18.5	43.5	17.4	40.8	16.4	39.4	15.9	38.0	15.4	35.3	14.4	32.6	13.4
	-7.0	-8.0	46.2	17.6	43.5	16.6	40.8	15.7	39.4	15.2	38.0	14.7	35.3	13.8	32.6	12.8
	-5.0	-6.0	46.2	16.8	43.5	15.9	40.8	15.0	39.4	14.5	38.0	14.0	35.3	13.1	32.6	12.2
40.8	-3.0	-4.0	46.2	16.0	43.5	15.1	40.8	14.3	39.4	13.8	38.0	13.4	35.3	12.5	32.6	11.7
	-1.0	-2.0	46.2	15.3	43.5	14.5	40.8	13.6	39.4	13.2	38.0	12.8	35.3	12.0	32.6	11.2
(50%)	0.0	-1.0	46.2	14.9	43.5	14.1	40.8	13.3	39.4	12.9	38.0	12.5	35.3	11.7	32.6	10.9
	2.0	1.0	46.2	14.3	43.5	13.5	40.8	12.7	39.4	12.3	38.0	12.0	35.3	11.2	32.6	10.5
	5.0	4.0	46.2	13.3	43.5	12.6	40.8	11.9	39.4	11.5	38.0	11.2	35.3	10.5	32.6	9.79
	7.0	6.0	46.2	12.7	43.5	12.0	40.8	11.4	39.4	11.0	38.0	10.7	35.3	10.0	32.6	9.37
	9.0	7.8	46.2	12.2	43.5	11.6	40.8	10.9	39.4	10.6	38.0	10.3	35.3	9.65	32.6	9.03
	12.0	10.6	46.2	11.5	43.5	10.9	40.8	10.3	39.4	9.97	38.0	9.68	35.3	9.10	32.6	8.52
	15.0	13.5	46.2	10.8	43.5	10.2	40.8	9.66	39.4	9.39	38.0	9.11	35.3	8.57	32.6	8.04

TC : Total Capacity kW.

PI : Power Input kW (Compressor + Outdoor fan motor).

The data is based on the following conditions. Pipe length : 7.5 m; Height difference : 0 m.

MODEL SELECTION

■ MODELS : AJ*126L + AJ*126U

• CAPACITY : 80.0kW (28HP)

Total rated heating capacity of indoor unit	Outdoor temperature		Indoor temperature													
			16°CDB		18°CDB		20°CDB		21°CDB		22°CDB		24°CDB		26°CDB	
	(°CDB)	(°CWB)	TC	PI	TC	PI	TC	PI	TC	PI	TC	PI	TC	PI	TC	PI
	-19.3	-20.0	53.9	15.7	53.9	16.8	53.8	17.9	53.7	18.4	53.7	19.0	53.6	20.1	53.5	21.2
	-15.0	-16.0	60.1	17.1	59.9	18.2	59.8	19.3	59.7	19.8	59.6	20.3	59.4	21.4	59.3	22.4
	-12.0	-13.0	65.1	18.2	64.9	19.2	64.7	20.2	64.6	20.7	64.5	21.3	64.2	22.3	64.0	23.3
	-9.0	-10.0	70.6	19.1	70.3	20.2	70.0	21.2	69.8	21.7	69.7	22.2	69.4	23.2	69.0	24.2
	-7.0	-8.0	74.4	19.8	74.0	20.8	73.7	21.8	73.5	22.3	73.3	22.8	73.0	23.8	72.6	24.8
	-5.0	-6.0	78.3	20.4	77.9	21.4	77.5	22.3	77.3	22.8	77.1	23.3	76.7	24.3	76.3	25.3
135	-3.0	-4.0	82.3	20.9	81.9	21.9	81.4	22.9	81.2	23.4	81.0	23.9	80.5	24.9	80.0	25.9
	-1.0	-2.0	86.5	21.5	86.0	22.5	85.5	23.5	85.2	24.0	85.0	24.5	84.5	25.4	83.9	26.4
(150%)	0.0	-1.0	88.6	21.8	88.1	22.8	87.6	23.8	87.3	24.2	87.0	24.7	86.5	25.7	85.9	26.7
	2.0	1.0	93.0	22.4	92.4	23.3	91.8	24.3	91.5	24.8	91.2	25.3	90.6	26.3	89.9	27.2
	5.0	4.0	99.6	23.2	98.9	24.2	98.2	25.1	97.9	25.6	97.6	26.1	96.9	27.1	96.1	28.1
	7.0	6.0	104	23.7	103	24.7	102	25.7	102	26.2	101	26.7	101	27.6	100	28.6
	9.0	7.8	108	24.2	107	25.2	106	26.2	106	26.7	105	27.2	105	28.1	104	29.1
	12.0	10.6	114	25.0	113	26.0	113	27.0	112	27.5	112	28.0	111	29.0	108	28.9
	15.0	13.5	121	25.8	120	26.8	119	27.8	119	28.3	118	28.8	117	29.5	108	27.0
	-19.3	-20.0	53.9	16.1	53.8	17.2	53.7	18.3	53.7	18.9	53.7	19.4	53.6	20.5	53.5	21.6
	-15.0	-16.0	60.0	17.6	59.8	18.7	59.7	19.8	59.6	20.3	59.5	20.8	59.3	21.9	59.2	22.9
	-12.0	-13.0	65.0	18.7	64.8	19.7	64.6	20.8	64.5	21.3	64.3	21.8	64.1	22.8	63.9	23.8
	-9.0	-10.0	70.4	19.7	70.1	20.7	69.8	21.7	69.7	22.2	69.5	22.7	69.2	23.7	68.9	24.7
	-7.0	-8.0	74.2	20.4	73.8	21.3	73.5	22.3	73.3	22.8	73.1	23.3	72.7	24.3	72.4	25.3
	-5.0	-6.0	78.1	21.0	77.7	22.0	77.3	23.0	77.0	23.4	76.8	23.9	76.4	24.9	76.0	25.9
126	-3.0	-4.0	82.1	21.6	81.6	22.6	81.2	23.5	80.9	24.0	80.7	24.5	80.2	25.5	79.7	26.5
	-1.0	-2.0	86.2	22.2	85.7	23.2	85.2	24.1	84.9	24.6	84.6	25.1	84.1	26.1	83.6	27.1
(140%)	0.0	-1.0	88.3	22.5	87.7	23.5	87.2	24.4	86.9	24.9	86.6	25.4	86.1	26.4	85.5	27.3
	2.0	1.0	92.5	23.1	91.9	24.0	91.3	25.0	91.0	25.5	90.7	26.0	90.1	26.9	89.5	27.9
	5.0	4.0	99.1	23.9	98.4	24.9	97.7	25.9	97.4	26.4	97.0	26.9	96.3	27.8	95.6	28.8
	7.0	6.0	103	24.5	102	25.5	102	26.5	101	27.0	101	27.4	100	28.4	99.8	29.4
	9.0	7.8	107	25.1	106	26.0	106	27.0	105	27.5	105	28.0	104	29.0	100	28.6
	12.0	10.6	114	25.9	113	26.9	112	27.9	111	28.3	111	28.8	109	29.2	100	26.8
	15.0	13.5	120	26.8	119	27.8	118	28.8	118	29.3	117	29.6	109	27.3	100	25.0
	-19.3	-20.0	53.9	16.7	53.8	17.8	53.7	18.9	53.7	19.4	53.6	20.0	53.5	21.1	53.4	22.2
	-15.0	-16.0	59.9	18.2	59.8	19.3	59.6	20.3	59.5	20.9	59.4	21.4	59.2	22.4	59.1	23.5
	-12.0	-13.0	64.9	19.3	64.7	20.3	64.4	21.4	64.3	21.9	64.2	22.4	64.0	23.4	63.7	24.4
	-9.0	-10.0	70.2	20.4	69.9	21.4	69.6	22.4	69.5	22.9	69.3	23.4	69.0	24.4	68.7	25.4
	-7.0	-8.0	73.9	21.0	73.6	22.0	73.2	23.0	73.1	23.5	72.9	24.0	72.5	25.0	72.1	26.0
	-5.0	-6.0	77.8	21.7	77.4	22.7	77.0	23.6	76.8	24.1	76.5	24.6	76.1	25.6	75.7	26.6
117	-3.0	-4.0	81.7	22.3	81.3	23.3	80.8	24.3	80.6	24.8	80.3	25.2	79.9	26.2	79.4	27.2
	-1.0	-2.0	85.8	23.0	85.3	23.9	84.8	24.9	84.5	25.4	84.2	25.9	83.7	26.8	83.2	27.8
(130%)	0.0	-1.0	87.8	23.3	87.3	24.2	86.8	25.2	86.5	25.7	86.2	26.2	85.6	27.1	85.1	28.1
	2.0	1.0	92.0	23.9	91.4	24.9	90.8	25.8	90.5	26.3	90.2	26.8	89.6	27.7	89.0	28.7
	5.0	4.0	98.5	24.8	97.8	25.8	97.1	26.7	96.7	27.2	96.4	27.7	95.7	28.7	93.6	29.0
	7.0	6.0	102	25.4	102	26.4	101	27.4	100	27.9	100	28.3	99.8	29.3	93.6	27.6
	9.0	7.8	106	26.0	106	27.0	105	27.9	104	28.4	104	28.9	101	28.8	93.6	26.5
	12.0	10.6	113	26.9	112	27.9	111	28.9	110	29.4	109	29.2	101	27.0	93.6	24.8
	15.0	13.5	119	27.9	118	28.9	117	29.5	113	28.4	109	27.3	101	25.2	93.6	23.1
	-19.3	-20.0	53.8	17.3	53.7	18.4	53.7	19.5	53.6	20.1	53.6	20.6	53.5	21.7	53.4	22.8
	-15.0	-16.0	59.8	18.9	59.6	20.0	59.5	21.0	59.4	21.5	59.3	22.1	59.1	23.1	59.0	24.1
	-12.0	-13.0	64.7	20.0	64.5	21.1	64.3	22.1	64.2	22.6	64.0	23.1	63.8	24.1	63.5	25.1
	-9.0	-10.0	70.0	21.1	69.7	22.1	69.4	23.1	69.2	23.6	69.1	24.1	68.8	25.1	68.4	26.1
	-7.0	-8.0	73.7	21.8	73.3	22.8	72.9	23.8	72.8	24.3	72.6	24.8	72.2	25.8	71.8	26.7
	-5.0	-6.0	77.4	22.5	77.0	23.5	76.6	24.4	76.4	24.9	76.2	25.4	75.8	26.4	75.4	27.4
108	-3.0	-4.0	81.3	23.2	80.9	24.1	80.4	25.1	80.2	25.6	79.9	26.1	79.5	27.0	79.0	28.0
	-1.0	-2.0	85.3	23.8	84.8	24.8	84.3	25.8	84.0	26.2	83.7	26.7	83.2	27.7	82.7	28.6
(120%)	0.0	-1.0	87.3	24.2	86.8	25.1	86.2	26.1	86.0	26.6	85.7	27.0	85.1	28.0	84.6	29.0
	2.0	1.0	91.4	24.8	90.9	25.8	90.2	26.7	89.9	27.2	89.6	27.7	89.0	28.7	86.4	28.6
	5.0	4.0	97.8	25.8	97.1	26.8	96.4	27.7	96.0	28.2	95.7	28.7	93.6	29.0	86.4	26.6
	7.0	6.0	102	26.5	101	27.5	100	28.4	100	28.9	99.8	29.4	93.6	27.6	86.4	25.4
	9.0	7.8	105	27.1	105	28.1	104	29.0	103	29.5	100	28.6	93.6	26.5	86.4	24.3
	12.0	10.6	112	28.1	111	29.0	108	28.9	104	27.9	100	26.8	93.6	24.8	86.4	22.8
	15.0	13.5	118	29.1	115	29.0	108	27.0	104	26.0	100	25.0	93.6	23.1	86.4	21.3
	-19.3	-20.0	53.8	18.1	53.7	19.2	53.6	20.3	53.6	20.8	53.5	21.4	53.4	22.4	53.3	23.5
	-15.0	-16.0	59.7	19.7	59.5	20.7	59.4	21.8	59.3	22.3	59.2	22.8	59.0	23.9	58.8	24.9
	-12.0	-13.0	64.6	20.9	64.3	21.9	64.1	22.9	64.0	23.4	63.8	23.9	63.6	24.9	63.3	25.9
	-9.0	-10.0	69.7	22.0	69.4	23.0	69.1	24.0	69.0	24.5	68.8	25.0	68.5	26.0	68.1	27.0
	-7.0	-8.0	73.3	22.7	73.0	23.7	72.6	24.7	72.4	25.2	72.2	25.7	71.9	26.6	71.5	27.6
	-5.0	-6.0	77.0	23.4	76.6	24.4	76.2	25.4	76.0	25.9	75.8	26.4	75.4	27.3	74.9	28.3
99.0	-3.0	-4.0	80.9	24.2	80.4	25.1	79.9	26.1	79.7	26.6	79.5	27.0	79.0	28.0	78.5	29.0
	-1.0	-2.0	84.8	24.9	84.2	25.8	83.7	26.8	83.5	27.3	83.2	27.7	82.6	28.7	79.2	28.0
(110%)	0.0	-1.0	86.7	25.2	86.2	26.2	85.6	27.1	85.4	27.6	85.1	28.1	84.5	29.0	79.2	27.4
	2.0	1.0	90.8	25.9	90.2	26.9	89.5	27.8	89.2	28.3	88.9	28.8	85.8	28.4	79.2	26.1
	5.0	4.0	96.9	27.0	96.2	27.9	95.5	28.9	95.2	29.4	92.4	28.6	85.8	26.4	79.2	24.3
	7.0	6.0	101	27.7	100	28.7	99.0	29.3	95.7	28.3	92.4	27.2	85.8	25.2	79.2	23.2
	9.0	7.8	104	28.4	104	29.3	99.0	28.1	95.7	27.1	92.4	26.1	85.8	24.1	79.2	22.2
	12.0	10.6	110	29.4	105	28.2	99.0	26.3	95.7	25.4	92.4	24.4	85.8	22.6	79.2	20.8
	15.0	13.5	112	28.1	105	26.3	99.0	24.6	95.7	23.7	92.4	22.8	85.8	21.1	79.2	19.4

TC : Total Capacity kW.

PI : Power Input kW (Compressor + Outdoor fan motor).

The data is based on the following conditions. Pipe length : 7.5 m; Height difference : 0 m.

MODEL SELECTION

■ MODELS : AJ*126L + AJ*126U

• CAPACITY : 80.0kW (28HP)

Total rated heating capacity of indoor unit	Outdoor temperature		Indoor temperature													
			16°CDB		18°CDB		20°CDB		21°CDB		22°CDB		24°CDB		26°CDB	
	(°CDB)	(°CWB)	TC	PI	TC	PI	TC	PI	TC	PI	TC	PI	TC	PI	TC	PI
	-19.3	-20.0	53.7	19.0	53.6	20.1	53.5	21.1	53.5	21.7	53.4	22.2	53.3	23.3	53.2	24.4
	-15.0	-16.0	59.5	20.6	59.4	21.7	59.2	22.7	59.1	23.3	59.0	23.8	58.8	24.8	58.6	25.8
	-12.0	-13.0	64.3	21.9	64.1	22.9	63.8	23.9	63.7	24.4	63.6	24.9	63.3	25.9	63.1	26.9
	-9.0	-10.0	69.4	23.0	69.1	24.0	68.8	25.0	68.6	25.5	68.5	26.0	68.1	27.0	67.8	28.0
	-7.0	-8.0	72.9	23.8	72.6	24.8	72.2	25.8	72.0	26.2	71.8	26.7	71.5	27.7	71.1	28.7
	-5.0	-6.0	76.6	24.6	76.2	25.5	75.7	26.5	75.5	27.0	75.3	27.5	74.9	28.4	72.0	27.9
90.0	-3.0	-4.0	80.3	25.3	79.8	26.3	79.4	27.2	79.1	27.7	78.9	28.2	78.0	28.9	72.0	26.6
	-1.0	-2.0	84.1	26.1	83.6	27.0	83.0	28.0	82.8	28.5	82.5	28.9	78.0	27.6	72.0	25.4
(100%)	0.0	-1.0	86.0	26.5	85.5	27.4	84.9	28.4	84.6	28.8	84.0	29.1	78.0	26.9	72.0	24.8
	2.0	1.0	89.9	27.2	89.3	28.2	88.7	29.1	87.0	28.8	84.0	27.7	78.0	25.7	72.0	23.6
	5.0	4.0	95.9	28.4	95.2	29.3	90.0	27.8	87.0	26.8	84.0	25.8	78.0	23.9	72.0	22.0
	7.0	6.0	99.9	29.2	96.0	28.4	90.0	26.5	87.0	25.6	84.0	24.6	78.0	22.8	72.0	21.0
	9.0	7.8	102	29.0	96.0	27.2	90.0	25.4	87.0	24.5	84.0	23.6	78.0	21.9	72.0	20.1
	12.0	10.6	102	27.2	96.0	25.4	90.0	23.8	87.0	22.9	84.0	22.1	78.0	20.5	72.0	18.9
	15.0	13.5	102	25.4	96.0	23.8	90.0	22.2	87.0	21.4	84.0	20.7	78.0	19.1	72.0	17.6
	-19.3	-20.0	53.6	20.0	53.5	21.1	53.4	22.2	53.4	22.8	53.3	23.3	53.2	24.4	53.1	25.5
	-15.0	-16.0	59.4	21.8	59.2	22.8	59.0	23.9	58.9	24.4	58.8	24.9	58.6	25.9	58.4	27.0
	-12.0	-13.0	64.0	23.1	63.8	24.1	63.6	25.1	63.4	25.6	63.3	26.1	63.0	27.1	62.8	28.1
	-9.0	-10.0	69.0	24.3	68.7	25.3	68.4	26.3	68.2	26.7	68.0	27.2	67.7	28.2	64.8	27.5
	-7.0	-8.0	72.5	25.1	72.1	26.1	71.7	27.0	71.5	27.5	71.3	28.0	70.2	28.5	64.8	26.3
	-5.0	-6.0	76.0	25.9	75.6	26.9	75.1	27.8	74.9	28.3	74.7	28.8	70.2	27.2	64.8	25.1
81.0	-3.0	-4.0	79.6	26.7	79.1	27.7	78.6	28.6	78.3	29.0	75.6	28.0	70.2	25.9	64.8	23.9
	-1.0	-2.0	83.3	27.5	82.8	28.5	81.0	28.7	78.3	27.7	75.6	26.7	70.2	24.7	64.8	22.8
(90%)	0.0	-1.0	85.2	28.0	84.6	28.9	81.0	28.0	78.3	27.0	75.6	26.1	70.2	24.2	64.8	22.3
	2.0	1.0	88.9	28.8	86.4	28.6	81.0	26.7	78.3	25.8	75.6	24.9	70.2	23.0	64.8	21.2
	5.0	4.0	91.8	28.4	86.4	26.6	81.0	24.9	78.3	24.0	75.6	23.1	70.2	21.5	64.8	19.8
	7.0	6.0	91.8	27.0	86.4	25.4	81.0	23.7	78.3	22.9	75.6	22.1	70.2	20.5	64.8	18.9
	9.0	7.8	91.8	25.9	86.4	24.3	81.0	22.7	78.3	21.9	75.6	21.2	70.2	19.6	64.8	18.1
	12.0	10.6	91.8	24.3	86.4	22.8	81.0	21.3	78.3	20.5	75.6	19.8	70.2	18.4	64.8	17.0
	15.0	13.5	91.8	22.7	86.4	21.3	81.0	19.9	78.3	19.2	75.6	18.5	70.2	17.2	64.8	15.9
	-19.3	-20.0	53.5	21.4	53.4	22.5	53.3	23.6	53.3	24.1	53.2	24.6	53.1	25.7	53.0	26.8
	-15.0	-16.0	59.1	23.2	58.9	24.2	58.8	25.3	58.7	25.8	58.6	26.3	58.4	27.3	57.6	27.9
	-12.0	-13.0	63.7	24.5	63.4	25.5	63.2	26.5	63.1	27.0	62.9	27.5	62.4	28.3	57.6	26.2
	-9.0	-10.0	68.5	25.9	68.2	26.8	67.9	27.8	67.7	28.3	67.2	28.5	62.4	26.5	57.6	24.4
	-7.0	-8.0	71.8	26.7	71.5	27.7	71.1	28.6	69.6	28.2	67.2	27.3	62.4	25.3	57.6	23.3
	-5.0	-6.0	75.3	27.6	74.8	28.5	72.0	27.9	69.6	27.0	67.2	26.0	62.4	24.1	57.6	22.3
72.0	-3.0	-4.0	78.7	28.5	76.8	28.5	72.0	26.6	69.6	25.7	67.2	24.8	62.4	23.0	57.6	21.2
	-1.0	-2.0	81.6	28.9	76.8	27.1	72.0	25.4	69.6	24.5	67.2	23.7	62.4	22.0	57.6	20.3
(80%)	0.0	-1.0	81.6	28.2	76.8	26.5	72.0	24.8	69.6	23.9	67.2	23.1	62.4	21.4	57.6	19.8
	2.0	1.0	81.6	26.9	76.8	25.3	72.0	23.6	69.6	22.8	67.2	22.0	62.4	20.4	57.6	18.9
	5.0	4.0	81.6	25.1	76.8	23.5	72.0	22.0	69.6	21.3	67.2	20.5	62.4	19.1	57.6	17.6
	7.0	6.0	81.6	23.9	76.8	22.4	72.0	21.0	69.6	20.3	67.2	19.6	62.4	18.2	57.6	16.8
	9.0	7.8	81.6	22.9	76.8	21.5	72.0	20.1	69.6	19.4	67.2	18.8	62.4	17.4	57.6	16.1
	12.0	10.6	81.6	21.4	76.8	20.1	72.0	18.9	69.6	18.2	67.2	17.6	62.4	16.3	57.6	15.1
	15.0	13.5	81.6	20.0	76.8	18.8	72.0	17.6	69.6	17.0	67.2	16.5	62.4	15.3	57.6	14.1
	-19.3	-20.0	53.3	23.1	53.2	24.2	53.1	25.3	53.1	25.8	53.0	26.3	52.9	27.4	50.4	26.6
	-15.0	-16.0	58.8	25.0	58.6	26.0	58.4	27.1	58.3	27.6	58.2	28.1	54.6	26.5	50.4	24.5
	-12.0	-13.0	63.2	26.4	63.0	27.4	62.7	28.4	60.9	27.7	58.8	26.7	54.6	24.8	50.4	22.9
	-9.0	-10.0	67.8	27.8	67.2	28.5	63.0	26.7	60.9	25.8	58.8	25.0	54.6	23.2	50.4	21.4
	-7.0	-8.0	71.0	28.7	67.2	27.3	63.0	25.5	60.9	24.7	58.8	23.8	54.6	22.1	50.4	20.5
	-5.0	-6.0	71.4	27.7	67.2	26.0	63.0	24.4	60.9	23.5	58.8	22.7	54.6	21.1	50.4	19.5
63.0	-3.0	-4.0	71.4	26.4	67.2	24.8	63.0	23.2	60.9	22.5	58.8	21.7	54.6	20.1	50.4	18.6
	-1.0	-2.0	71.4	25.2	67.2	23.7	63.0	22.2	60.9	21.4	58.8	20.7	54.6	19.2	50.4	17.8
(70%)	0.0	-1.0	71.4	24.6	67.2	23.1	63.0	21.6	60.9	20.9	58.8	20.2	54.6	18.8	50.4	17.4
	2.0	1.0	71.4	23.4	67.2	22.0	63.0	20.6	60.9	20.0	58.8	19.3	54.6	17.9	50.4	16.6
	5.0	4.0	71.4	21.8	67.2	20.5	63.0	19.2	60.9	18.6	58.8	18.0	54.6	16.7	50.4	15.4
	7.0	6.0	71.4	20.8	67.2	19.6	63.0	18.4	60.9	17.7	58.8	17.1	54.6	15.9	50.4	14.8
	9.0	7.8	71.4	20.0	67.2	18.8	63.0	17.6	60.9	17.0	58.8	16.4	54.6	15.3	50.4	14.2
	12.0	10.6	71.4	18.7	67.2	17.6	63.0	16.5	60.9	16.0	58.8	15.4	54.6	14.3	50.4	13.3
	15.0	13.5	71.4	17.5	67.2	16.5	63.0	15.4	60.9	14.9	58.8	14.4	54.6	13.4	50.4	12.5
	-19.3	-20.0	53.1	25.4	53.0	26.5	52.9	27.5	52.2	27.5	50.4	26.6	46.8	24.7	43.2	22.9
	-15.0	-16.0	58.4	27.4	57.6	27.9	54.0	26.2	52.2	25.3	50.4	24.5	46.8	22.8	43.2	21.1
	-12.0	-13.0	61.2	27.8	57.6	26.2	54.0	24.5	52.2	23.7	50.4	22.9	46.8	21.3	43.2	19.7
	-9.0	-10.0	61.2	26.0	57.6	24.4	54.0	22.9	52.2	22.2	50.4	21.4	46.8	19.9	43.2	18.4
	-7.0	-8.0	61.2	24.8	57.6	23.3	54.0	21.9	52.2	21.2	50.4	20.5	46.8	19.0	43.2	17.6
	-5.0	-6.0	61.2	23.7	57.6	22.3	54.0	20.9	52.2	20.2	50.4	19.5	46.8	18.2	43.2	16.8
54.0	-3.0	-4.0	61.2	22.6	57.6	21.2	54.0	19.9	52.2	19.3	50.4	18.6	46.8	17.3	43.2	16.1
	-1.0	-2.0	61.2	21.5	57.6	20.3	54.0	19.0	52.2	18.4	50.4	17.8	46.8	16.5	43.2	15.3
(60%)	0.0	-1.0	61.2	21.0	57.6	19.8	54.0	18.6	52.2	18.0	50.4	17.4	46.8	16.2	43.2	15.0
	2.0	1.0	61.2	20.1	57.6	18.9	54.0	17.7	52.2	17.1	50.4	16.6	46.8	15.4	43.2	14.3
	5.0	4.0	61.2	18.7	57.6	17.6	54.0	16.5	52.2	16.0	50.4	15.4	46.8	14.4	43.2	13.3
	7.0	6.0	61.2	17.8	57.6	16.8	54.0	15.8	52.2	15.3	50.4	14.8	46.8	13.7	43.2	12.7
	9.0	7.8	61.2	17.1	57.6	16.1	54.0	15.1	52.2	14.6	50.4	14.2	46.8	13.2	43.2	12.2
	12.0	10.6	61.2	16.0	57.6	15.1	54.0	14.2	52.2	13.7	50.4	13.3	46.8	12.4	43.2	11.5
	15.0	13.5	61.2	15.0	57.6	14.1	54.0	13.3	52.2	12.9	50.4	12.5	46.8	11.6	43.2	10.8
	-19.3	-20.0	51.0	26.9	48.0	25.3	45.0	23.8	43.5	23.0	42.0	22.3	39.0	20.7	36.0	19.2
	-15.0	-16.0	51.0	24.8	48.0	23.3	45.0	21.9	43.5	21.2	42.0	20.5	39.0	19.1	36.0	17.7
	-12.0	-13.0	51.0	23.2	48.0	21.9	45.0	20.5	43.5	19.9	42.0	19.2	39.0	17.9	36.0	16.6
	-9.0	-10.0	51.0	21.7	48.0	20.4	45.0	19.2	43.5	18.6	42.0	17.9	39.0	16.7	36.0	15.5
	-7.0	-8.0	51.0	20.7	48.0	19.5	45.0	18.3	43.5	17.7	42.0	17.1	39.0	16.0	36.0	14.8
	-5.0	-6.0	51.0	19.7	48.0	18.6	45.0	17.5	43.5	16.9	42.0	16.4	39.0	15.3	36.0	14.2
45.0	-3.0	-4.0	51.0	18.8	48.0	17.8	45.0	16.7	43.5	16.2	42.0	15.6	39.0	14.6	36.0	13.5
	-1.0	-2.0	51.0	18.0	48.0	17.0	45.0	15.9	43.5	15.4	42.0	14.9	39.0	13.9	36.0	12.9
(50%)	0.0	-1.0	51.0	17.6	48.0	16.6	45.0	15.6	43.5	15.1	42.0	14.6	39.0	13.6	36.0	12.6
	2.0	1.0	51.0	16.8	48.0	15.8	45.0	14.9	43.5	14.4	42.0	13.9	39.0	13.0	36.0	12.1
	5.0	4.0	51.0	15.6	48.0	14.7	45.0	13.9	43.5	13.4	42.0	13.0	39.0	12.1	36.0	11.3
	7.0	6.0	51.0	14.9	48.0	14.1	45.0	13.2	43.5	12.8	42.0	12.4	39.0	11.6	36.0	10.8
	9.0	7.8	51.0	14.3	48.0	13.5	45.0	12.7	43.5	12.3	42.0	11.9	39.0	11.1	36.0	10.4
	12.0	10.6	51.0	13.4	48.0	12.7	45.0	11.9	43.5	11.6	42.0	11.2	39.0	10.5	36.0	9.75
	15.0	13.5	51.0	12.6	48.0	11.9	45.0	11.2	43.5	10.9	42.0	10.5	39.0	9.84	36.0	9.17

TC : Total Capacity kW.

PI : Power Input kW (Compressor + Outdoor fan motor).

The data is based on the following conditions. Pipe length : 7.5 m; Height difference : 0 m.

HEATING CAPACITY

■ MODELS : AJ*A90L + AJ*A90U + AJ*A90U

• CAPACITY : 84.0kW (30HP)

Total rated heating capacity of indoor unit	Outdoor temperature		Indoor temperature													
			16°CDB		18°CDB		20°CDB		21°CDB		22°CDB		24°CDB		26°CDB	
	(°CDB)	(°CWB)	TC	PI	TC	PI	TC	PI	TC	PI	TC	PI	TC	PI	TC	PI
	-19.3	-20.0	56.8	15.3	56.5	16.3	56.3	17.4	56.1	17.9	56.0	18.4	55.8	19.4	55.5	20.4
	-15.0	-16.0	63.2	16.7	62.9	17.7	62.6	18.7	62.4	19.2	62.3	19.7	61.9	20.7	61.6	21.6
	-12.0	-13.0	68.6	17.7	68.2	18.7	67.8	19.6	67.6	20.1	67.4	20.6	67.0	21.5	66.6	22.5
	-9.0	-10.0	74.4	18.6	73.9	19.6	73.4	20.5	73.2	21.0	73.0	21.4	72.5	22.4	72.0	23.3
	-7.0	-8.0	78.4	19.2	77.9	20.1	77.4	21.1	77.1	21.5	76.9	22.0	76.3	22.9	75.8	23.9
	-5.0	-6.0	82.6	19.8	82.0	20.7	81.5	21.6	81.2	22.1	80.9	22.6	80.3	23.5	79.7	24.4
141	-3.0	-4.0	86.9	20.4	86.3	21.3	85.7	22.2	85.4	22.6	85.0	23.1	84.4	24.0	83.8	24.9
	-1.0	-2.0	91.4	20.9	90.7	21.8	90.0	22.7	89.7	23.2	89.3	23.6	88.6	24.5	87.9	25.4
(150%)	0.0	-1.0	93.6	21.2	92.9	22.1	92.2	23.0	91.9	23.4	91.5	23.9	90.8	24.8	90.0	25.7
	2.0	1.0	98.3	21.7	97.5	22.6	96.7	23.5	96.3	24.0	95.9	24.4	95.1	25.3	94.3	26.2
	5.0	4.0	105	22.5	104	23.4	103	24.3	103	24.8	102	25.2	101	26.1	100	27.0
	7.0	6.0	110	23.0	109	23.9	108	24.8	107	25.3	107	25.7	106	26.7	105	27.6
	9.0	7.8	114	23.5	113	24.4	112	25.3	112	25.8	111	26.2	110	27.1	109	28.1
	12.0	10.6	121	24.2	120	25.2	119	26.1	118	26.5	118	27.0	117	27.9	113	27.7
	15.0	13.5	129	25.0	127	26.0	126	26.9	126	27.4	125	27.8	122	28.2	113	25.9
	-19.3	-20.0	56.7	15.8	56.4	16.8	56.2	17.8	56.0	18.3	55.9	18.8	55.7	19.9	55.4	20.9
	-15.0	-16.0	63.1	17.2	62.8	18.2	62.4	19.2	62.3	19.6	62.1	20.1	61.8	21.1	61.4	22.1
	-12.0	-13.0	68.4	18.2	68.0	19.2	67.6	20.1	67.4	20.6	67.2	21.1	66.8	22.0	66.4	23.0
	-9.0	-10.0	74.1	19.2	73.7	20.1	73.2	21.0	73.0	21.5	72.7	22.0	72.2	22.9	71.8	23.8
	-7.0	-8.0	78.1	19.8	77.6	20.7	77.1	21.6	76.8	22.1	76.6	22.5	76.0	23.5	75.5	24.4
	-5.0	-6.0	82.3	20.4	81.7	21.3	81.1	22.2	80.8	22.7	80.5	23.1	79.9	24.0	79.4	24.9
132	-3.0	-4.0	86.5	20.9	85.9	21.9	85.3	22.8	85.0	23.2	84.6	23.7	84.0	24.6	83.3	25.5
	-1.0	-2.0	90.9	21.5	90.2	22.4	89.5	23.3	89.2	23.8	88.9	24.2	88.1	25.1	87.4	26.0
(140%)	0.0	-1.0	93.2	21.8	92.4	22.7	91.7	23.6	91.4	24.1	91.0	24.5	90.3	25.4	89.5	26.3
	2.0	1.0	97.7	22.4	96.9	23.3	96.1	24.2	95.8	24.6	95.4	25.1	94.6	26.0	93.8	26.9
	5.0	4.0	104	23.2	103	24.1	102	25.0	102	25.5	102	25.9	101	26.8	100	27.7
	7.0	6.0	109	23.8	108	24.7	107	25.6	107	26.0	106	26.5	105	27.4	104	28.3
	9.0	7.8	113	24.3	112	25.2	111	26.1	111	26.5	110	27.0	109	27.9	105	27.5
	12.0	10.6	120	25.1	119	26.0	118	26.9	117	27.4	117	27.8	114	28.0	105	25.7
	15.0	13.5	127	25.9	126	26.9	125	27.8	124	28.2	123	28.4	114	26.2	105	24.0
	-19.3	-20.0	56.5	16.3	56.3	17.3	56.0	18.3	55.9	18.8	55.8	19.3	55.5	20.3	55.3	21.4
	-15.0	-16.0	62.9	17.7	62.6	18.7	62.3	19.7	62.1	20.2	61.9	20.7	61.6	21.6	61.2	22.6
	-12.0	-13.0	68.2	18.8	67.8	19.7	67.4	20.7	67.2	21.1	67.0	21.6	66.6	22.6	66.2	23.5
	-9.0	-10.0	73.8	19.8	73.4	20.7	72.9	21.6	72.7	22.1	72.4	22.5	71.9	23.5	71.4	24.4
	-7.0	-8.0	77.8	20.4	77.3	21.3	76.7	22.2	76.5	22.7	76.2	23.2	75.7	24.1	75.1	25.0
	-5.0	-6.0	81.9	21.0	81.3	21.9	80.7	22.8	80.4	23.3	80.1	23.7	79.5	24.7	78.9	25.6
122	-3.0	-4.0	86.1	21.6	85.4	22.5	84.8	23.4	84.5	23.9	84.2	24.3	83.5	25.2	82.9	26.1
	-1.0	-2.0	90.4	22.2	89.7	23.1	89.0	24.0	88.7	24.5	88.3	24.9	87.6	25.8	86.9	26.7
(130%)	0.0	-1.0	92.6	22.5	91.9	23.4	91.1	24.3	90.8	24.8	90.4	25.2	89.7	26.1	88.9	27.0
	2.0	1.0	97.0	23.1	96.3	24.0	95.5	24.9	95.1	25.4	94.7	25.8	93.9	26.7	93.1	27.6
	5.0	4.0	103	24.0	103	24.9	102	25.8	101	26.3	101	26.7	100	27.6	98.3	27.9
	7.0	6.0	108	24.6	107	25.5	106	26.4	106	26.9	105	27.3	104	28.2	98.3	26.6
	9.0	7.8	112	25.2	111	26.1	110	27.0	110	27.4	109	27.9	106	27.7	98.3	25.5
	12.0	10.6	119	26.0	118	26.9	117	27.8	116	28.3	114	28.0	106	25.9	98.3	23.8
	15.0	13.5	126	26.9	125	27.9	122	28.2	118	27.2	114	26.2	106	24.2	98.3	22.2
	-19.3	-20.0	56.4	16.9	56.2	17.9	55.9	18.9	55.8	19.4	55.7	19.9	55.4	20.9	55.1	21.9
	-15.0	-16.0	62.7	18.4	62.4	19.3	62.0	20.3	61.9	20.8	61.7	21.3	61.4	22.2	61.0	23.2
	-12.0	-13.0	67.9	19.4	67.5	20.4	67.1	21.3	66.9	21.8	66.7	22.3	66.3	23.2	65.9	24.1
	-9.0	-10.0	73.5	20.4	73.0	21.4	72.5	22.3	72.3	22.8	72.1	23.2	71.6	24.1	71.1	25.1
	-7.0	-8.0	77.4	21.1	76.8	22.0	76.3	22.9	76.1	23.4	75.8	23.9	75.3	24.8	74.7	25.7
	-5.0	-6.0	81.4	21.8	80.8	22.7	80.2	23.6	79.9	24.0	79.6	24.5	79.1	25.4	78.5	26.3
113	-3.0	-4.0	85.5	22.4	84.9	23.3	84.3	24.2	83.9	24.7	83.6	25.1	83.0	26.0	82.3	26.9
	-1.0	-2.0	89.8	23.1	89.1	23.9	88.4	24.8	88.0	25.3	87.7	25.7	87.0	26.6	86.3	27.5
(120%)	0.0	-1.0	91.9	23.4	91.2	24.3	90.5	25.2	90.1	25.6	89.7	26.0	89.0	26.9	88.3	27.8
	2.0	1.0	96.3	24.0	95.5	24.9	94.7	25.8	94.3	26.2	93.9	26.7	93.1	27.5	90.7	27.6
	5.0	4.0	103	25.0	102	25.8	101	26.7	100	27.2	100	27.6	98.3	27.9	90.7	25.7
	7.0	6.0	107	25.6	106	26.5	105	27.4	105	27.8	104	28.3	98.3	26.6	90.7	24.5
	9.0	7.8	111	26.2	110	27.1	109	28.0	109	28.4	105	27.5	98.3	25.5	90.7	23.4
	12.0	10.6	118	27.1	117	28.0	113	27.7	109	26.7	105	25.7	98.3	23.8	90.7	21.9
	15.0	13.5	125	28.1	120	27.7	113	25.9	109	24.9	105	24.0	98.3	22.2	90.7	20.5
	-19.3	-20.0	56.2	17.5	56.0	18.6	55.7	19.6	55.6	20.1	55.5	20.6	55.2	21.6	55.0	22.6
	-15.0	-16.0	62.5	19.1	62.1	20.1	61.8	21.0	61.6	21.5	61.5	22.0	61.1	23.0	60.8	23.9
	-12.0	-13.0	67.6	20.2	67.2	21.1	66.8	22.1	66.6	22.5	66.4	23.0	66.0	24.0	65.6	24.9
	-9.0	-10.0	73.1	21.3	72.6	22.2	72.1	23.1	71.9	23.6	71.6	24.0	71.2	24.9	70.7	25.8
	-7.0	-8.0	76.9	22.0	76.4	22.9	75.8	23.8	75.6	24.2	75.3	24.7	74.8	25.6	74.2	26.5
	-5.0	-6.0	80.8	22.7	80.3	23.5	79.7	24.4	79.4	24.9	79.1	25.3	78.5	26.2	77.9	27.1
103	-3.0	-4.0	84.9	23.3	84.2	24.2	83.6	25.1	83.3	25.6	83.0	26.0	82.3	26.9	81.7	27.8
	-1.0	-2.0	89.0	24.0	88.3	24.9	87.6	25.8	87.3	26.2	86.9	26.7	86.2	27.5	83.2	27.2
(110%)	0.0	-1.0	91.1	24.3	90.4	25.2	89.7	26.1	89.3	26.5	89.0	27.0	88.2	27.9	83.2	26.5
	2.0	1.0	95.4	25.0	94.6	25.9	93.8	26.8	93.4	27.2	93.0	27.7	90.1	27.5	83.2	25.3
	5.0	4.0	101	26.0	101	26.9	100	27.8	99.7	28.2	97.0	27.6	90.1	25.5	83.2	23.5
	7.0	6.0	106	26.7	105	27.6	103	28.2	100	27.2	97.0	26.2	90.1	24.3	83.2	22.4
	9.0	7.8	110	27.4	109	28.2	103	27.0	100	26.1	97.0	25.1	90.1	23.3	83.2	21.4
	12.0	10.6	116	28.4	110	27.1	103	25.3	100	24.4	97.0	23.5	90.1	21.8	83.2	20.1
	15.0	13.5	117	26.9	110	25.2	103	23.6	100	22.8	97.0	21.9	90.1	20.3	83.2	18.7

TC : Total Capacity kW.

PI : Power Input kW (Compressor + Outdoor fan motor).

The data is based on the following conditions. Pipe length : 7.5 m; Height difference : 0 m.

MODEL SELECTION

■ MODELS : AJ*A90L + AJ*A90U + AJ*A90U

• CAPACITY : 84.0kW (30HP)

Total rated heating capacity of indoor unit	Outdoor temperature		Indoor temperature													
			16°CDB		18°CDB		20°CDB		21°CDB		22°CDB		24°CDB		26°CDB	
	(°CDB)	(°CWB)	TC	PI	TC	PI	TC	PI	TC	PI	TC	PI	TC	PI	TC	PI
	-19.3	-20.0	56.0	18.4	55.8	19.4	55.5	20.4	55.4	20.9	55.3	21.4	55.0	22.4	54.8	23.4
	-15.0	-16.0	62.2	20.0	61.8	20.9	61.5	21.9	61.3	22.4	61.2	22.8	60.8	23.8	60.5	24.8
	-12.0	-13.0	67.2	21.1	66.8	22.0	66.4	23.0	66.2	23.4	66.0	23.9	65.6	24.8	65.2	25.8
	-9.0	-10.0	72.6	22.2	72.1	23.1	71.6	24.1	71.4	24.5	71.1	25.0	70.7	25.9	70.2	26.8
	-7.0	-8.0	76.3	23.0	75.8	23.9	75.3	24.8	75.0	25.2	74.7	25.7	74.2	26.6	73.6	27.4
	-5.0	-6.0	80.2	23.7	79.6	24.6	79.0	25.5	78.7	25.9	78.4	26.4	77.8	27.2	75.6	27.2
94.5	-3.0	-4.0	84.1	24.4	83.5	25.3	82.8	26.2	82.5	26.6	82.2	27.0	81.5	27.9	75.6	25.9
	-1.0	-2.0	88.1	25.1	87.5	26.0	86.8	26.9	86.4	27.3	86.1	27.8	81.9	26.8	75.6	24.7
(100%)	0.0	-1.0	90.2	25.5	89.5	26.4	88.7	27.2	88.4	27.7	88.0	28.1	81.9	26.1	75.6	24.1
	2.0	1.0	94.3	26.2	93.6	27.1	92.8	28.0	91.4	27.9	88.2	26.9	81.9	24.9	75.6	22.9
	5.0	4.0	100	27.3	99.8	28.2	94.5	26.8	91.3	25.9	88.2	25.0	81.9	23.1	75.6	21.3
	7.0	6.0	104	28.1	100	27.3	94.5	25.5	91.3	24.7	88.2	23.8	81.9	22.0	75.6	20.3
	9.0	7.8	107	27.9	100	26.2	94.5	24.4	91.3	23.6	88.2	22.8	81.9	21.1	75.6	19.5
	12.0	10.6	107	26.1	100	24.5	94.5	22.9	91.4	22.1	88.2	21.3	81.9	19.8	75.6	18.2
	15.0	13.5	107	24.3	100	22.8	94.5	21.3	91.3	20.6	88.2	19.9	81.9	18.5	75.6	17.1
	-19.3	-20.0	55.8	19.4	55.5	20.4	55.3	21.4	55.2	21.9	55.0	22.4	54.8	23.4	54.5	24.3
	-15.0	-16.0	61.8	21.0	61.5	22.0	61.1	22.9	61.0	23.4	60.8	23.9	60.5	24.8	60.1	25.8
	-12.0	-13.0	66.7	22.2	66.3	23.1	65.9	24.1	65.7	24.5	65.5	25.0	65.1	25.9	64.7	26.8
	-9.0	-10.0	72.0	23.4	71.5	24.3	71.0	25.2	70.8	25.6	70.5	26.1	70.1	27.0	68.0	27.0
	-7.0	-8.0	75.6	24.2	75.1	25.1	74.6	25.9	74.3	26.4	74.0	26.8	73.5	27.7	68.0	25.7
	-5.0	-6.0	79.4	24.9	78.8	25.8	78.2	26.7	77.9	27.1	77.6	27.6	73.7	26.5	68.0	24.5
85.1	-3.0	-4.0	83.2	25.7	82.5	26.6	81.9	27.4	81.6	27.9	79.4	27.2	73.7	25.3	68.0	23.3
	-1.0	-2.0	87.1	26.5	86.4	27.3	85.1	27.8	82.2	26.9	79.4	25.9	73.7	24.1	68.0	22.2
(90%)	0.0	-1.0	89.1	26.9	88.3	27.7	85.1	27.2	82.2	26.2	79.4	25.3	73.7	23.5	68.0	21.7
	2.0	1.0	93.1	27.6	90.7	27.6	85.1	25.9	82.2	25.0	79.4	24.1	73.7	22.4	68.0	20.7
	5.0	4.0	96.4	27.4	90.7	25.7	85.1	24.0	82.2	23.2	79.4	22.4	73.7	20.8	68.0	19.2
	7.0	6.0	96.4	26.1	90.7	24.5	85.1	22.9	82.2	22.1	79.4	21.4	73.7	19.8	68.0	18.3
	9.0	7.8	96.4	25.0	90.7	23.4	85.1	21.9	82.2	21.2	79.4	20.5	73.7	19.0	68.0	17.6
	12.0	10.6	96.4	23.3	90.7	21.9	85.1	20.5	82.2	19.8	79.4	19.1	73.7	17.8	68.0	16.5
	15.0	13.5	96.4	21.8	90.7	20.5	85.1	19.2	82.2	18.5	79.4	17.9	73.7	16.6	68.0	15.4
	-19.3	-20.0	55.5	20.6	55.2	21.6	55.0	22.6	54.8	23.1	54.7	23.6	54.4	24.5	54.2	25.5
	-15.0	-16.0	61.4	22.3	61.0	23.2	60.7	24.2	60.5	24.7	60.3	25.1	60.0	26.1	59.6	27.0
	-12.0	-13.0	66.2	23.6	65.8	24.5	65.3	25.4	65.1	25.8	64.9	26.3	64.5	27.2	60.5	25.8
	-9.0	-10.0	71.2	24.8	70.8	25.7	70.3	26.6	70.0	27.0	69.8	27.5	65.5	26.0	60.5	24.0
	-7.0	-8.0	74.7	25.6	74.2	26.5	73.7	27.4	73.1	27.6	70.6	26.7	65.5	24.8	60.5	22.9
	-5.0	-6.0	78.3	26.4	77.8	27.3	75.6	27.2	73.1	26.3	70.6	25.4	65.5	23.6	60.5	21.8
75.6	-3.0	-4.0	82.0	27.3	80.6	27.7	75.6	25.9	73.1	25.1	70.6	24.2	65.5	22.5	60.5	20.8
	-1.0	-2.0	85.7	28.1	80.6	26.4	75.6	24.7	73.1	23.9	70.6	23.0	65.5	21.4	60.5	19.8
(80%)	0.0	-1.0	85.7	27.4	80.6	25.7	75.6	24.1	73.1	23.3	70.6	22.5	65.5	20.9	60.5	19.3
	2.0	1.0	85.7	26.1	80.6	24.5	75.6	22.9	73.1	22.2	70.6	21.4	65.5	19.9	60.5	18.4
	5.0	4.0	85.7	24.2	80.6	22.8	75.6	21.3	73.1	20.6	70.6	19.9	65.5	18.5	60.5	17.1
	7.0	6.0	85.7	23.1	80.6	21.7	75.6	20.3	73.1	19.7	70.6	19.0	65.5	17.7	60.5	16.4
	9.0	7.8	85.7	22.1	80.6	20.8	75.6	19.5	73.1	18.8	70.6	18.2	65.5	16.9	60.5	15.7
	12.0	10.6	85.7	20.7	80.6	19.4	75.6	18.2	73.1	17.6	70.6	17.0	65.5	15.9	60.5	14.7
	15.0	13.5	85.7	19.3	80.6	18.2	75.6	17.1	73.1	16.5	70.6	15.9	65.5	14.9	60.5	13.8
	-19.3	-20.0	55.1	22.1	54.8	23.1	54.6	24.1	54.4	24.6	54.3	25.1	54.0	26.1	52.9	26.4
	-15.0	-16.0	60.8	23.9	60.4	24.9	60.1	25.8	59.9	26.3	59.7	26.7	57.3	26.2	52.9	24.2
	-12.0	-13.0	65.4	25.3	65.0	26.2	64.6	27.1	63.9	27.2	61.7	26.3	57.3	24.4	52.9	22.6
	-9.0	-10.0	70.3	26.6	69.8	27.5	66.2	26.2	63.9	25.4	61.7	24.5	57.3	22.8	52.9	21.1
	-7.0	-8.0	73.6	27.5	70.6	26.7	66.2	25.0	63.9	24.2	61.7	23.3	57.3	21.7	52.9	20.1
	-5.0	-6.0	75.0	27.0	70.6	25.4	66.2	23.8	63.9	23.0	61.7	22.2	57.3	20.7	52.9	19.2
66.2	-3.0	-4.0	75.0	25.7	70.6	24.2	66.2	22.7	63.9	21.9	61.7	21.2	57.3	19.7	52.9	18.3
	-1.0	-2.0	75.0	24.5	70.6	23.0	66.2	21.6	63.9	20.9	61.7	20.2	57.3	18.8	52.9	17.4
(70%)	0.0	-1.0	75.0	23.9	70.6	22.5	66.2	21.1	63.9	20.4	61.7	19.7	57.3	18.3	52.9	17.0
	2.0	1.0	75.0	22.7	70.6	21.4	66.2	20.1	63.9	19.4	61.7	18.8	57.3	17.5	52.9	16.2
	5.0	4.0	75.0	21.2	70.6	19.9	66.2	18.7	63.9	18.1	61.7	17.5	57.3	16.3	52.9	15.1
	7.0	6.0	75.0	20.2	70.6	19.0	66.2	17.8	63.9	17.2	61.7	16.7	57.3	15.5	52.9	14.4
	9.0	7.8	75.0	19.3	70.6	18.2	66.2	17.1	63.9	16.5	61.7	16.0	57.3	14.9	52.9	13.8
	12.0	10.6	75.0	18.1	70.6	17.0	66.2	16.0	63.9	15.5	61.7	15.0	57.3	14.0	52.9	13.0
	15.0	13.5	75.0	16.9	70.6	15.9	66.2	15.0	63.9	14.5	61.7	14.0	57.3	13.1	52.9	12.2
	-19.3	-20.0	54.6	24.2	54.3	25.1	54.0	26.1	53.9	26.6	52.9	26.4	49.1	24.6	45.4	22.8
	-15.0	-16.0	60.0	26.0	59.7	27.0	56.7	25.9	54.8	25.1	52.9	24.2	49.1	22.5	45.4	20.9
	-12.0	-13.0	64.3	27.3	60.5	25.8	56.7	24.2	54.8	23.4	52.9	22.6	49.1	21.1	45.4	19.5
	-9.0	-10.0	64.3	25.5	60.5	24.0	56.7	22.5	54.8	21.8	52.9	21.1	49.1	19.6	45.4	18.2
	-7.0	-8.0	64.3	24.3	60.5	22.9	56.7	21.5	54.8	20.8	52.9	20.1	49.1	18.7	45.4	17.4
	-5.0	-6.0	64.3	23.1	60.5	21.8	56.7	20.5	54.8	19.8	52.9	19.2	49.1	17.9	45.4	16.6
56.7	-3.0	-4.0	64.3	22.0	60.5	20.8	56.7	19.5	54.8	18.9	52.9	18.3	49.1	17.0	45.4	15.8
	-1.0	-2.0	64.3	21.0	60.5	19.8	56.7	18.6	54.8	18.0	52.9	17.4	49.1	16.2	45.4	15.1
(60%)	0.0	-1.0	64.3	20.5	60.5	19.3	56.7	18.1	54.8	17.6	52.9	17.0	49.1	15.9	45.4	14.7
	2.0	1.0	64.3	19.5	60.5	18.4	56.7	17.3	54.8	16.8	52.9	16.2	49.1	15.1	45.4	14.0
	5.0	4.0	64.3	18.2	60.5	17.1	56.7	16.1	54.8	15.6	52.9	15.1	49.1	14.1	45.4	13.1
	7.0	6.0	64.3	17.3	60.5	16.3	56.7	15.4	54.8	14.9	52.9	14.4	49.1	13.5	45.4	12.5
	9.0	7.8	64.3	16.6	60.5	15.7	56.7	14.8	54.8	14.3	52.9	13.8	49.1	12.9	45.4	12.0
	12.0	10.6	64.3	15.6	60.5	14.7	56.7	13.8	54.8	13.4	52.9	13.0	49.1	12.1	45.4	11.3
	15.0	13.5	64.3	14.6	60.5	13.8	56.7	13.0	54.8	12.6	52.9	12.2	49.1	11.4	45.4	10.6
	-19.3	-20.0	53.5	26.7	50.4	25.2	47.3	23.7	45.7	22.9	44.1	22.2	41.0	20.7	37.8	19.2
	-15.0	-16.0	53.5	24.5	50.4	23.1	47.3	21.7	45.7	21.0	44.1	20.3	40.9	19.0	37.8	17.6
	-12.0	-13.0	53.6	22.9	50.4	21.6	47.3	20.3	45.7	19.6	44.1	19.0	40.9	17.7	37.8	16.5
	-9.0	-10.0	53.5	21.3	50.4	20.1	47.3	18.9	45.7	18.3	44.1	17.7	41.0	16.5	37.8	15.4
	-7.0	-8.0	53.5	20.3	50.4	19.2	47.3	18.0	45.7	17.5	44.1	16.9	41.0	15.8	37.8	14.7
	-5.0	-6.0	53.6	19.4	50.4	18.3	47.3	17.2	45.7	16.7	44.1	16.1	41.0	15.1	37.8	14.0
47.3	-3.0	-4.0	53.5	18.5	50.4	17.4	47.3	16.4	45.7	15.9	44.1	15.4	40.9	14.4	37.8	13.4
	-1.0	-2.0	53.5	17.6	50.4	16.6	47.3	15.6	45.7	15.2	44.1	14.7	40.9	13.7	37.8	12.8
(50%)	0.0	-1.0	53.6	17.2	50.4	16.2	47.3	15.3	45.7	14.8	44.1	14.3	41.0	13.4	37.8	12.5
	2.0	1.0	53.6	16.4	50.4	15.5	47.3	14.6	45.7	14.1	44.1	13.7	40.9	12.8	37.8	11.9
	5.0	4.0	53.6	15.3	50.4	14.4	47.3	13.6	45.7	13.2	44.1	12.8	41.0	12.0	37.8	11.2
	7.0	6.0	53.5	14.6	50.4	13.8	47.3	13.0	45.7	12.6	44.1	12.2	40.9	11.4	37.8	10.7
	9.0	7.8	53.6	14.0	50.4	13.2	47.3	12.5	45.7	12.1	44.1	11.7	41.0	11.0	37.8	10.3
	12.0	10.6	53.5	13.1	50.4	12.4	47.3	11.7	45.7	11.4	44.1	11.0	40.9	10.4	37.8	9.67
	15.0	13.5	53.5	12.3	50.4	11.7	47.3	11.0	45.7	10.7	44.1	10.4	40.9	9.73	37.8	9.10

TC : Total Capacity kW.

PI : Power Input kW (Compressor + Outdoor fan motor).

The data is based on the following conditions. Pipe length : 7.5 m; Height difference : 0 m.

■ MODELS : AJ*126L + AJ*A90U + AJ*A72U

• CAPACITY : 90.4kW (32HP)

Total rated heating capacity of indoor unit	Outdoor temperature		Indoor temperature													
			16°CDB		18°CDB		20°CDB		21°CDB		22°CDB		24°CDB		26°CDB	
	(°CDB)	(°CWB)	TC	PI	TC	PI	TC	PI	TC	PI	TC	PI	TC	PI	TC	PI
	-19.3	-20.0	61.2	17.1	61.0	18.2	60.8	19.4	60.7	20.0	60.6	20.5	60.4	21.7	60.2	22.8
	-15.0	-16.0	68.2	18.6	67.9	19.7	67.6	20.8	67.5	21.4	67.3	22.0	67.0	23.1	66.7	24.2
	-12.0	-13.0	74.0	19.7	73.6	20.8	73.3	21.9	73.1	22.4	72.9	23.0	72.5	24.0	72.1	25.1
	-9.0	-10.0	80.2	20.8	79.7	21.8	79.3	22.9	79.1	23.4	78.8	23.9	78.4	25.0	77.9	26.0
	-7.0	-8.0	84.5	21.4	84.0	22.5	83.5	23.5	83.3	24.0	83.0	24.6	82.5	25.6	82.0	26.6
	-5.0	-6.0	89.0	22.1	88.4	23.1	87.9	24.1	87.6	24.7	87.3	25.2	86.8	26.2	86.2	27.2
153	-3.0	-4.0	93.6	22.7	93.0	23.7	92.4	24.7	92.1	25.3	91.8	25.8	91.2	26.8	90.5	27.8
	-1.0	-2.0	98.4	23.3	97.7	24.3	97.1	25.3	96.7	25.9	96.4	26.4	95.7	27.4	95.0	28.4
(150%)	0.0	-1.0	100	23.6	100	24.6	99.4	25.6	99.1	26.2	98.7	26.7	98.0	27.7	97.2	28.7
	2.0	1.0	105	24.2	105	25.2	104	26.2	103	26.7	103	27.3	102	28.3	101	29.3
	5.0	4.0	113	25.1	112	26.1	111	27.1	111	27.6	110	28.1	109	29.2	108	30.2
	7.0	6.0	118	25.6	117	26.7	116	27.7	116	28.2	115	28.7	114	29.8	113	30.8
	9.0	7.8	123	26.2	122	27.2	121	28.2	120	28.8	120	29.3	119	30.3	118	31.3
	12.0	10.6	130	27.0	129	28.0	128	29.1	128	29.6	127	30.1	126	31.2	122	31.0
	15.0	13.5	138	27.9	137	28.9	136	30.0	135	30.5	135	31.0	132	31.6	122	29.0
	-19.3	-20.0	61.1	17.5	60.9	18.7	60.7	19.9	60.6	20.4	60.5	21.0	60.3	22.2	60.1	23.3
	-15.0	-16.0	68.0	19.1	67.8	20.3	67.5	21.4	67.3	21.9	67.2	22.5	66.9	23.6	66.6	24.7
	-12.0	-13.0	73.8	20.3	73.4	21.4	73.1	22.4	72.9	23.0	72.7	23.5	72.3	24.6	72.0	25.7
	-9.0	-10.0	79.9	21.3	79.5	22.4	79.0	23.5	78.8	24.0	78.6	24.5	78.1	25.6	77.7	26.6
	-7.0	-8.0	84.2	22.0	83.7	23.1	83.2	24.1	83.0	24.6	82.7	25.2	82.2	26.2	81.7	27.2
	-5.0	-6.0	88.7	22.7	88.1	23.7	87.6	24.8	87.3	25.3	87.0	25.8	86.4	26.8	85.8	27.9
142	-3.0	-4.0	93.2	23.4	92.6	24.4	92.0	25.4	91.7	25.9	91.4	26.4	90.8	27.5	90.1	28.5
	-1.0	-2.0	97.9	24.0	97.3	25.0	96.6	26.0	96.3	26.5	95.9	27.1	95.2	28.1	94.5	29.1
(140%)	0.0	-1.0	100	24.3	99.6	25.3	98.9	26.3	98.6	26.9	98.2	27.4	97.5	28.4	96.7	29.4
	2.0	1.0	105	24.9	104	26.0	103	27.0	103	27.5	102	28.0	102	29.0	101	30.0
	5.0	4.0	112	25.9	111	26.9	110	27.9	110	28.4	110	28.9	109	29.9	108	31.0
	7.0	6.0	117	26.5	116	27.5	115	28.5	115	29.0	114	29.6	114	30.6	113	31.6
	9.0	7.8	122	27.1	121	28.1	120	29.1	119	29.6	119	30.1	118	31.2	114	30.8
	12.0	10.6	129	27.9	128	29.0	127	30.0	127	30.5	126	31.0	123	31.4	114	28.8
	15.0	13.5	137	28.9	136	29.9	135	31.0	134	31.5	133	31.8	123	29.3	114	26.9
	-19.3	-20.0	61.0	18.1	60.8	19.3	60.6	20.4	60.5	21.0	60.4	21.6	60.2	22.7	60.0	23.9
	-15.0	-16.0	67.9	19.8	67.6	20.9	67.3	22.0	67.2	22.5	67.0	23.1	66.7	24.2	66.4	25.3
	-12.0	-13.0	73.6	20.9	73.2	22.0	72.9	23.1	72.7	23.6	72.5	24.1	72.1	25.2	71.7	26.3
	-9.0	-10.0	79.6	22.0	79.2	23.1	78.8	24.1	78.5	24.7	78.3	25.2	77.9	26.2	77.4	27.3
	-7.0	-8.0	83.9	22.7	83.4	23.8	82.9	24.8	82.6	25.3	82.4	25.9	81.9	26.9	81.4	27.9
	-5.0	-6.0	88.3	23.4	87.7	24.5	87.2	25.5	86.9	26.0	86.6	26.5	86.0	27.6	85.4	28.6
132	-3.0	-4.0	92.8	24.1	92.2	25.1	91.6	26.2	91.2	26.7	90.9	27.2	90.3	28.2	89.6	29.2
	-1.0	-2.0	97.4	24.8	96.7	25.8	96.1	26.8	95.7	27.3	95.4	27.8	94.7	28.9	94.0	29.9
(130%)	0.0	-1.0	99.8	25.1	99.1	26.1	98.4	27.2	98.0	27.7	97.6	28.2	96.9	29.2	96.2	30.2
	2.0	1.0	104	25.8	103	26.8	103	27.8	102	28.3	102	28.8	101	29.8	100	30.8
	5.0	4.0	111	26.8	111	27.8	110	28.8	109	29.3	109	29.8	108	30.8	106	31.2
	7.0	6.0	116	27.5	116	28.5	115	29.5	114	30.0	114	30.5	113	31.5	106	29.7
	9.0	7.8	121	28.1	120	29.1	119	30.1	118	30.6	118	31.1	114	31.0	106	28.5
	12.0	10.6	128	29.0	127	30.0	126	31.1	125	31.6	123	31.4	114	29.0	106	26.6
	15.0	13.5	136	30.0	135	31.1	132	31.6	128	30.4	123	29.3	114	27.1	106	24.9
	-19.3	-20.0	60.9	18.8	60.7	19.9	60.5	21.1	60.4	21.7	60.3	22.2	60.1	23.4	59.9	24.5
	-15.0	-16.0	67.7	20.5	67.4	21.6	67.1	22.7	67.0	23.2	66.9	23.8	66.6	24.9	66.3	26.0
	-12.0	-13.0	73.3	21.7	73.0	22.7	72.6	23.8	72.4	24.3	72.2	24.9	71.9	25.9	71.5	27.0
	-9.0	-10.0	79.3	22.8	78.9	23.9	78.4	24.9	78.2	25.4	78.0	26.0	77.5	27.0	77.1	28.0
	-7.0	-8.0	83.5	23.6	83.0	24.6	82.5	25.6	82.2	26.1	82.0	26.7	81.5	27.7	81.0	28.7
	-5.0	-6.0	87.8	24.3	87.3	25.3	86.7	26.3	86.4	26.8	86.1	27.4	85.6	28.4	85.0	29.4
122	-3.0	-4.0	92.3	25.0	91.6	26.0	91.0	27.0	90.7	27.5	90.4	28.1	89.7	29.1	89.1	30.1
	-1.0	-2.0	96.8	25.7	96.1	26.7	95.4	27.7	95.1	28.2	94.7	28.7	94.0	29.8	93.3	30.8
(120%)	0.0	-1.0	99.1	26.1	98.4	27.1	97.7	28.1	97.3	28.6	97.0	29.1	96.2	30.1	95.5	31.1
	2.0	1.0	103	26.8	103	27.8	102	28.8	101	29.3	101	29.8	100	30.8	97.9	30.8
	5.0	4.0	111	27.8	110	28.8	109	29.9	108	30.4	108	30.9	106	31.2	97.9	28.7
	7.0	6.0	115	28.6	114	29.6	114	30.6	113	31.1	113	31.6	106	29.7	97.9	27.3
	9.0	7.8	120	29.2	119	30.2	118	31.2	117	31.7	114	30.8	106	28.5	97.9	26.2
	12.0	10.6	127	30.3	126	31.3	122	31.0	118	29.9	114	28.8	106	26.6	97.9	24.5
	15.0	13.5	134	31.4	130	31.0	122	29.0	118	27.9	114	26.9	106	24.9	97.9	22.9
	-19.3	-20.0	60.8	19.6	60.6	20.7	60.4	21.9	60.3	22.4	60.2	23.0	60.0	24.2	59.8	25.3
	-15.0	-16.0	67.5	21.3	67.2	22.4	66.9	23.5	66.8	24.0	66.6	24.6	66.3	25.7	66.0	26.8
	-12.0	-13.0	73.0	22.5	72.7	23.6	72.3	24.7	72.1	25.2	71.9	25.7	71.6	26.8	71.2	27.9
	-9.0	-10.0	78.9	23.7	78.5	24.8	78.0	25.8	77.8	26.3	77.6	26.9	77.1	27.9	76.7	28.9
	-7.0	-8.0	83.0	24.5	82.5	25.5	82.0	26.6	81.8	27.1	81.5	27.6	81.0	28.6	80.5	29.6
	-5.0	-6.0	87.3	25.3	86.7	26.3	86.2	27.3	85.9	27.8	85.6	28.3	85.0	29.3	84.4	30.4
112	-3.0	-4.0	91.6	26.0	91.0	27.1	90.4	28.1	90.1	28.6	89.7	29.1	89.1	30.1	88.5	31.1
	-1.0	-2.0	96.1	26.8	95.4	27.8	94.7	28.8	94.4	29.3	94.0	29.8	93.3	30.8	89.8	30.3
(110%)	0.0	-1.0	98.3	27.2	97.6	28.2	96.9	29.2	96.5	29.7	96.2	30.2	95.4	31.2	89.8	29.6
	2.0	1.0	102	27.9	102	28.9	101	29.9	100	30.4	100	30.9	97.2	30.6	89.8	28.2
	5.0	4.0	109	29.1	109	30.1	108	31.1	107	31.6	104	30.8	97.2	28.5	89.8	26.2
	7.0	6.0	114	29.8	113	30.8	112	31.5	108	30.4	104	29.3	97.2	27.1	89.8	25.0
	9.0	7.8	119	30.6	118	31.5	112	30.2	108	29.1	104	28.1	97.2	26.0	89.8	23.9
	12.0	10.6	125	31.7	119	30.3	112	28.3	108	27.3	104	26.3	97.2	24.3	89.8	22.4
	15.0	13.5	127	30.2	119	28.3	112	26.4	108	25.5	104	24.5	97.2	22.7	89.8	21.0

TC : Total Capacity kW.

PI : Power Input kW (Compressor + Outdoor fan motor).

The data is based on the following conditions. Pipe length : 7.5 m; Height difference : 0 m.

MODEL SELECTION

■ MODELS : AJ*126L + AJ*A90U + AJ*A72U

• CAPACITY : 90.4kW (32HP)

Total rated heating capacity of indoor unit	Outdoor temperature		Indoor temperature													
			16°CDB		18°CDB		20°CDB		21°CDB		22°CDB		24°CDB		26°CDB	
	(°CDB)	(°CWB)	TC	PI	TC	PI	TC	PI	TC	PI	TC	PI	TC	PI	TC	PI
	-19.3	-20.0	60.6	20.5	60.4	21.6	60.2	22.8	60.1	23.4	60.0	23.9	59.8	25.1	59.6	26.2
	-15.0	-16.0	67.2	22.3	67.0	23.4	66.7	24.5	66.5	25.0	66.4	25.6	66.1	26.6	65.8	27.7
	-12.0	-13.0	72.7	23.6	72.3	24.6	72.0	25.7	71.8	26.2	71.6	26.7	71.2	27.8	70.8	28.9
	-9.0	-10.0	78.5	24.8	78.0	25.9	77.6	26.9	77.3	27.4	77.1	27.9	76.6	29.0	76.2	30.0
	-7.0	-8.0	82.5	25.7	82.0	26.7	81.5	27.7	81.2	28.2	81.0	28.7	80.4	29.7	79.9	30.7
	-5.0	-6.0	86.6	26.5	86.1	27.5	85.5	28.5	85.2	29.0	84.9	29.5	84.3	30.5	81.6	30.2
102	-3.0	-4.0	90.9	27.3	90.3	28.3	89.6	29.3	89.3	29.8	89.0	30.3	88.1	31.1	81.6	28.8
	-1.0	-2.0	95.2	28.1	94.5	29.1	93.8	30.1	93.5	30.5	93.1	31.0	88.4	29.8	81.6	27.5
(100%)	0.0	-1.0	97.4	28.5	96.7	29.5	96.0	30.5	95.6	30.9	95.1	31.3	88.4	29.1	81.6	26.8
	2.0	1.0	101	29.3	101	30.3	100	31.3	98.6	31.0	95.2	29.9	88.4	27.7	81.6	25.6
	5.0	4.0	108	30.5	107	31.5	102	29.9	98.6	28.9	95.2	27.8	88.4	25.8	81.6	23.8
	7.0	6.0	113	31.4	108	30.5	102	28.5	98.6	27.5	95.2	26.5	88.4	24.6	81.6	22.7
	9.0	7.8	115	31.2	108	29.2	102	27.3	98.6	26.4	95.2	25.4	88.4	23.6	81.6	21.7
	12.0	10.6	115	29.2	108	27.3	102	25.6	98.6	24.7	95.2	23.8	88.4	22.1	81.6	20.4
	15.0	13.5	115	27.2	108	25.5	102	23.9	98.6	23.1	95.2	22.2	88.4	20.6	81.6	19.1
	-19.3	-20.0	60.4	21.6	60.2	22.8	60.0	23.9	59.9	24.5	59.8	25.0	59.6	26.2	59.4	27.3
	-15.0	-16.0	66.9	23.5	66.6	24.6	66.3	25.6	66.2	26.2	66.0	26.7	65.7	27.8	65.4	28.9
	-12.0	-13.0	72.3	24.8	71.9	25.9	71.5	26.9	71.3	27.5	71.1	28.0	70.7	29.0	70.4	30.1
	-9.0	-10.0	77.9	26.1	77.4	27.2	77.0	28.2	76.8	28.7	76.5	29.2	76.1	30.2	73.4	29.9
	-7.0	-8.0	81.8	27.0	81.3	28.0	80.8	29.0	80.5	29.5	80.3	30.0	79.4	30.8	73.4	28.5
	-5.0	-6.0	85.8	27.9	85.3	28.9	84.7	29.9	84.4	30.4	84.1	30.9	79.6	29.5	73.4	27.2
91.8	-3.0	-4.0	90.0	28.7	89.3	29.7	88.7	30.7	88.3	31.2	85.7	30.3	79.6	28.1	73.4	25.9
	-1.0	-2.0	94.2	29.6	93.5	30.6	91.8	31.0	88.7	29.9	85.7	28.9	79.6	26.8	73.4	24.7
(90%)	0.0	-1.0	96.3	30.0	95.6	31.0	91.8	30.2	88.7	29.2	85.7	28.2	79.6	26.1	73.4	24.1
	2.0	1.0	100	30.9	97.9	30.8	91.8	28.8	88.7	27.8	85.7	26.9	79.6	24.9	73.4	23.0
	5.0	4.0	104	30.5	97.9	28.7	91.8	26.8	88.7	25.9	85.7	25.0	79.6	23.2	73.4	21.4
	7.0	6.0	104	29.1	97.9	27.3	91.8	25.6	88.7	24.7	85.7	23.8	79.6	22.1	73.4	20.4
	9.0	7.8	104	27.9	97.9	26.2	91.8	24.5	88.7	23.7	85.7	22.8	79.6	21.2	73.4	19.6
	12.0	10.6	104	26.1	97.9	24.5	91.8	22.9	88.7	22.2	85.7	21.4	79.6	19.9	73.4	18.4
	15.0	13.5	104	24.4	97.9	22.9	91.8	21.4	88.7	20.7	85.7	20.0	79.6	18.6	73.4	17.2
	-19.3	-20.0	60.2	23.0	60.0	24.2	59.8	25.3	59.7	25.9	59.6	26.4	59.3	27.5	59.1	28.7
	-15.0	-16.0	66.5	25.0	66.2	26.0	65.9	27.1	65.8	27.6	65.6	28.2	65.3	29.2	64.7	30.1
	-12.0	-13.0	71.7	26.4	71.3	27.4	71.0	28.4	70.8	29.0	70.6	29.5	70.1	30.4	65.3	28.5
	-9.0	-10.0	77.2	27.8	76.7	28.8	76.3	29.8	76.0	30.3	75.6	30.7	70.7	28.8	65.3	26.6
	-7.0	-8.0	81.0	28.7	80.5	29.7	79.9	30.7	78.9	30.6	76.2	29.6	70.7	27.5	65.3	25.4
	-5.0	-6.0	84.9	29.6	84.3	30.6	81.6	30.2	78.9	29.2	76.2	28.2	70.7	26.2	65.3	24.2
81.6	-3.0	-4.0	88.8	30.5	87.0	30.8	81.6	28.8	78.9	27.9	76.2	26.9	70.7	25.0	65.3	23.1
	-1.0	-2.0	92.5	31.2	87.0	29.3	81.6	27.5	78.9	26.5	76.2	25.6	70.7	23.8	65.3	22.0
(80%)	0.0	-1.0	92.5	30.5	87.0	28.6	81.6	26.8	78.9	25.9	76.2	25.0	70.7	23.2	65.3	21.5
	2.0	1.0	92.5	29.0	87.0	27.3	81.6	25.6	78.9	24.7	76.2	23.9	70.7	22.2	65.3	20.5
	5.0	4.0	92.5	27.0	87.0	25.4	81.6	23.8	78.9	23.0	76.2	22.2	70.7	20.6	65.3	19.1
	7.0	6.0	92.5	25.8	87.0	24.2	81.6	22.7	78.9	21.9	76.2	21.2	70.7	19.7	65.3	18.2
	9.0	7.8	92.5	24.7	87.0	23.2	81.6	21.7	78.9	21.0	76.2	20.3	70.7	18.9	65.3	17.5
	12.0	10.6	92.5	23.1	87.0	21.7	81.6	20.4	78.9	19.7	76.2	19.0	70.7	17.7	65.3	16.4
	15.0	13.5	92.5	21.6	87.0	20.3	81.6	19.1	78.9	18.4	76.2	17.8	70.7	16.6	65.3	15.4
	-19.3	-20.0	59.9	24.8	59.6	25.9	59.4	27.0	59.3	27.6	59.2	28.2	59.0	29.3	57.1	29.1
	-15.0	-16.0	66.0	26.8	65.7	27.9	65.4	28.9	65.2	29.5	65.1	30.0	61.9	28.9	57.1	26.8
	-12.0	-13.0	71.0	28.3	70.6	29.3	70.2	30.4	69.0	30.1	66.6	29.1	61.9	27.1	57.1	25.0
	-9.0	-10.0	76.3	29.8	75.6	30.7	71.4	29.1	69.0	28.1	66.6	27.1	61.9	25.2	57.1	23.4
	-7.0	-8.0	79.9	30.8	76.2	29.6	71.4	27.7	69.0	26.8	66.6	25.9	61.9	24.1	57.1	22.3
	-5.0	-6.0	80.9	30.0	76.2	28.2	71.4	26.4	69.0	25.6	66.6	24.7	61.9	23.0	57.1	21.3
71.4	-3.0	-4.0	80.9	28.6	76.2	26.9	71.4	25.2	69.0	24.4	66.6	23.6	61.9	21.9	57.1	20.3
	-1.0	-2.0	80.9	27.2	76.2	25.6	71.4	24.0	69.0	23.2	66.6	22.5	61.9	20.9	57.1	19.3
(70%)	0.0	-1.0	80.9	26.6	76.2	25.0	71.4	23.5	69.0	22.7	66.6	21.9	61.9	20.4	57.1	18.9
	2.0	1.0	80.9	25.3	76.2	23.9	71.4	22.4	69.0	21.6	66.6	20.9	61.9	19.5	57.1	18.0
	5.0	4.0	80.9	23.6	76.2	22.2	71.4	20.8	69.0	20.2	66.6	19.5	61.9	18.1	57.1	16.8
	7.0	6.0	80.9	22.5	76.2	21.2	71.4	19.9	69.0	19.2	66.6	18.6	61.9	17.3	57.1	16.1
	9.0	7.8	80.9	21.6	76.2	20.3	71.4	19.1	69.0	18.4	66.6	17.8	61.9	16.6	57.1	15.4
	12.0	10.6	80.9	20.2	76.2	19.0	71.4	17.9	69.0	17.3	66.6	16.7	61.9	15.6	57.1	14.5
	15.0	13.5	80.9	18.9	76.2	17.8	71.4	16.7	69.0	16.2	66.6	15.7	61.9	14.6	57.1	13.6
	-19.3	-20.0	59.4	27.1	59.2	28.2	59.0	29.3	58.5	29.6	57.1	29.1	53.0	27.1	49.0	25.1
	-15.0	-16.0	65.3	29.2	64.7	30.1	61.2	28.6	59.2	27.7	57.1	26.8	53.0	24.9	49.0	23.1
	-12.0	-13.0	69.3	30.3	65.3	28.5	61.2	26.8	59.2	25.9	57.1	25.0	53.0	23.3	49.0	21.6
	-9.0	-10.0	69.4	28.2	65.3	26.6	61.2	25.0	59.2	24.2	57.1	23.4	53.0	21.8	49.0	20.2
	-7.0	-8.0	69.4	26.9	65.3	25.4	61.2	23.8	59.2	23.1	57.1	22.3	53.0	20.8	49.0	19.2
	-5.0	-6.0	69.4	25.7	65.3	24.2	61.2	22.7	59.2	22.0	57.1	21.3	53.0	19.8	49.0	18.4
61.2	-3.0	-4.0	69.4	24.5	65.3	23.1	61.2	21.7	59.2	21.0	57.1	20.3	53.0	18.9	49.0	17.5
	-1.0	-2.0	69.4	23.4	65.3	22.0	61.2	20.7	59.2	20.0	57.1	19.3	53.0	18.0	49.0	16.7
(60%)	0.0	-1.0	69.4	22.8	65.3	21.5	61.2	20.2	59.2	19.5	57.1	18.9	53.0	17.6	49.0	16.4
	2.0	1.0	69.4	21.7	65.3	20.5	61.2	19.3	59.2	18.6	57.1	18.0	53.0	16.8	49.0	15.6
	5.0	4.0	69.4	20.3	65.3	19.1	61.2	18.0	59.2	17.4	57.1	16.8	53.0	15.7	49.0	14.6
	7.0	6.0	69.4	19.3	65.3	18.2	61.2	17.1	59.2	16.6	57.1	16.1	53.0	15.0	49.0	13.9
	9.0	7.8	69.4	18.5	65.3	17.5	61.2	16.4	59.2	15.9	57.1	15.4	53.0	14.4	49.0	13.4
	12.0	10.6	69.4	17.4	65.3	16.4	61.2	15.4	59.2	15.0	57.1	14.5	53.0	13.5	49.0	12.6
	15.0	13.5	69.4	16.3	65.3	15.4	61.2	14.5	59.2	14.0	57.1	13.6	53.0	12.7	49.0	11.8
	-19.3	-20.0	57.8	29.4	54.4	27.8	51.0	26.1	49.3	25.3	47.6	24.4	44.2	22.8	40.8	21.2
	-15.0	-16.0	57.8	27.1	54.4	25.5	51.0	24.0	49.3	23.2	47.6	22.5	44.2	21.0	40.8	19.5
	-12.0	-13.0	57.8	25.3	54.4	23.9	51.0	22.4	49.3	21.7	47.6	21.0	44.2	19.6	40.8	18.2
	-9.0	-10.0	57.8	23.6	54.4	22.3	51.0	21.0	49.3	20.3	47.6	19.6	44.2	18.3	40.8	17.0
	-7.0	-8.0	57.8	22.5	54.4	21.3	51.0	20.0	49.3	19.4	47.6	18.7	44.2	17.5	40.8	16.3
	-5.0	-6.0	57.8	21.5	54.4	20.3	51.0	19.1	49.3	18.5	47.6	17.9	44.2	16.7	40.8	15.5
51.0	-3.0	-4.0	57.8	20.5	54.4	19.4	51.0	18.2	49.3	17.6	47.6	17.1	44.2	16.0	40.8	14.8
	-1.0	-2.0	57.8	19.6	54.4	18.5	51.0	17.4	49.3	16.8	47.6	16.3	44.2	15.2	40.8	14.2
(50%)	0.0	-1.0	57.8	19.1	54.4	18.0	51.0	17.0	49.3	16.5	47.6	15.9	44.2	14.9	40.8	13.9
	2.0	1.0	57.8	18.2	54.4	17.2	51.0	16.2	49.3	15.7	47.6	15.2	44.2	14.2	40.8	13.2
	5.0	4.0	57.8	17.0	54.4	16.1	51.0	15.1	49.3	14.7	47.6	14.2	44.2	13.3	40.8	12.4
	7.0	6.0	57.8	16.2	54.4	15.3	51.0	14.5	49.3	14.0	47.6	13.6	44.2	12.7	40.8	11.9
	9.0	7.8	57.8	15.6	54.4	14.7	51.0	13.9	49.3	13.5	47.6	13.1	44.2	12.2	40.8	11.4
	12.0	10.6	57.8	14.6	54.4	13.8	51.0	13.1	49.3	12.7	47.6	12.3	44.2	11.5	40.8	10.8
	15.0	13.5	57.8	13.7	54.4	13.0	51.0	12.3	49.3	11.9	47.6	11.6	44.2	10.8	40.8	10.1

TC : Total Capacity kW.

PI : Power Input kW (Compressor + Outdoor fan motor).

The data is based on the following conditions. Pipe length : 7.5 m; Height difference : 0 m.

■ MODELS : AJ*126L + AJ*A90U + AJ*A90U

• CAPACITY : 96.0kW (34HP)

Total rated heating capacity of indoor unit	Outdoor temperature		Indoor temperature													
			16°CDB		18°CDB		20°CDB		21°CDB		22°CDB		24°CDB		26°CDB	
	(°CDB)	(°CWB)	TC	PI	TC	PI	TC	PI	TC	PI	TC	PI	TC	PI	TC	PI
	-19.3	-20.0	64.8	18.0	64.6	19.3	64.4	20.5	64.3	21.1	64.2	21.8	64.0	23.0	63.8	24.2
	-15.0	-16.0	72.2	19.7	71.9	20.9	71.6	22.1	71.5	22.7	71.3	23.3	71.0	24.5	70.7	25.6
	-12.0	-13.0	78.3	20.9	77.9	22.0	77.6	23.2	77.4	23.8	77.2	24.3	76.8	25.5	76.4	26.6
	-9.0	-10.0	84.9	22.0	84.4	23.1	84.0	24.2	83.7	24.8	83.5	25.4	83.0	26.5	82.5	27.6
	-7.0	-8.0	89.5	22.7	88.9	23.8	88.4	24.9	88.2	25.5	87.9	26.0	87.4	27.2	86.8	28.3
	-5.0	-6.0	94.2	23.4	93.6	24.5	93.1	25.6	92.8	26.1	92.5	26.7	91.9	27.8	91.3	28.9
162	-3.0	-4.0	99.1	24.0	98.5	25.1	97.8	26.2	97.5	26.8	97.2	27.3	96.5	28.4	95.9	29.5
	-1.0	-2.0	104	24.7	103	25.8	102	26.9	102	27.4	102	28.0	101	29.1	100	30.2
(150%)	0.0	-1.0	106	25.0	106	26.1	105	27.2	104	27.7	104	28.3	103	29.4	102	30.5
	2.0	1.0	111	25.6	111	26.7	110	27.8	109	28.4	109	28.9	108	30.0	107	31.1
	5.0	4.0	120	26.6	119	27.7	118	28.8	117	29.3	117	29.9	116	30.9	115	32.0
	7.0	6.0	125	27.2	124	28.3	123	29.4	123	29.9	122	30.5	121	31.6	120	32.7
	9.0	7.8	130	27.8	129	28.9	128	30.0	127	30.5	127	31.1	126	32.2	125	33.3
	12.0	10.6	138	28.6	137	29.8	136	30.9	135	31.4	135	32.0	133	33.1	129	32.9
	15.0	13.5	146	29.6	145	30.7	144	31.8	143	32.4	143	33.0	140	33.5	129	30.7
	-19.3	-20.0	64.7	18.6	64.5	19.8	64.3	21.0	64.2	21.7	64.1	22.3	63.9	23.5	63.7	24.7
	-15.0	-16.0	72.0	20.3	71.8	21.5	71.5	22.6	71.3	23.2	71.2	23.8	70.9	25.0	70.5	26.2
	-12.0	-13.0	78.1	21.5	77.7	22.6	77.4	23.8	77.2	24.4	77.0	24.9	76.6	26.1	76.2	27.2
	-9.0	-10.0	84.6	22.6	84.2	23.7	83.7	24.9	83.5	25.4	83.2	26.0	82.8	27.1	82.3	28.2
	-7.0	-8.0	89.2	23.4	88.6	24.5	88.1	25.6	87.9	26.1	87.6	26.7	87.1	27.8	86.5	28.9
	-5.0	-6.0	93.9	24.1	93.3	25.2	92.7	26.3	92.4	26.8	92.1	27.4	91.5	28.5	90.9	29.6
151	-3.0	-4.0	98.7	24.8	98.1	25.9	97.4	27.0	97.1	27.5	96.8	28.0	96.1	29.1	95.4	30.2
	-1.0	-2.0	103	25.4	102	26.5	102	27.6	101	28.2	101	28.7	100	29.8	100	30.9
(140%)	0.0	-1.0	106	25.8	105	26.9	104	28.0	104	28.5	103	29.0	103	30.1	102	31.2
	2.0	1.0	111	26.5	110	27.5	109	28.6	109	29.2	108	29.7	108	30.8	107	31.9
	5.0	4.0	119	27.4	118	28.5	117	29.6	117	30.2	116	30.7	115	31.8	114	32.9
	7.0	6.0	124	28.1	123	29.2	122	30.3	122	30.8	121	31.4	120	32.5	119	33.6
	9.0	7.8	129	28.7	128	29.8	127	30.9	127	31.4	126	32.0	125	33.1	120	32.7
	12.0	10.6	137	29.7	136	30.8	135	31.9	134	32.4	133	33.0	131	33.3	120	30.6
	15.0	13.5	145	30.7	144	31.8	143	32.9	142	33.5	141	33.7	131	31.1	120	28.5
	-19.3	-20.0	64.6	19.2	64.4	20.4	64.2	21.7	64.1	22.3	64.0	22.9	63.8	24.1	63.6	25.3
	-15.0	-16.0	71.9	20.9	71.6	22.1	71.3	23.3	71.1	23.9	71.0	24.5	70.7	25.6	70.4	26.8
	-12.0	-13.0	77.9	22.2	77.5	23.3	77.1	24.5	77.0	25.0	76.8	25.6	76.4	26.8	76.0	27.9
	-9.0	-10.0	84.3	23.3	83.9	24.5	83.4	25.6	83.2	26.2	82.9	26.7	82.4	27.8	82.0	28.9
	-7.0	-8.0	88.8	24.1	88.3	25.2	87.8	26.3	87.5	26.9	87.2	27.4	86.7	28.5	86.2	29.6
	-5.0	-6.0	93.5	24.9	92.9	26.0	92.3	27.0	92.0	27.6	91.7	28.1	91.1	29.2	90.5	30.3
140	-3.0	-4.0	98.2	25.6	97.6	26.7	96.9	27.8	96.6	28.3	96.3	28.8	95.6	29.9	94.9	31.0
	-1.0	-2.0	103	26.3	102	27.4	101	28.5	101	29.0	100	29.5	100	30.6	99.5	31.7
(130%)	0.0	-1.0	105	26.7	104	27.7	104	28.8	103	29.4	103	29.9	102	31.0	101	32.1
	2.0	1.0	110	27.4	109	28.4	109	29.5	108	30.1	108	30.6	107	31.7	106	32.8
	5.0	4.0	118	28.4	117	29.5	116	30.6	116	31.1	115	31.7	114	32.7	112	33.1
	7.0	6.0	123	29.1	122	30.2	121	31.3	121	31.8	120	32.4	119	33.5	112	31.5
	9.0	7.8	128	29.8	127	30.9	126	31.9	125	32.5	125	33.0	121	32.9	112	30.2
	12.0	10.6	136	30.8	135	31.9	133	33.0	133	33.5	131	33.3	121	30.8	112	28.3
	15.0	13.5	144	31.9	143	33.0	140	33.5	135	32.3	131	31.1	121	28.7	112	26.4
	-19.3	-20.0	64.5	19.9	64.3	21.1	64.1	22.4	64.0	23.0	63.9	23.6	63.7	24.8	63.4	26.0
	-15.0	-16.0	71.7	21.7	71.4	22.9	71.1	24.0	71.0	24.6	70.8	25.2	70.5	26.4	70.2	27.5
	-12.0	-13.0	77.6	23.0	77.3	24.1	76.9	25.2	76.7	25.8	76.5	26.4	76.1	27.5	75.7	28.7
	-9.0	-10.0	84.0	24.2	83.5	25.3	83.1	26.4	82.8	27.0	82.6	27.5	82.1	28.6	81.6	29.8
	-7.0	-8.0	88.4	25.0	87.9	26.1	87.4	27.2	87.1	27.7	86.8	28.3	86.3	29.4	85.7	30.5
	-5.0	-6.0	93.0	25.8	92.4	26.9	91.8	27.9	91.5	28.5	91.2	29.0	90.6	30.1	90.0	31.2
129	-3.0	-4.0	97.7	26.5	97.0	27.6	96.4	28.7	96.0	29.2	95.7	29.8	95.0	30.9	94.4	31.9
	-1.0	-2.0	102	27.3	101	28.4	101	29.4	100	30.0	100	30.5	99.6	31.6	98.8	32.7
(120%)	0.0	-1.0	104	27.7	104	28.7	103	29.8	103	30.3	102	30.9	101	32.0	101	33.0
	2.0	1.0	109	28.4	109	29.5	108	30.6	107	31.1	107	31.6	106	32.7	103	32.7
	5.0	4.0	117	29.6	116	30.6	115	31.7	115	32.2	114	32.8	112	33.1	103	30.4
	7.0	6.0	122	30.3	121	31.4	120	32.5	120	33.0	119	33.5	112	31.5	103	29.0
	9.0	7.8	127	31.0	126	32.1	125	33.2	124	33.7	120	32.7	112	30.2	103	27.8
	12.0	10.6	134	32.1	133	33.2	129	32.9	125	31.7	120	30.6	112	28.3	103	26.0
	15.0	13.5	142	33.3	138	33.0	129	30.7	125	29.6	120	28.5	112	26.4	103	24.3
	-19.3	-20.0	64.4	20.7	64.2	22.0	64.0	23.2	63.9	23.8	63.7	24.4	63.5	25.6	63.3	26.8
	-15.0	-16.0	71.5	22.6	71.2	23.7	70.9	24.9	70.7	25.5	70.6	26.1	70.3	27.2	69.9	28.4
	-12.0	-13.0	77.3	23.9	77.0	25.0	76.6	26.2	76.4	26.7	76.2	27.3	75.8	28.4	75.4	29.6
	-9.0	-10.0	83.6	25.2	83.1	26.3	82.6	27.4	82.4	27.9	82.2	28.5	81.7	29.6	81.2	30.7
	-7.0	-8.0	87.9	26.0	87.4	27.1	86.9	28.2	86.6	28.7	86.3	29.3	85.8	30.4	85.2	31.5
	-5.0	-6.0	92.4	26.8	91.8	27.9	91.2	29.0	90.9	29.5	90.6	30.1	90.0	31.2	89.4	32.2
118	-3.0	-4.0	97.0	27.6	96.4	28.7	95.7	29.8	95.4	30.3	95.0	30.9	94.4	31.9	93.7	33.0
	-1.0	-2.0	101	28.4	101	29.5	100	30.6	99.9	31.1	99.6	31.6	98.8	32.7	95.0	32.1
(110%)	0.0	-1.0	104	28.8	103	29.9	102	31.0	102	31.5	101	32.0	101	33.1	95.0	31.4
	2.0	1.0	108	29.6	108	30.7	107	31.8	106	32.3	106	32.8	102	32.5	95.0	29.9
	5.0	4.0	116	30.9	115	31.9	114	33.0	114	33.5	110	32.7	102	30.2	95.0	27.8
	7.0	6.0	121	31.7	120	32.7	118	33.5	114	32.3	110	31.1	102	28.8	95.0	26.5
	9.0	7.8	126	32.4	124	33.5	118	32.1	114	30.9	110	29.8	102	27.6	95.0	25.4
	12.0	10.6	133	33.6	126	32.1	118	30.0	114	28.9	110	27.9	102	25.8	95.0	23.8
	15.0	13.5	134	32.0	126	30.0	118	28.0	114	27.0	110	26.0	102	24.1	95.0	22.2

TC : Total Capacity kW.

PI : Power Input kW (Compressor + Outdoor fan motor).

The data is based on the following conditions. Pipe length : 7.5 m; Height difference : 0 m.

MODEL SELECTION

■ MODELS : AJ*126L + AJ*A90U + AJ*A90U

• CAPACITY : 96.0kW (34HP)

Total rated heating capacity of indoor unit	Outdoor temperature		Indoor temperature													
			16°CDB		18°CDB		20°CDB		21°CDB		22°CDB		24°CDB		26°CDB	
	(°CDB)	(°CWB)	TC	PI	TC	PI	TC	PI	TC	PI	TC	PI	TC	PI	TC	PI
	-19.3	-20.0	64.2	21.7	64.0	22.9	63.8	24.2	63.7	24.8	63.6	25.4	63.3	26.6	63.1	27.8
	-15.0	-16.0	71.2	23.6	70.9	24.8	70.6	26.0	70.4	26.5	70.3	27.1	70.0	28.3	69.6	29.4
	-12.0	-13.0	77.0	25.0	76.6	26.1	76.2	27.3	76.0	27.8	75.8	28.4	75.4	29.5	75.0	30.6
	-9.0	-10.0	83.1	26.3	82.6	27.4	82.1	28.5	81.9	29.1	81.7	29.6	81.2	30.7	80.7	31.8
	-7.0	-8.0	87.3	27.2	86.8	28.3	86.3	29.4	86.0	29.9	85.7	30.5	85.2	31.6	84.6	32.6
	-5.0	-6.0	91.7	28.1	91.1	29.2	90.5	30.2	90.2	30.8	89.9	31.3	89.3	32.4	86.4	32.1
108	-3.0	-4.0	96.2	28.9	95.6	30.0	94.9	31.1	94.6	31.6	94.2	32.1	93.4	33.1	86.4	30.6
	-1.0	-2.0	100	29.8	100	30.9	99.4	31.9	99.0	32.4	98.6	33.0	93.6	31.6	86.4	29.2
(100%)	0.0	-1.0	103	30.2	102	31.3	101	32.3	101	32.9	100	33.3	93.6	30.9	86.4	28.5
	2.0	1.0	107	31.1	107	32.1	106	33.2	104	33.0	100	31.8	93.6	29.4	86.4	27.1
	5.0	4.0	115	32.4	114	33.4	108	31.8	104	30.6	100	29.5	93.6	27.4	86.4	25.2
	7.0	6.0	119	33.3	115	32.4	108	30.3	104	29.2	100	28.2	93.6	26.1	86.4	24.1
	9.0	7.8	122	33.1	115	31.0	108	29.0	104	28.0	100	27.0	93.6	25.0	86.4	23.0
	12.0	10.6	122	31.0	115	29.0	108	27.1	104	26.2	100	25.2	93.6	23.4	86.4	21.6
	15.0	13.5	122	28.9	115	27.1	108	25.3	104	24.5	100	23.6	93.6	21.9	86.4	20.2
	-19.3	-20.0	64.0	22.9	63.8	24.1	63.6	25.4	63.5	26.0	63.4	26.6	63.1	27.8	62.9	29.0
	-15.0	-16.0	70.9	24.9	70.6	26.1	70.3	27.2	70.1	27.8	69.9	28.4	69.6	29.5	69.3	30.7
	-12.0	-13.0	76.5	26.3	76.1	27.5	75.7	28.6	75.5	29.1	75.3	29.7	74.9	30.8	74.5	31.9
	-9.0	-10.0	82.5	27.7	82.0	28.8	81.5	29.9	81.3	30.5	81.1	31.0	80.6	32.1	77.8	31.7
	-7.0	-8.0	86.6	28.7	86.1	29.7	85.6	30.8	85.3	31.4	85.0	31.9	84.1	32.7	77.8	30.3
	-5.0	-6.0	90.9	29.6	90.3	30.6	89.7	31.7	89.4	32.2	89.1	32.8	84.2	31.3	77.8	28.9
97.2	-3.0	-4.0	95.3	30.5	94.6	31.6	93.9	32.6	93.5	33.1	90.7	32.2	84.2	29.8	77.8	27.5
	-1.0	-2.0	99.7	31.4	99.0	32.5	97.2	32.9	94.0	31.8	90.7	30.6	84.2	28.4	77.8	26.2
(90%)	0.0	-1.0	101	31.9	101	32.9	97.2	32.1	94.0	31.0	90.7	29.9	84.2	27.7	77.8	25.6
	2.0	1.0	106	32.8	103	32.7	97.2	30.6	94.0	29.5	90.7	28.5	84.2	26.4	77.8	24.4
	5.0	4.0	110	32.4	103	30.4	97.2	28.5	94.0	27.5	90.7	26.5	84.2	24.6	77.8	22.7
	7.0	6.0	110	30.9	103	29.0	97.2	27.1	94.0	26.2	90.7	25.3	84.2	23.4	77.8	21.7
	9.0	7.8	110	29.6	103	27.8	97.2	26.0	94.0	25.1	90.7	24.2	84.2	22.5	77.8	20.8
	12.0	10.6	110	27.7	103	26.0	97.2	24.3	94.0	23.5	90.7	22.7	84.2	21.0	77.8	19.4
	15.0	13.5	110	25.9	103	24.3	97.2	22.7	94.0	22.0	90.7	21.2	84.2	19.7	77.8	18.2
	-19.3	-20.0	63.7	24.4	63.5	25.6	63.3	26.8	63.2	27.4	63.1	28.0	62.8	29.2	62.6	30.4
	-15.0	-16.0	70.5	26.5	70.2	27.6	69.8	28.8	69.7	29.3	69.5	29.9	69.2	31.0	68.6	32.0
	-12.0	-13.0	75.9	28.0	75.6	29.1	75.2	30.2	75.0	30.7	74.7	31.3	74.2	32.3	69.1	30.2
	-9.0	-10.0	81.7	29.5	81.3	30.5	80.8	31.6	80.5	32.2	80.1	32.6	74.9	30.6	69.1	28.2
	-7.0	-8.0	85.8	30.4	85.2	31.5	84.7	32.6	83.5	32.5	80.6	31.4	74.9	29.1	69.1	26.9
	-5.0	-6.0	89.9	31.4	89.3	32.5	86.4	32.1	83.5	31.0	80.6	29.9	74.9	27.8	69.1	25.7
86.4	-3.0	-4.0	94.1	32.4	92.2	32.7	86.4	30.6	83.5	29.6	80.6	28.5	74.9	26.5	69.1	24.5
	-1.0	-2.0	97.9	33.2	92.2	31.1	86.4	29.2	83.5	28.2	80.6	27.2	74.9	25.2	69.1	23.3
(80%)	0.0	-1.0	97.9	32.4	92.2	30.4	86.4	28.5	83.5	27.5	80.6	26.5	74.9	24.6	69.1	22.8
	2.0	1.0	97.9	30.8	92.2	29.0	86.4	27.1	83.5	26.2	80.6	25.3	74.9	23.5	69.1	21.7
	5.0	4.0	97.9	28.7	92.2	26.9	86.4	25.2	83.5	24.4	80.6	23.5	74.9	21.9	69.1	20.2
	7.0	6.0	97.9	27.3	92.2	25.7	86.4	24.1	83.5	23.2	80.6	22.4	74.9	20.9	69.1	19.3
	9.0	7.8	97.9	26.2	92.2	24.6	86.4	23.0	83.5	22.3	80.6	21.5	74.9	20.0	69.1	18.5
	12.0	10.6	97.9	24.5	92.2	23.0	86.4	21.6	83.5	20.9	80.6	20.2	74.9	18.7	69.1	17.4
	15.0	13.5	97.9	22.9	92.2	21.5	86.4	20.2	83.5	19.5	80.6	18.9	74.9	17.5	69.1	16.3
	-19.3	-20.0	63.4	26.3	63.2	27.5	62.9	28.7	62.8	29.3	62.7	29.9	62.5	31.1	60.5	30.9
	-15.0	-16.0	69.9	28.5	69.6	29.6	69.3	30.7	69.1	31.3	68.9	31.9	65.5	30.7	60.5	28.4
	-12.0	-13.0	75.2	30.0	74.8	31.1	74.4	32.2	73.1	32.0	70.6	30.9	65.5	28.7	60.5	26.5
	-9.0	-10.0	80.8	31.6	80.1	32.6	75.6	30.8	73.1	29.8	70.6	28.8	65.5	26.8	60.5	24.8
	-7.0	-8.0	84.6	32.7	80.6	31.4	75.6	29.4	73.1	28.4	70.6	27.5	65.5	25.5	60.5	23.6
	-5.0	-6.0	85.7	31.8	80.6	29.9	75.6	28.1	73.1	27.1	70.6	26.2	65.5	24.4	60.5	22.5
75.6	-3.0	-4.0	85.7	30.3	80.6	28.5	75.6	26.7	73.1	25.9	70.6	25.0	65.5	23.2	60.5	21.5
	-1.0	-2.0	85.7	28.9	80.6	27.2	75.6	25.5	73.1	24.6	70.6	23.8	65.5	22.1	60.5	20.5
(70%)	0.0	-1.0	85.7	28.2	80.6	26.5	75.6	24.9	73.1	24.1	70.6	23.2	65.5	21.6	60.5	20.0
	2.0	1.0	85.7	26.9	80.6	25.3	75.6	23.7	73.1	22.9	70.6	22.2	65.5	20.6	60.5	19.1
	5.0	4.0	85.7	25.0	80.6	23.5	75.6	22.1	73.1	21.4	70.6	20.6	65.5	19.2	60.5	17.8
	7.0	6.0	85.7	23.9	80.6	22.4	75.6	21.1	73.1	20.4	70.6	19.7	65.5	18.3	60.5	17.0
	9.0	7.8	85.7	22.9	80.6	21.5	75.6	20.2	73.1	19.5	70.6	18.9	65.5	17.6	60.5	16.3
	12.0	10.6	85.7	21.4	80.6	20.2	75.6	18.9	73.1	18.3	70.6	17.7	65.5	16.5	60.5	15.3
	15.0	13.5	85.7	20.0	80.6	18.9	75.6	17.7	73.1	17.1	70.6	16.6	65.5	15.5	60.5	14.4
	-19.3	-20.0	62.9	28.8	62.7	30.0	62.5	31.2	62.0	31.5	60.5	30.9	56.2	28.7	51.8	26.6
	-15.0	-16.0	69.2	31.0	68.6	31.9	64.8	30.4	62.6	29.4	60.5	28.4	56.2	26.4	51.8	24.5
	-12.0	-13.0	73.4	32.1	69.1	30.2	64.8	28.4	62.6	27.5	60.5	26.5	56.2	24.7	51.8	22.9
	-9.0	-10.0	73.4	30.0	69.1	28.2	64.8	26.5	62.6	25.6	60.5	24.8	56.2	23.0	51.8	21.4
	-7.0	-8.0	73.4	28.6	69.1	26.9	64.8	25.3	62.6	24.4	60.5	23.6	56.2	22.0	51.8	20.4
	-5.0	-6.0	73.4	27.3	69.1	25.7	64.8	24.1	62.6	23.3	60.5	22.5	56.2	21.0	51.8	19.4
64.8	-3.0	-4.0	73.4	26.0	69.1	24.5	64.8	23.0	62.6	22.2	60.5	21.5	56.2	20.0	51.8	18.6
	-1.0	-2.0	73.4	24.8	69.1	23.3	64.8	21.9	62.6	21.2	60.5	20.5	56.2	19.1	51.8	17.7
(60%)	0.0	-1.0	73.4	24.2	69.1	22.8	64.8	21.4	62.6	20.7	60.5	20.0	56.2	18.6	51.8	17.3
	2.0	1.0	73.4	23.0	69.1	21.7	64.8	20.4	62.6	19.7	60.5	19.1	56.2	17.8	51.8	16.5
	5.0	4.0	73.4	21.5	69.1	20.2	64.8	19.0	62.6	18.4	60.5	17.8	56.2	16.6	51.8	15.4
	7.0	6.0	73.4	20.5	69.1	19.3	64.8	18.1	62.6	17.6	60.5	17.0	56.2	15.9	51.8	14.7
	9.0	7.8	73.4	19.6	69.1	18.5	64.8	17.4	62.6	16.8	60.5	16.3	56.2	15.2	51.8	14.1
	12.0	10.6	73.4	18.4	69.1	17.4	64.8	16.3	62.6	15.8	60.5	15.3	56.2	14.3	51.8	13.3
	15.0	13.5	73.4	17.2	69.1	16.3	64.8	15.3	62.6	14.8	60.5	14.4	56.2	13.4	51.8	12.5
	-19.3	-20.0	61.2	31.2	57.6	29.5	54.0	27.7	52.2	26.8	50.4	25.9	46.8	24.2	43.2	22.4
	-15.0	-16.0	61.2	28.7	57.6	27.1	54.0	25.4	52.2	24.6	50.4	23.8	46.8	22.2	43.2	20.6
	-12.0	-13.0	61.2	26.8	57.6	25.3	54.0	23.8	52.2	23.0	50.4	22.3	46.8	20.8	43.2	19.3
	-9.0	-10.0	61.2	25.0	57.6	23.6	54.0	22.2	52.2	21.5	50.4	20.8	46.8	19.4	43.2	18.0
	-7.0	-8.0	61.2	23.9	57.6	22.5	54.0	21.2	52.2	20.5	50.4	19.8	46.8	18.5	43.2	17.2
	-5.0	-6.0	61.2	22.8	57.6	21.5	54.0	20.2	52.2	19.6	50.4	18.9	46.8	17.7	43.2	16.4
54.0	-3.0	-4.0	61.2	21.7	57.6	20.5	54.0	19.3	52.2	18.7	50.4	18.1	46.8	16.9	43.2	15.7
	-1.0	-2.0	61.2	20.7	57.6	19.6	54.0	18.4	52.2	17.8	50.4	17.2	46.8	16.1	43.2	15.0
(50%)	0.0	-1.0	61.2	20.2	57.6	19.1	54.0	18.0	52.2	17.4	50.4	16.8	46.8	15.7	43.2	14.6
	2.0	1.0	61.2	19.3	57.6	18.2	54.0	17.1	52.2	16.6	50.4	16.1	46.8	15.0	43.2	14.0
	5.0	4.0	61.2	18.0	57.6	17.0	54.0	16.0	52.2	15.5	50.4	15.0	46.8	14.0	43.2	13.1
	7.0	6.0	61.2	17.2	57.6	16.2	54.0	15.3	52.2	14.8	50.4	14.4	46.8	13.4	43.2	12.5
	9.0	7.8	61.2	16.5	57.6	15.6	54.0	14.7	52.2	14.2	50.4	13.8	46.8	12.9	43.2	12.0
	12.0	10.6	61.2	15.5	57.6	14.6	54.0	13.8	52.2	13.4	50.4	13.0	46.8	12.1	43.2	11.3
	15.0	13.5	61.2	14.5	57.6	13.7	54.0	12.9	52.2	12.6	50.4	12.2	46.8	11.4	43.2	10.7

TC : Total Capacity kW.

PI : Power Input kW (Compressor + Outdoor fan motor).

The data is based on the following conditions. Pipe length : 7.5 m; Height difference : 0 m.

MODEL SELECTION

HEATING CAPACITY

■ MODELS : AJ*126L + AJ*126U + AJ*A72U

• CAPACITY : 102kW (36HP)

Total rated heating capacity of indoor unit	Outdoor temperature		Indoor temperature													
			16°CDB		18°CDB		20°CDB		21°CDB		22°CDB		24°CDB		26°CDB	
	(°CDB)	(°CWB)	TC	PI	TC	PI	TC	PI	TC	PI	TC	PI	TC	PI	TC	PI
	-19.3	-20.0	69.0	19.8	68.8	21.1	68.7	22.5	68.6	23.2	68.5	23.9	68.3	25.3	68.2	26.6
	-15.0	-16.0	76.8	21.6	76.6	22.9	76.3	24.2	76.2	24.9	76.0	25.6	75.8	26.9	75.5	28.2
	-12.0	-13.0	83.3	22.9	83.0	24.2	82.6	25.5	82.5	26.1	82.3	26.7	81.9	28.0	81.6	29.3
	-9.0	-10.0	90.3	24.1	89.8	25.4	89.4	26.6	89.2	27.2	89.0	27.9	88.5	29.1	88.1	30.4
	-7.0	-8.0	95.1	24.9	94.6	26.1	94.1	27.4	93.9	28.0	93.6	28.6	93.1	29.8	92.6	31.1
	-5.0	-6.0	100	25.6	99.6	26.9	99.1	28.1	98.8	28.7	98.5	29.3	97.9	30.5	97.3	31.8
172	-3.0	-4.0	105	26.4	104	27.6	104	28.8	103	29.4	103	30.0	102	31.2	102	32.5
	-1.0	-2.0	110	27.1	110	28.3	109	29.5	108	30.1	108	30.7	107	31.9	107	33.1
(150%)	0.0	-1.0	113	27.4	112	28.6	111	29.9	111	30.5	111	31.1	110	32.3	109	33.5
	2.0	1.0	118	28.1	118	29.3	117	30.5	116	31.1	116	31.8	115	33.0	114	34.2
	5.0	4.0	127	29.2	126	30.4	125	31.6	125	32.2	124	32.8	123	34.0	122	35.2
	7.0	6.0	133	29.8	132	31.0	131	32.3	130	32.9	130	33.5	129	34.7	128	35.9
	9.0	7.8	138	30.5	137	31.7	136	32.9	135	33.5	135	34.1	134	35.3	133	36.5
	12.0	10.6	147	31.4	145	32.6	144	33.9	144	34.5	143	35.1	142	36.3	138	36.2
	15.0	13.5	155	32.4	154	33.7	153	34.9	152	35.6	152	36.2	149	36.9	138	33.8
	-19.3	-20.0	68.9	20.4	68.7	21.7	68.6	23.1	68.5	23.8	68.4	24.5	68.3	25.8	68.1	27.2
	-15.0	-16.0	76.7	22.2	76.4	23.6	76.2	24.9	76.1	25.5	75.9	26.2	75.7	27.5	75.4	28.8
	-12.0	-13.0	83.1	23.6	82.8	24.8	82.5	26.1	82.3	26.8	82.1	27.4	81.8	28.7	81.4	29.9
	-9.0	-10.0	90.0	24.8	89.6	26.1	89.2	27.3	88.9	27.9	88.7	28.6	88.3	29.8	87.8	31.0
	-7.0	-8.0	94.8	25.6	94.4	26.9	93.9	28.1	93.6	28.7	93.4	29.3	92.8	30.6	92.3	31.8
	-5.0	-6.0	99.8	26.4	99.3	27.6	98.7	28.8	98.4	29.5	98.1	30.1	97.6	31.3	97.0	32.5
161	-3.0	-4.0	104	27.2	104	28.4	103	29.6	103	30.2	103	30.8	102	32.0	101	33.2
	-1.0	-2.0	110	27.9	109	29.1	108	30.3	108	30.9	108	31.5	107	32.7	106	33.9
(140%)	0.0	-1.0	112	28.3	112	29.5	111	30.7	111	31.3	110	31.9	109	33.1	109	34.3
	2.0	1.0	118	29.0	117	30.2	116	31.4	116	32.0	115	32.6	115	33.8	114	35.0
	5.0	4.0	126	30.1	125	31.3	124	32.5	124	33.1	124	33.7	123	34.9	122	36.1
	7.0	6.0	132	30.8	131	32.0	130	33.2	130	33.8	129	34.5	128	35.7	127	36.9
	9.0	7.8	137	31.5	136	32.7	135	33.9	135	34.5	134	35.1	133	36.3	128	35.9
	12.0	10.6	146	32.5	144	33.8	143	35.0	143	35.6	142	36.2	139	36.7	128	33.6
	15.0	13.5	154	33.6	153	34.9	152	36.1	151	36.7	150	37.1	139	34.2	128	31.4
	-19.3	-20.0	68.8	21.0	68.7	22.4	68.5	23.8	68.4	24.5	68.4	25.1	68.2	26.5	68.0	27.9
	-15.0	-16.0	76.6	23.0	76.3	24.3	76.0	25.6	75.9	26.2	75.8	26.9	75.5	28.2	75.2	29.5
	-12.0	-13.0	82.9	24.3	82.6	25.6	82.3	26.9	82.1	27.5	81.9	28.1	81.5	29.4	81.2	30.7
	-9.0	-10.0	89.7	25.6	89.3	26.9	88.9	28.1	88.7	28.7	88.4	29.3	88.0	30.6	87.5	31.8
	-7.0	-8.0	94.5	26.5	94.0	27.7	93.5	28.9	93.3	29.5	93.0	30.1	92.5	31.4	92.0	32.6
	-5.0	-6.0	99.4	27.3	98.9	28.5	98.3	29.7	98.0	30.3	97.7	30.9	97.2	32.1	96.6	33.3
149	-3.0	-4.0	104	28.1	103	29.3	103	30.5	102	31.1	102	31.7	101	32.9	101	34.1
	-1.0	-2.0	109	28.9	109	30.1	108	31.3	107	31.9	107	32.5	106	33.7	106	34.9
(130%)	0.0	-1.0	112	29.3	111	30.5	110	31.6	110	32.2	110	32.8	109	34.0	108	35.2
	2.0	1.0	117	30.0	116	31.2	116	32.4	115	33.0	115	33.6	114	34.8	113	36.0
	5.0	4.0	125	31.2	125	32.4	124	33.6	123	34.2	123	34.8	122	36.0	119	36.3
	7.0	6.0	131	32.0	130	33.2	129	34.4	129	35.0	128	35.6	127	36.8	119	34.7
	9.0	7.8	136	32.7	135	33.9	134	35.1	134	35.7	133	36.3	129	36.2	119	33.2
	12.0	10.6	144	33.8	143	35.0	142	36.2	141	36.8	139	36.7	129	33.8	119	31.1
	15.0	13.5	153	35.0	151	36.2	149	36.9	144	35.6	139	34.2	129	31.6	119	29.0
	-19.3	-20.0	68.7	21.8	68.6	23.2	68.4	24.6	68.3	25.2	68.3	25.9	68.1	27.3	67.9	28.6
	-15.0	-16.0	76.4	23.8	76.1	25.1	75.9	26.4	75.7	27.1	75.6	27.7	75.3	29.0	75.1	30.3
	-12.0	-13.0	82.7	25.2	82.4	26.5	82.0	27.7	81.8	28.4	81.7	29.0	81.3	30.3	80.9	31.5
	-9.0	-10.0	89.4	26.5	89.0	27.8	88.6	29.0	88.3	29.6	88.1	30.3	87.7	31.5	87.2	32.7
	-7.0	-8.0	94.1	27.4	93.6	28.6	93.1	29.9	92.9	30.5	92.6	31.1	92.1	32.3	91.6	33.5
	-5.0	-6.0	99.0	28.3	98.4	29.5	97.8	30.7	97.6	31.3	97.3	31.9	96.7	33.1	96.1	34.3
138	-3.0	-4.0	103	29.1	103	30.3	102	31.5	102	32.1	102	32.7	101	33.9	100	35.1
	-1.0	-2.0	109	30.0	108	31.1	107	32.3	107	32.9	106	33.5	106	34.7	105	35.9
(120%)	0.0	-1.0	111	30.4	110	31.6	110	32.8	109	33.3	109	33.9	108	35.1	107	36.3
	2.0	1.0	116	31.2	116	32.4	115	33.6	114	34.2	114	34.8	113	35.9	110	35.9
	5.0	4.0	125	32.4	124	33.6	123	34.8	122	35.4	122	36.0	119	36.3	110	33.4
	7.0	6.0	130	33.3	129	34.5	128	35.7	127	36.2	127	36.8	119	34.7	110	31.9
	9.0	7.8	135	34.0	134	35.2	133	36.4	132	37.0	128	35.9	119	33.2	110	30.5
	12.0	10.6	143	35.3	142	36.5	138	36.2	133	34.9	128	33.6	119	31.1	110	28.6
	15.0	13.5	151	36.6	147	36.3	138	33.8	133	32.6	128	31.4	119	29.0	110	26.7
	-19.3	-20.0	68.6	22.8	68.5	24.1	68.3	25.5	68.2	26.1	68.2	26.8	68.0	28.2	67.8	29.5
	-15.0	-16.0	76.2	24.8	75.9	26.1	75.7	27.4	75.5	28.0	75.4	28.7	75.1	30.0	74.9	31.3
	-12.0	-13.0	82.4	26.2	82.1	27.5	81.7	28.8	81.6	29.4	81.4	30.0	81.0	31.3	80.6	32.5
	-9.0	-10.0	89.1	27.6	88.6	28.9	88.2	30.1	87.9	30.7	87.7	31.3	87.3	32.6	86.8	33.8
	-7.0	-8.0	93.7	28.6	93.2	29.8	92.7	31.0	92.4	31.6	92.1	32.2	91.6	33.4	91.1	34.6
	-5.0	-6.0	98.4	29.5	97.9	30.7	97.3	31.9	97.0	32.5	96.7	33.1	96.1	34.3	95.5	35.5
126	-3.0	-4.0	103	30.3	102	31.5	102	32.7	101	33.3	101	33.9	100	35.1	100	36.3
	-1.0	-2.0	108	31.2	107	32.4	106	33.6	106	34.2	106	34.8	105	36.0	101	35.2
(110%)	0.0	-1.0	110	31.7	110	32.9	109	34.0	108	34.6	108	35.2	107	36.4	101	34.4
	2.0	1.0	116	32.6	115	33.7	114	34.9	113	35.5	113	36.1	109	35.6	101	32.8
	5.0	4.0	123	33.9	122	35.1	122	36.2	121	36.8	118	35.9	109	33.2	101	30.5
	7.0	6.0	129	34.8	128	36.0	126	36.8	122	35.5	118	34.2	109	31.6	101	29.1
	9.0	7.8	134	35.6	133	36.8	126	35.2	122	34.0	118	32.7	109	30.3	101	27.9
	12.0	10.6	141	36.9	134	35.3	126	33.0	122	31.8	118	30.7	109	28.4	101	26.1
	15.0	13.5	143	35.3	134	33.0	126	30.8	122	29.7	118	28.6	109	26.5	101	24.4

TC : Total Capacity kW.

PI : Power Input kW (Compressor + Outdoor fan motor).

The data is based on the following conditions. Pipe length : 7.5 m; Height difference : 0 m.

MODEL SELECTION

HEATING CAPACITY

■ MODELS : AJ*126L + AJ*126U + AJ*A72U

• CAPACITY : 102kW (36HP)

Total rated heating capacity of indoor unit	Outdoor temperature		Indoor temperature													
			16°CDB		18°CDB		20°CDB		21°CDB		22°CDB		24°CDB		26°CDB	
	(°CDB)	(°CWB)	TC	PI	TC	PI	TC	PI	TC	PI	TC	PI	TC	PI	TC	PI
	-19.3	-20.0	68.5	23.9	68.3	25.2	68.2	26.6	68.1	27.2	68.0	27.9	67.8	29.3	67.7	30.6
	-15.0	-16.0	76.0	26.0	75.7	27.2	75.4	28.5	75.3	29.2	75.2	29.8	74.9	31.1	74.6	32.4
	-12.0	-13.0	82.1	27.5	81.7	28.7	81.4	30.0	81.2	30.6	81.0	31.2	80.7	32.5	80.3	33.7
	-9.0	-10.0	88.6	28.9	88.2	30.2	87.7	31.4	87.5	32.0	87.2	32.6	86.8	33.8	86.3	35.0
	-7.0	-8.0	93.1	29.9	92.6	31.1	92.1	32.3	91.8	32.9	91.6	33.5	91.0	34.7	90.5	35.9
	-5.0	-6.0	97.8	30.9	97.2	32.0	96.6	33.2	96.3	33.8	96.0	34.4	95.4	35.6	92.0	35.1
115	-3.0	-4.0	102	31.8	101	33.0	101	34.2	100	34.7	100	35.3	99.5	36.3	92.0	33.5
	-1.0	-2.0	107	32.7	106	33.9	105	35.1	105	35.7	105	36.3	99.7	34.7	92.0	31.9
(100%)	0.0	-1.0	109	33.2	109	34.4	108	35.6	107	36.1	107	36.5	99.7	33.9	92.0	31.2
	2.0	1.0	114	34.2	114	35.3	113	36.5	111	36.2	107	34.8	99.7	32.3	92.0	29.7
	5.0	4.0	122	35.6	121	36.8	115	34.9	111	33.6	107	32.4	99.7	30.0	92.0	27.7
	7.0	6.0	127	36.6	122	35.6	115	33.2	111	32.1	107	30.9	99.7	28.7	92.0	26.4
	9.0	7.8	130	36.4	122	34.1	115	31.9	111	30.7	107	29.6	99.7	27.5	92.0	25.3
	12.0	10.6	130	34.1	122	31.9	115	29.8	111	28.8	107	27.8	99.7	25.7	92.0	23.7
	15.0	13.5	130	31.8	122	29.8	115	27.9	111	26.9	107	25.9	99.7	24.1	92.0	22.2
	-19.3	-20.0	68.4	25.2	68.2	26.6	68.0	27.9	67.9	28.6	67.8	29.2	67.7	30.6	67.5	31.9
	-15.0	-16.0	75.7	27.4	75.4	28.7	75.1	29.9	75.0	30.6	74.9	31.2	74.6	32.5	74.3	33.8
	-12.0	-13.0	81.7	29.0	81.3	30.2	81.0	31.4	80.8	32.1	80.6	32.7	80.2	33.9	79.8	35.2
	-9.0	-10.0	88.0	30.5	87.6	31.7	87.1	32.9	86.9	33.5	86.7	34.1	86.2	35.3	82.8	34.7
	-7.0	-8.0	92.4	31.5	91.9	32.7	91.4	33.9	91.1	34.5	90.9	35.1	89.6	35.8	82.8	33.1
	-5.0	-6.0	97.0	32.5	96.4	33.7	95.8	34.9	95.5	35.5	95.2	36.1	89.7	34.2	82.8	31.6
103	-3.0	-4.0	101	33.5	100	34.7	100	35.9	99.8	36.4	96.6	35.2	89.7	32.6	82.8	30.1
	-1.0	-2.0	106	34.5	105	35.7	103	36.0	100	34.8	96.6	33.6	89.7	31.1	82.8	28.7
(90%)	0.0	-1.0	108	35.1	107	36.2	103	35.2	100	34.0	96.6	32.8	89.7	30.4	82.8	28.0
	2.0	1.0	113	36.1	110	35.9	103	33.6	100	32.4	96.6	31.3	89.7	29.0	82.8	26.7
	5.0	4.0	117	35.6	110	33.4	103	31.2	100	30.2	96.6	29.1	89.7	27.0	82.8	24.9
	7.0	6.0	117	33.9	110	31.9	103	29.8	100	28.8	96.6	27.8	89.7	25.7	82.8	23.8
	9.0	7.8	117	32.5	110	30.5	103	28.5	100	27.6	96.6	26.6	89.7	24.7	82.8	22.8
	12.0	10.6	117	30.4	110	28.6	103	26.7	100	25.8	96.6	24.9	89.7	23.1	82.8	21.4
	15.0	13.5	117	28.5	110	26.7	103	25.0	100	24.2	96.6	23.3	89.7	21.6	82.8	20.0
	-19.3	-20.0	68.1	26.9	68.0	28.2	67.8	29.5	67.7	30.2	67.6	30.9	67.4	32.2	67.2	33.5
	-15.0	-16.0	75.3	29.1	75.0	30.4	74.8	31.7	74.6	32.3	74.5	32.9	74.2	34.2	73.3	35.1
	-12.0	-13.0	81.2	30.8	80.8	32.0	80.4	33.3	80.2	33.9	80.0	34.5	79.4	35.5	73.6	33.0
	-9.0	-10.0	87.3	32.4	86.9	33.6	86.4	34.8	86.2	35.4	85.6	35.8	79.7	33.4	73.6	30.8
	-7.0	-8.0	91.6	33.5	91.1	34.7	90.5	35.9	88.9	35.6	85.9	34.3	79.7	31.9	73.6	29.4
	-5.0	-6.0	95.9	34.6	95.4	35.7	92.0	35.1	88.9	33.9	85.9	32.7	79.7	30.4	73.6	28.1
92.0	-3.0	-4.0	100	35.7	98.1	35.8	92.0	33.5	88.9	32.4	85.9	31.2	79.7	29.0	73.6	26.8
	-1.0	-2.0	104	36.3	98.1	34.1	92.0	31.9	88.9	30.9	85.9	29.8	79.7	27.7	73.6	25.5
(80%)	0.0	-1.0	104	35.5	98.1	33.3	92.0	31.2	88.9	30.1	85.9	29.1	79.7	27.0	73.6	24.9
	2.0	1.0	104	33.8	98.1	31.8	92.0	29.7	88.9	28.7	85.9	27.7	79.7	25.8	73.6	23.8
	5.0	4.0	104	31.5	98.1	29.6	92.0	27.7	88.9	26.8	85.9	25.8	79.7	24.0	73.6	22.2
	7.0	6.0	104	30.0	98.1	28.2	92.0	26.4	88.9	25.5	85.9	24.6	79.7	22.9	73.6	21.2
	9.0	7.8	104	28.8	98.1	27.0	92.0	25.3	88.9	24.5	85.9	23.6	79.7	22.0	73.6	20.3
	12.0	10.6	104	26.9	98.1	25.3	92.0	23.7	88.9	22.9	85.9	22.1	79.7	20.6	73.6	19.1
	15.0	13.5	104	25.2	98.1	23.7	92.0	22.2	88.9	21.5	85.9	20.7	79.7	19.3	73.6	17.9
	-19.3	-20.0	67.9	29.0	67.7	30.3	67.5	31.6	67.4	32.3	67.3	33.0	67.1	34.3	64.4	33.6
	-15.0	-16.0	74.8	31.3	74.6	32.6	74.3	33.9	74.1	34.5	74.0	35.1	69.8	33.4	64.4	30.9
	-12.0	-13.0	80.5	33.1	80.1	34.3	79.7	35.5	77.8	34.9	75.1	33.7	69.8	31.3	64.4	28.9
	-9.0	-10.0	86.4	34.8	85.6	35.8	80.5	33.7	77.8	32.6	75.1	31.5	69.8	29.2	64.4	27.0
	-7.0	-8.0	90.5	36.0	85.9	34.3	80.5	32.2	77.8	31.1	75.1	30.0	69.8	27.9	64.4	25.8
	-5.0	-6.0	91.2	34.8	85.9	32.7	80.5	30.7	77.8	29.7	75.1	28.7	69.8	26.6	64.4	24.6
80.5	-3.0	-4.0	91.2	33.2	85.9	31.2	80.5	29.3	77.8	28.3	75.1	27.3	69.8	25.4	64.4	23.5
	-1.0	-2.0	91.2	31.7	85.9	29.8	80.5	27.9	77.8	27.0	75.1	26.1	69.8	24.2	64.4	22.4
(70%)	0.0	-1.0	91.2	30.9	85.9	29.1	80.5	27.3	77.8	26.4	75.1	25.5	69.8	23.7	64.4	21.9
	2.0	1.0	91.2	29.5	85.9	27.7	80.5	26.0	77.8	25.1	75.1	24.3	69.8	22.6	64.4	20.9
	5.0	4.0	91.2	27.5	85.9	25.8	80.5	24.2	77.8	23.4	75.1	22.6	69.8	21.1	64.4	19.5
	7.0	6.0	91.2	26.2	85.9	24.6	80.5	23.1	77.8	22.4	75.1	21.6	69.8	20.1	64.4	18.6
	9.0	7.8	91.2	25.1	85.9	23.6	80.5	22.2	77.8	21.4	75.1	20.7	69.8	19.3	64.4	17.9
	12.0	10.6	91.2	23.5	85.9	22.1	80.5	20.8	77.8	20.1	75.1	19.4	69.8	18.1	64.4	16.8
	15.0	13.5	91.2	22.0	85.9	20.7	80.5	19.5	77.8	18.8	75.1	18.2	69.8	17.0	64.4	15.8
	-19.3	-20.0	67.5	31.8	67.3	33.1	67.1	34.4	66.4	34.5	64.4	33.6	59.8	31.3	55.2	29.0
	-15.0	-16.0	74.2	34.3	73.3	35.0	69.0	33.1	66.7	32.0	64.4	30.9	59.8	28.8	55.2	26.7
	-12.0	-13.0	78.2	35.0	73.6	33.0	69.0	31.0	66.7	30.0	64.4	29.0	59.8	26.9	55.2	25.0
	-9.0	-10.0	78.2	32.7	73.6	30.8	69.0	28.9	66.7	28.0	64.4	27.0	59.8	25.2	55.2	23.3
	-7.0	-8.0	78.2	31.2	73.6	29.4	69.0	27.6	66.7	26.7	64.4	25.8	59.8	24.0	55.2	22.3
	-5.0	-6.0	78.2	29.8	73.6	28.1	69.0	26.3	66.7	25.5	64.4	24.6	59.8	22.9	55.2	21.3
69.0	-3.0	-4.0	78.2	28.4	73.6	26.8	69.0	25.1	66.7	24.3	64.4	23.5	59.8	21.9	55.2	20.3
	-1.0	-2.0	78.2	27.1	73.6	25.5	69.0	24.0	66.7	23.2	64.4	22.4	59.8	20.9	55.2	19.4
(60%)	0.0	-1.0	78.2	26.5	73.6	24.9	69.0	23.4	66.7	22.7	64.4	21.9	59.8	20.4	55.2	18.9
	2.0	1.0	78.2	25.3	73.6	23.8	69.0	22.3	66.7	21.6	64.4	20.9	59.8	19.5	55.2	18.1
	5.0	4.0	78.2	23.5	73.6	22.2	69.0	20.8	66.7	20.2	64.4	19.5	59.8	18.2	55.2	16.9
	7.0	6.0	78.2	22.5	73.6	21.2	69.0	19.9	66.7	19.3	64.4	18.6	59.8	17.4	55.2	16.1
	9.0	7.8	78.2	21.5	73.6	20.3	69.0	19.1	66.7	18.5	64.4	17.9	59.8	16.7	55.2	15.5
	12.0	10.6	78.2	20.2	73.6	19.1	69.0	17.9	66.7	17.4	64.4	16.8	59.8	15.7	55.2	14.6
	15.0	13.5	78.2	18.9	73.6	17.9	69.0	16.8	66.7	16.3	64.4	15.8	59.8	14.7	55.2	13.7
	-19.3	-20.0	65.2	34.0	61.3	32.0	57.5	30.1	55.6	29.1	53.7	28.2	49.8	26.3	46.0	24.4
	-15.0	-16.0	65.2	31.3	61.3	29.5	57.5	27.7	55.6	26.8	53.7	25.9	49.8	24.2	46.0	22.4
	-12.0	-13.0	65.2	29.3	61.3	27.6	57.5	25.9	55.6	25.1	53.7	24.3	49.8	22.6	46.0	21.0
	-9.0	-10.0	65.2	27.4	61.3	25.8	57.5	24.2	55.6	23.5	53.7	22.7	49.8	21.2	46.0	19.6
	-7.0	-8.0	65.2	26.1	61.3	24.6	57.5	23.1	55.6	22.4	53.7	21.7	49.8	20.2	46.0	18.8
	-5.0	-6.0	65.2	24.9	61.3	23.5	57.5	22.1	55.6	21.4	53.7	20.7	49.8	19.3	46.0	17.9
57.5	-3.0	-4.0	65.2	23.8	61.3	22.4	57.5	21.1	55.6	20.4	53.7	19.8	49.8	18.4	46.0	17.1
	-1.0	-2.0	65.2	22.7	61.3	21.4	57.5	20.1	55.6	19.5	53.7	18.9	49.8	17.6	46.0	16.4
(50%)	0.0	-1.0	65.2	22.2	61.3	20.9	57.5	19.7	55.6	19.1	53.7	18.4	49.8	17.2	46.0	16.0
	2.0	1.0	65.2	21.1	61.3	20.0	57.5	18.8	55.6	18.2	53.7	17.6	49.8	16.5	46.0	15.3
	5.0	4.0	65.2	19.7	61.3	18.6	57.5	17.5	55.6	17.0	53.7	16.5	49.8	15.4	46.0	14.3
	7.0	6.0	65.2	18.8	61.3	17.8	57.5	16.8	55.6	16.2	53.7	15.7	49.8	14.7	46.0	13.7
	9.0	7.8	65.2	18.1	61.3	17.1	57.5	16.1	55.6	15.6	53.7	15.1	49.8	14.1	46.0	13.2
	12.0	10.6	65.2	17.0	61.3	16.1	57.5	15.1	55.6	14.7	53.7	14.2	49.8	13.3	46.0	12.4
	15.0	13.5	65.2	15.9	61.3	15.1	57.5	14.2	55.6	13.8	53.7	13.4	49.8	12.5	46.0	11.7

TC : Total Capacity kW.

PI : Power Input kW (Compressor + Outdoor fan motor).

The data is based on the following conditions. Pipe length : 7.5 m; Height difference : 0 m.

MODEL SELECTION

■ MODELS : AJ*126L + AJ*126U + AJ*A90U

• CAPACITY : 108kW (38HP)

Total rated heating capacity of indoor unit	Outdoor temperature		Indoor temperature													
			16°CDB		18°CDB		20°CDB		21°CDB		22°CDB		24°CDB		26°CDB	
	(°CDB)	(°CWB)	TC	PI	TC	PI	TC	PI	TC	PI	TC	PI	TC	PI	TC	PI
	-19.3	-20.0	73.2	20.8	73.0	22.2	72.8	23.7	72.8	24.4	72.7	25.1	72.5	26.6	72.3	28.0
	-15.0	-16.0	81.5	22.7	81.2	24.1	81.0	25.5	80.8	26.2	80.7	26.9	80.4	28.3	80.1	29.6
	-12.0	-13.0	88.4	24.1	88.0	25.4	87.7	26.8	87.5	27.4	87.3	28.1	86.9	29.5	86.5	30.8
	-9.0	-10.0	95.7	25.3	95.3	26.7	94.8	28.0	94.6	28.7	94.4	29.3	93.9	30.6	93.4	32.0
	-7.0	-8.0	100	26.2	100	27.5	99.9	28.8	99.6	29.4	99.3	30.1	98.8	31.4	98.3	32.7
	-5.0	-6.0	106	27.0	105	28.3	105	29.6	104	30.2	104	30.8	103	32.1	103	33.4
183	-3.0	-4.0	111	27.7	111	29.0	110	30.3	110	30.9	109	31.6	109	32.9	108	34.2
	-1.0	-2.0	117	28.5	116	29.8	115	31.0	115	31.7	115	32.3	114	33.6	113	34.9
(150%)	0.0	-1.0	120	28.9	119	30.1	118	31.4	118	32.1	118	32.7	117	34.0	116	35.2
	2.0	1.0	126	29.6	125	30.9	124	32.1	124	32.8	123	33.4	122	34.7	121	36.0
	5.0	4.0	135	30.7	134	32.0	133	33.2	132	33.9	132	34.5	131	35.8	130	37.1
	7.0	6.0	141	31.4	140	32.7	139	34.0	138	34.6	138	35.2	137	36.5	136	37.8
	9.0	7.8	147	32.0	145	33.3	144	34.6	144	35.3	143	35.9	142	37.2	141	38.5
	12.0	10.6	156	33.1	154	34.4	153	35.7	152	36.3	152	37.0	150	38.3	146	38.1
	15.0	13.5	165	34.1	164	35.5	162	36.8	161	37.4	161	38.1	158	38.9	146	35.6
	-19.3	-20.0	73.1	21.4	72.9	22.8	72.8	24.3	72.7	25.0	72.6	25.7	72.4	27.2	72.2	28.6
	-15.0	-16.0	81.4	23.4	81.1	24.8	80.8	26.1	80.7	26.8	80.5	27.5	80.3	28.9	80.0	30.3
	-12.0	-13.0	88.2	24.8	87.8	26.1	87.5	27.5	87.3	28.1	87.1	28.8	86.7	30.2	86.3	31.5
	-9.0	-10.0	95.5	26.1	95.1	27.4	94.6	28.7	94.4	29.4	94.1	30.0	93.7	31.4	93.2	32.7
	-7.0	-8.0	100	26.9	100	28.2	99.6	29.5	99.3	30.2	99.0	30.8	98.5	32.1	97.9	33.4
	-5.0	-6.0	105	27.8	105	29.1	104	30.3	104	31.0	104	31.6	103	32.9	102	34.2
170	-3.0	-4.0	111	28.6	110	29.9	110	31.1	109	31.8	109	32.4	108	33.7	107	35.0
	-1.0	-2.0	116	29.4	116	30.6	115	31.9	115	32.5	114	33.2	113	34.5	113	35.7
(140%)	0.0	-1.0	119	29.8	119	31.0	118	32.3	117	32.9	117	33.6	116	34.8	115	36.1
	2.0	1.0	125	30.5	124	31.8	123	33.1	123	33.7	123	34.3	122	35.6	121	36.9
	5.0	4.0	134	31.7	133	33.0	132	34.2	132	34.9	131	35.5	130	36.8	129	38.0
	7.0	6.0	140	32.4	139	33.7	138	35.0	137	35.6	137	36.3	136	37.5	135	38.8
	9.0	7.8	146	33.1	145	34.4	143	35.7	143	36.3	142	37.0	141	38.3	136	37.8
	12.0	10.6	154	34.2	153	35.5	152	36.8	151	37.5	151	38.1	148	38.6	136	35.4
	15.0	13.5	164	35.4	162	36.7	161	38.0	160	38.7	159	39.1	148	36.0	136	33.1
	-19.3	-20.0	73.0	22.1	72.9	23.5	72.7	25.0	72.6	25.7	72.5	26.4	72.3	27.9	72.2	29.3
	-15.0	-16.0	81.2	24.1	80.9	25.5	80.7	26.9	80.5	27.6	80.4	28.3	80.1	29.6	79.8	31.0
	-12.0	-13.0	88.0	25.6	87.6	26.9	87.3	28.3	87.1	28.9	86.9	29.6	86.5	30.9	86.1	32.3
	-9.0	-10.0	95.2	26.9	94.8	28.3	94.3	29.6	94.1	30.2	93.8	30.9	93.3	32.2	92.9	33.5
	-7.0	-8.0	100	27.8	99.7	29.1	99.2	30.4	98.9	31.1	98.7	31.7	98.1	33.0	97.6	34.3
	-5.0	-6.0	105	28.7	104	30.0	104	31.3	103	31.9	103	32.5	103	33.8	102	35.1
158	-3.0	-4.0	110	29.5	110	30.8	109	32.1	109	32.7	108	33.4	108	34.6	107	35.9
	-1.0	-2.0	116	30.4	115	31.6	114	32.9	114	33.5	114	34.2	113	35.4	112	36.7
(130%)	0.0	-1.0	119	30.8	118	32.0	117	33.3	117	33.9	116	34.6	116	35.8	115	37.1
	2.0	1.0	124	31.6	124	32.9	123	34.1	122	34.8	122	35.4	121	36.6	120	37.9
	5.0	4.0	133	32.8	132	34.1	131	35.4	131	36.0	130	36.6	129	37.9	126	38.3
	7.0	6.0	139	33.6	138	34.9	137	36.2	136	36.8	136	37.4	135	38.7	126	36.5
	9.0	7.8	145	34.4	143	35.7	142	36.9	142	37.6	141	38.2	137	38.1	126	34.9
	12.0	10.6	153	35.6	152	36.9	151	38.1	150	38.8	148	38.6	137	35.6	126	32.7
	15.0	13.5	162	36.8	161	38.1	158	38.9	153	37.5	148	36.0	137	33.3	126	30.6
	-19.3	-20.0	72.9	22.9	72.8	24.4	72.6	25.8	72.5	26.5	72.4	27.2	72.2	28.7	72.1	30.1
	-15.0	-16.0	81.0	25.0	80.8	26.4	80.5	27.8	80.4	28.5	80.2	29.1	79.9	30.5	79.6	31.9
	-12.0	-13.0	87.7	26.5	87.4	27.8	87.0	29.2	86.8	29.8	86.6	30.5	86.2	31.8	85.9	33.2
	-9.0	-10.0	94.9	27.9	94.4	29.2	93.9	30.5	93.7	31.2	93.5	31.8	93.0	33.1	92.5	34.5
	-7.0	-8.0	99.9	28.8	99.3	30.1	98.8	31.4	98.5	32.1	98.3	32.7	97.7	34.0	97.1	35.3
	-5.0	-6.0	105	29.7	104	31.0	103	32.3	103	32.9	103	33.6	102	34.9	101	36.1
146	-3.0	-4.0	110	30.6	109	31.9	108	33.2	108	33.8	108	34.4	107	35.7	106	37.0
	-1.0	-2.0	115	31.5	114	32.8	114	34.0	113	34.7	113	35.3	112	36.6	111	37.8
(120%)	0.0	-1.0	118	32.0	117	33.2	116	34.5	116	35.1	116	35.7	115	37.0	114	38.2
	2.0	1.0	124	32.8	123	34.1	122	35.3	121	36.0	121	36.6	120	37.8	117	37.8
	5.0	4.0	132	34.1	131	35.4	130	36.6	130	37.3	129	37.9	126	38.3	117	35.2
	7.0	6.0	138	35.0	137	36.3	136	37.5	135	38.2	135	38.8	126	36.5	117	33.5
	9.0	7.8	143	35.8	142	37.1	141	38.4	140	39.0	136	37.8	126	34.9	117	32.1
	12.0	10.6	152	37.1	150	38.4	146	38.1	141	36.8	136	35.4	126	32.7	117	30.1
	15.0	13.5	160	38.5	156	38.2	146	35.6	141	34.3	136	33.1	126	30.6	117	28.1
	-19.3	-20.0	72.8	23.9	72.6	25.3	72.5	26.8	72.4	27.5	72.3	28.2	72.1	29.6	71.9	31.1
	-15.0	-16.0	80.8	26.1	80.6	27.4	80.3	28.8	80.1	29.5	80.0	30.2	79.7	31.5	79.4	32.9
	-12.0	-13.0	87.4	27.6	87.1	28.9	86.7	30.3	86.5	30.9	86.3	31.6	85.9	32.9	85.5	34.2
	-9.0	-10.0	94.5	29.1	94.0	30.4	93.5	31.7	93.3	32.3	93.1	33.0	92.6	34.3	92.1	35.6
	-7.0	-8.0	99.4	30.0	98.8	31.3	98.3	32.6	98.0	33.2	97.7	33.9	97.2	35.2	96.6	36.4
	-5.0	-6.0	104	31.0	103	32.3	103	33.5	102	34.2	102	34.8	101	36.1	101	37.3
134	-3.0	-4.0	109	31.9	108	33.2	108	34.5	107	35.1	107	35.7	106	37.0	106	38.2
	-1.0	-2.0	114	32.9	114	34.1	113	35.4	113	36.0	112	36.6	111	37.9	107	37.1
(110%)	0.0	-1.0	117	33.3	116	34.6	116	35.8	115	36.5	115	37.1	114	38.3	107	36.2
	2.0	1.0	123	34.3	122	35.5	121	36.8	120	37.4	120	38.0	116	37.5	107	34.5
	5.0	4.0	131	35.7	130	36.9	129	38.2	128	38.8	125	37.7	116	34.9	107	32.1
	7.0	6.0	137	36.6	136	37.9	134	38.7	129	37.4	125	36.0	116	33.3	107	30.6
	9.0	7.8	142	37.5	141	38.7	134	37.1	129	35.8	125	34.5	116	31.9	107	29.3
	12.0	10.6	150	38.9	143	37.2	134	34.7	129	33.5	125	32.3	116	29.8	107	27.5
	15.0	13.5	152	37.1	143	34.8	134	32.4	129	31.3	125	30.1	116	27.9	107	25.7

TC : Total Capacity kW.

PI : Power Input kW (Compressor + Outdoor fan motor).

The data is based on the following conditions. Pipe length : 7.5 m; Height difference : 0 m.

■ MODELS : AJ*126L + AJ*126U + AJ*A90U

• CAPACITY : 108kW (38HP)

Total rated heating capacity of indoor unit	Outdoor temperature		Indoor temperature													
			16°CDB		18°CDB		20°CDB		21°CDB		22°CDB		24°CDB		26°CDB	
	(°CDB)	(°CWB)	TC	PI	TC	PI	TC	PI	TC	PI	TC	PI	TC	PI	TC	PI
	-19.3	-20.0	72.7	25.1	72.5	26.5	72.3	27.9	72.2	28.7	72.2	29.4	72.0	30.8	71.8	32.2
	-15.0	-16.0	80.6	27.3	80.3	28.7	80.0	30.0	79.9	30.7	79.7	31.4	79.4	32.7	79.1	34.1
	-12.0	-13.0	87.1	28.9	86.7	30.2	86.3	31.5	86.1	32.2	86.0	32.9	85.6	34.2	85.2	35.5
	-9.0	-10.0	94.0	30.4	93.5	31.7	93.0	33.0	92.8	33.7	92.6	34.3	92.1	35.6	91.6	36.9
	-7.0	-8.0	98.8	31.5	98.2	32.7	97.7	34.0	97.4	34.6	97.1	35.3	96.6	36.5	96.0	37.8
	-5.0	-6.0	103	32.5	103	33.7	102	35.0	102	35.6	101	36.2	101	37.5	97.6	37.0
122	-3.0	-4.0	108	33.5	108	34.7	107	36.0	107	36.6	106	37.2	105	38.2	97.6	35.3
	-1.0	-2.0	113	34.5	113	35.7	112	36.9	112	37.6	111	38.2	105	36.5	97.6	33.6
(100%)	0.0	-1.0	116	35.0	115	36.2	114	37.4	114	38.0	113	38.5	105	35.6	97.6	32.8
	2.0	1.0	121	36.0	121	37.2	120	38.4	117	38.1	113	36.7	105	34.0	97.6	31.3
	5.0	4.0	129	37.5	129	38.7	122	36.7	117	35.4	113	34.1	105	31.6	97.6	29.1
	7.0	6.0	135	38.5	130	37.5	122	35.0	117	33.8	113	32.6	105	30.1	97.6	27.8
	9.0	7.8	138	38.3	130	35.9	122	33.5	117	32.4	113	31.2	105	28.9	97.6	26.6
	12.0	10.6	138	35.8	130	33.6	122	31.4	117	30.3	113	29.2	105	27.0	97.6	24.9
	15.0	13.5	138	33.5	130	31.4	122	29.3	117	28.3	113	27.3	105	25.3	97.6	23.3
	-19.3	-20.0	72.5	26.5	72.3	27.9	72.2	29.3	72.1	30.1	72.0	30.8	71.8	32.2	71.6	33.6
	-15.0	-16.0	80.3	28.8	80.0	30.1	79.7	31.5	79.6	32.2	79.4	32.9	79.1	34.2	78.8	35.6
	-12.0	-13.0	86.6	30.5	86.3	31.8	85.9	33.1	85.7	33.7	85.5	34.4	85.1	35.7	84.7	37.0
	-9.0	-10.0	93.4	32.1	92.9	33.4	92.4	34.7	92.2	35.3	91.9	35.9	91.4	37.2	87.8	36.5
	-7.0	-8.0	98.1	33.2	97.5	34.4	97.0	35.7	96.7	36.3	96.4	37.0	95.1	37.7	87.8	34.8
	-5.0	-6.0	102	34.2	102	35.5	101	36.7	101	37.4	100	38.0	95.2	36.0	87.8	33.2
109	-3.0	-4.0	107	35.3	107	36.5	106	37.8	105	38.3	102	37.1	95.2	34.4	87.8	31.7
	-1.0	-2.0	112	36.4	112	37.6	109	38.0	106	36.6	102	35.3	95.2	32.8	87.8	30.2
(90%)	0.0	-1.0	115	36.9	114	38.1	109	37.1	106	35.8	102	34.5	95.2	32.0	87.8	29.5
	2.0	1.0	120	38.0	117	37.8	109	35.3	106	34.1	102	32.9	95.2	30.5	87.8	28.1
	5.0	4.0	124	37.5	117	35.2	109	32.9	106	31.7	102	30.6	95.2	28.4	87.8	26.2
	7.0	6.0	124	35.7	117	33.5	109	31.3	106	30.3	102	29.2	95.2	27.1	87.8	25.0
	9.0	7.8	124	34.2	117	32.1	109	30.0	106	29.0	102	28.0	95.2	25.9	87.8	23.9
	12.0	10.6	124	32.0	117	30.1	109	28.1	106	27.2	102	26.2	95.2	24.3	87.8	22.4
	15.0	13.5	124	29.9	117	28.1	109	26.3	106	25.4	102	24.5	95.2	22.7	87.8	21.0
	-19.3	-20.0	72.3	28.3	72.1	29.7	71.9	31.1	71.8	31.8	71.7	32.5	71.5	33.9	71.3	35.3
	-15.0	-16.0	79.9	30.6	79.6	32.0	79.3	33.3	79.2	34.0	79.0	34.7	78.7	36.0	77.8	36.9
	-12.0	-13.0	86.1	32.4	85.7	33.7	85.3	35.0	85.1	35.6	84.9	36.3	84.2	37.4	78.1	34.7
	-9.0	-10.0	92.6	34.1	92.1	35.4	91.7	36.7	91.4	37.3	90.8	37.7	84.6	35.1	78.1	32.4
	-7.0	-8.0	97.2	35.3	96.6	36.5	96.0	37.8	94.3	37.4	91.1	36.1	84.6	33.5	78.1	31.0
	-5.0	-6.0	101	36.4	101	37.6	97.6	37.0	94.3	35.7	91.1	34.5	84.6	32.0	78.1	29.5
97.6	-3.0	-4.0	106	37.5	104	37.7	97.6	35.3	94.3	34.1	91.1	32.9	84.6	30.5	78.1	28.2
	-1.0	-2.0	110	38.3	104	35.9	97.6	33.6	94.3	32.5	91.1	31.3	84.6	29.1	78.1	26.9
(80%)	0.0	-1.0	110	37.3	104	35.1	97.6	32.8	94.3	31.7	91.1	30.6	84.6	28.4	78.1	26.2
	2.0	1.0	110	35.6	104	33.4	97.6	31.3	94.3	30.2	91.1	29.2	84.6	27.1	78.1	25.0
	5.0	4.0	110	33.1	104	31.1	97.6	29.1	94.3	28.1	91.1	27.2	84.6	25.2	78.1	23.3
	7.0	6.0	110	31.6	104	29.7	97.6	27.8	94.3	26.8	91.1	25.9	84.6	24.1	78.1	22.2
	9.0	7.8	110	30.3	104	28.4	97.6	26.6	94.3	25.7	91.1	24.8	84.6	23.1	78.1	21.3
	12.0	10.6	110	28.3	104	26.6	97.6	24.9	94.3	24.1	91.1	23.3	84.6	21.6	78.1	20.0
	15.0	13.5	110	26.5	104	24.9	97.6	23.3	94.3	22.5	91.1	21.8	84.6	20.2	78.1	18.7
	-19.3	-20.0	72.0	30.5	71.8	31.9	71.6	33.3	71.5	34.0	71.4	34.7	71.2	36.1	68.3	35.4
	-15.0	-16.0	79.4	33.0	79.1	34.3	78.8	35.7	78.6	36.3	78.5	37.0	74.0	35.2	68.3	32.6
	-12.0	-13.0	85.4	34.8	85.0	36.1	84.6	37.4	82.6	36.7	79.7	35.5	74.0	33.0	68.3	30.5
	-9.0	-10.0	91.7	36.7	90.8	37.7	85.4	35.5	82.6	34.3	79.7	33.1	74.0	30.8	68.3	28.4
	-7.0	-8.0	96.0	37.9	91.1	36.1	85.4	33.9	82.6	32.7	79.7	31.6	74.0	29.4	68.3	27.1
	-5.0	-6.0	96.8	36.7	91.1	34.5	85.4	32.3	82.6	31.2	79.7	30.1	74.0	28.0	68.3	25.9
85.4	-3.0	-4.0	96.8	35.0	91.1	32.9	85.4	30.8	82.6	29.8	79.7	28.7	74.0	26.7	68.3	24.7
	-1.0	-2.0	96.8	33.3	91.1	31.3	85.4	29.4	82.6	28.4	79.7	27.4	74.0	25.5	68.3	23.6
(70%)	0.0	-1.0	96.8	32.5	91.1	30.6	85.4	28.7	82.6	27.7	79.7	26.8	74.0	24.9	68.3	23.0
	2.0	1.0	96.8	31.0	91.1	29.2	85.4	27.3	82.6	26.4	79.7	25.5	74.0	23.7	68.3	22.0
	5.0	4.0	96.8	28.9	91.1	27.2	85.4	25.5	82.6	24.6	79.7	23.8	74.0	22.1	68.3	20.5
	7.0	6.0	96.8	27.5	91.1	25.9	85.4	24.3	82.6	23.5	79.7	22.7	74.0	21.1	68.3	19.6
	9.0	7.8	96.8	26.4	91.1	24.8	85.4	23.3	82.6	22.5	79.7	21.8	74.0	20.3	68.3	18.8
	12.0	10.6	96.8	24.7	91.1	23.3	85.4	21.8	82.6	21.1	79.7	20.4	74.0	19.0	68.3	17.6
	15.0	13.5	96.8	23.1	91.1	21.8	85.4	20.4	82.6	19.8	79.7	19.1	74.0	17.8	68.3	16.5
	-19.3	-20.0	71.6	33.4	71.4	34.8	71.2	36.2	70.5	36.4	68.3	35.4	63.4	32.9	58.6	30.5
	-15.0	-16.0	78.7	36.1	77.8	36.9	73.2	34.8	70.8	33.7	68.3	32.6	63.4	30.3	58.6	28.0
	-12.0	-13.0	83.0	36.9	78.1	34.7	73.2	32.6	70.8	31.5	68.3	30.5	63.4	28.3	58.6	26.2
	-9.0	-10.0	83.0	34.5	78.1	32.4	73.2	30.4	70.8	29.4	68.3	28.4	63.4	26.5	58.6	24.5
	-7.0	-8.0	83.0	32.9	78.1	31.0	73.2	29.0	70.8	28.1	68.3	27.1	63.4	25.3	58.6	23.4
	-5.0	-6.0	83.0	31.4	78.1	29.5	73.2	27.7	70.8	26.8	68.3	25.9	63.4	24.1	58.6	22.3
73.2	-3.0	-4.0	83.0	29.9	78.1	28.2	73.2	26.4	70.8	25.6	68.3	24.7	63.4	23.0	58.6	21.3
	-1.0	-2.0	83.0	28.5	78.1	26.9	73.2	25.2	70.8	24.4	68.3	23.6	63.4	22.0	58.6	20.3
(60%)	0.0	-1.0	83.0	27.9	78.1	26.2	73.2	24.6	70.8	23.8	68.3	23.0	63.4	21.4	58.6	19.9
	2.0	1.0	83.0	26.6	78.1	25.0	73.2	23.5	70.8	22.7	68.3	22.0	63.4	20.5	58.6	19.0
	5.0	4.0	83.0	24.7	78.1	23.3	73.2	21.9	70.8	21.2	68.3	20.5	63.4	19.1	58.6	17.7
	7.0	6.0	83.0	23.6	78.1	22.2	73.2	20.9	70.8	20.2	68.3	19.6	63.4	18.2	58.6	16.9
	9.0	7.8	83.0	22.6	78.1	21.3	73.2	20.0	70.8	19.4	68.3	18.8	63.4	17.5	58.6	16.3
	12.0	10.6	83.0	21.2	78.1	20.0	73.2	18.8	70.8	18.2	68.3	17.6	63.4	16.4	58.6	15.3
	15.0	13.5	83.0	19.9	78.1	18.7	73.2	17.6	70.8	17.1	68.3	16.5	63.4	15.4	58.6	14.3
	-19.3	-20.0	69.1	35.8	65.1	33.7	61.0	31.7	59.0	30.7	56.9	29.7	52.9	27.6	48.8	25.6
	-15.0	-16.0	69.1	32.9	65.1	31.0	61.0	29.2	59.0	28.2	56.9	27.3	52.9	25.4	48.8	23.6
	-12.0	-13.0	69.1	30.8	65.1	29.0	61.0	27.3	59.0	26.4	56.9	25.5	52.9	23.8	48.8	22.1
	-9.0	-10.0	69.1	28.8	65.1	27.1	61.0	25.5	59.0	24.7	56.9	23.9	52.9	22.2	48.8	20.6
	-7.0	-8.0	69.1	27.5	65.1	25.9	61.0	24.3	59.0	23.6	56.9	22.8	52.9	21.2	48.8	19.7
	-5.0	-6.0	69.1	26.2	65.1	24.7	61.0	23.2	59.0	22.5	56.9	21.7	52.9	20.3	48.8	18.8
61.0	-3.0	-4.0	69.1	25.0	65.1	23.6	61.0	22.2	59.0	21.5	56.9	20.8	52.9	19.4	48.8	18.0
	-1.0	-2.0	69.1	23.8	65.1	22.5	61.0	21.1	59.0	20.5	56.9	19.8	52.9	18.5	48.8	17.2
(50%)	0.0	-1.0	69.1	23.3	65.1	22.0	61.0	20.7	59.0	20.0	56.9	19.4	52.9	18.1	48.8	16.8
	2.0	1.0	69.1	22.2	65.1	21.0	61.0	19.7	59.0	19.1	56.9	18.5	52.9	17.3	48.8	16.0
	5.0	4.0	69.1	20.7	65.1	19.6	61.0	18.4	59.0	17.8	56.9	17.3	52.9	16.1	48.8	15.0
	7.0	6.0	69.1	19.8	65.1	18.7	61.0	17.6	59.0	17.0	56.9	16.5	52.9	15.4	48.8	14.3
	9.0	7.8	69.1	19.0	65.1	17.9	61.0	16.9	59.0	16.4	56.9	15.8	52.9	14.8	48.8	13.8
	12.0	10.6	69.1	17.8	65.1	16.8	61.0	15.9	59.0	15.4	56.9	14.9	52.9	13.9	48.8	13.0
	15.0	13.5	69.1	16.7	65.1	15.8	61.0	14.9	59.0	14.4	56.9	14.0	52.9	13.1	48.8	12.2

TC : Total Capacity kW.

PI : Power Input kW (Compressor + Outdoor fan motor).

The data is based on the following conditions. Pipe length : 7.5 m; Height difference : 0 m.

MODEL SELECTION

■ MODELS : AJ*126L + AJ*126U + AJ*126U

• CAPACITY : 120kW (42HP)

Total rated heating capacity of indoor unit	Outdoor temperature		Indoor temperature													
			16°CDB		18°CDB		20°CDB		21°CDB		22°CDB		24°CDB		26°CDB	
	(°CDB)	(°CWB)	TC	PI	TC	PI	TC	PI	TC	PI	TC	PI	TC	PI	TC	PI
	-19.3	-20.0	80.9	23.5	80.8	25.2	80.7	26.8	80.6	27.6	80.5	28.5	80.4	30.1	80.3	31.8
	-15.0	-16.0	90.1	25.7	89.9	27.3	89.6	28.9	89.5	29.7	89.4	30.5	89.1	32.1	88.9	33.6
	-12.0	-13.0	97.7	27.2	97.4	28.8	97.0	30.3	96.9	31.1	96.7	31.9	96.3	33.4	96.0	35.0
	-9.0	-10.0	105	28.7	105	30.2	104	31.7	104	32.5	104	33.3	104	34.8	103	36.3
	-7.0	-8.0	111	29.6	111	31.1	110	32.6	110	33.4	109	34.1	109	35.6	108	37.1
	-5.0	-6.0	117	30.5	116	32.0	116	33.5	115	34.3	115	35.0	115	36.5	114	38.0
202	-3.0	-4.0	123	31.4	122	32.9	122	34.4	121	35.1	121	35.8	120	37.3	120	38.8
	-1.0	-2.0	129	32.3	129	33.7	128	35.2	127	35.9	127	36.7	126	38.1	125	39.6
(150%)	0.0	-1.0	132	32.7	132	34.2	131	35.6	130	36.4	130	37.1	129	38.6	128	40.0
	2.0	1.0	139	33.5	138	35.0	137	36.5	137	37.2	136	37.9	135	39.4	134	40.8
	5.0	4.0	149	34.8	148	36.2	147	37.7	146	38.4	146	39.2	145	40.6	144	42.1
	7.0	6.0	156	35.6	155	37.1	153	38.5	153	39.3	152	40.0	151	41.5	150	42.9
	9.0	7.8	162	36.3	161	37.8	160	39.3	159	40.0	158	40.7	157	42.2	156	43.7
	12.0	10.6	172	37.5	170	39.0	169	40.5	168	41.2	168	41.9	166	43.4	162	43.3
	15.0	13.5	182	38.7	181	40.2	179	41.7	178	42.5	178	43.2	175	44.2	162	40.5
	-19.3	-20.0	80.9	24.2	80.7	25.9	80.6	27.5	80.6	28.3	80.5	29.2	80.4	30.8	80.2	32.5
	-15.0	-16.0	90.0	26.5	89.8	28.0	89.5	29.6	89.4	30.4	89.3	31.2	89.0	32.8	88.8	34.4
	-12.0	-13.0	97.5	28.0	97.2	29.6	96.9	31.1	96.7	31.9	96.5	32.7	96.2	34.2	95.8	35.8
	-9.0	-10.0	105	29.6	105	31.1	104	32.6	104	33.3	104	34.1	103	35.6	103	37.1
	-7.0	-8.0	111	30.5	110	32.0	110	33.5	109	34.3	109	35.0	109	36.5	108	38.0
	-5.0	-6.0	117	31.5	116	32.9	115	34.4	115	35.2	115	35.9	114	37.4	114	38.9
189	-3.0	-4.0	123	32.4	122	33.9	121	35.3	121	36.1	121	36.8	120	38.3	119	39.7
	-1.0	-2.0	129	33.3	128	34.7	127	36.2	127	36.9	126	37.7	126	39.1	125	40.6
(140%)	0.0	-1.0	132	33.7	131	35.2	130	36.6	130	37.4	129	38.1	129	39.6	128	41.0
	2.0	1.0	138	34.6	137	36.1	137	37.5	136	38.2	136	39.0	135	40.4	134	41.9
	5.0	4.0	148	35.9	147	37.4	146	38.8	146	39.6	145	40.3	144	41.7	143	43.2
	7.0	6.0	155	36.8	154	38.2	153	39.7	152	40.4	151	41.2	150	42.6	149	44.1
	9.0	7.8	161	37.6	160	39.0	159	40.5	158	41.2	157	42.0	156	43.4	151	43.0
	12.0	10.6	171	38.8	169	40.3	168	41.8	167	42.5	167	43.3	163	43.9	151	40.2
	15.0	13.5	181	40.1	179	41.6	178	43.1	177	43.9	176	44.5	163	41.0	151	37.6
	-19.3	-20.0	80.8	25.0	80.7	26.7	80.6	28.3	80.5	29.2	80.4	30.0	80.3	31.6	80.2	33.3
	-15.0	-16.0	89.9	27.3	89.6	28.9	89.4	30.5	89.3	31.3	89.1	32.1	88.9	33.7	88.6	35.2
	-12.0	-13.0	97.3	29.0	97.0	30.5	96.7	32.1	96.5	32.8	96.3	33.6	95.9	35.1	95.6	36.7
	-9.0	-10.0	105	30.5	104	32.0	104	33.5	104	34.3	103	35.0	103	36.5	103	38.0
	-7.0	-8.0	110	31.5	110	33.0	109	34.5	109	35.3	109	36.0	108	37.5	108	39.0
	-5.0	-6.0	116	32.5	116	34.0	115	35.5	115	36.2	114	36.9	114	38.4	113	39.9
175	-3.0	-4.0	122	33.5	121	34.9	121	36.4	120	37.1	120	37.9	119	39.3	119	40.8
	-1.0	-2.0	128	34.4	127	35.9	127	37.3	126	38.1	126	38.8	125	40.2	124	41.7
(130%)	0.0	-1.0	131	34.9	130	36.3	130	37.8	129	38.5	129	39.2	128	40.7	127	42.1
	2.0	1.0	138	35.8	137	37.3	136	38.7	135	39.4	135	40.2	134	41.6	133	43.1
	5.0	4.0	147	37.2	146	38.7	145	40.1	145	40.8	144	41.6	143	43.0	140	43.4
	7.0	6.0	154	38.2	153	39.6	152	41.1	151	41.8	150	42.5	149	44.0	140	41.4
	9.0	7.8	160	39.0	159	40.5	157	41.9	157	42.7	156	43.4	152	43.2	140	39.7
	12.0	10.6	169	40.4	168	41.8	167	43.3	166	44.0	163	43.9	152	40.5	140	37.1
	15.0	13.5	179	41.8	178	43.3	175	44.2	169	42.6	163	41.0	152	37.8	140	34.7
	-19.3	-20.0	80.7	26.0	80.6	27.6	80.5	29.3	80.4	30.1	80.4	30.9	80.2	32.6	80.1	34.2
	-15.0	-16.0	89.7	28.3	89.5	29.9	89.2	31.5	89.1	32.3	89.0	33.1	88.7	34.6	88.4	36.2
	-12.0	-13.0	97.1	30.0	96.8	31.6	96.4	33.1	96.2	33.9	96.1	34.6	95.7	36.2	95.3	37.7
	-9.0	-10.0	104	31.7	104	33.2	104	34.7	103	35.4	103	36.2	103	37.6	102	39.1
	-7.0	-8.0	110	32.7	109	34.2	109	35.7	109	36.4	108	37.1	108	38.6	107	40.1
	-5.0	-6.0	116	33.7	115	35.2	114	36.7	114	37.4	114	38.1	113	39.6	113	41.1
162	-3.0	-4.0	121	34.8	121	36.2	120	37.7	120	38.4	119	39.1	119	40.6	118	42.0
	-1.0	-2.0	127	35.8	127	37.2	126	38.6	126	39.4	125	40.1	124	41.5	124	43.0
(120%)	0.0	-1.0	131	36.3	130	37.7	129	39.1	128	39.9	128	40.6	127	42.0	126	43.4
	2.0	1.0	137	37.2	136	38.7	135	40.1	134	40.8	134	41.6	133	43.0	129	42.9
	5.0	4.0	146	38.7	145	40.2	144	41.6	144	42.3	143	43.0	140	43.4	129	39.9
	7.0	6.0	153	39.7	151	41.2	150	42.6	150	43.3	149	44.1	140	41.4	129	38.1
	9.0	7.8	158	40.7	157	42.1	156	43.5	155	44.3	151	43.0	140	39.7	129	36.5
	12.0	10.6	168	42.1	166	43.6	162	43.3	156	41.8	151	40.2	140	37.1	129	34.1
	15.0	13.5	177	43.7	172	43.5	162	40.5	156	39.0	151	37.6	140	34.7	129	31.9
	-19.3	-20.0	80.7	27.1	80.5	28.7	80.4	30.4	80.3	31.2	80.3	32.0	80.1	33.7	80.0	35.3
	-15.0	-16.0	89.5	29.5	89.3	31.1	89.0	32.7	88.9	33.5	88.8	34.3	88.5	35.8	88.2	37.4
	-12.0	-13.0	96.8	31.3	96.5	32.8	96.1	34.3	95.9	35.1	95.8	35.9	95.4	37.4	95.0	38.9
	-9.0	-10.0	104	33.0	104	34.5	103	36.0	103	36.7	103	37.5	102	38.9	102	40.4
	-7.0	-8.0	110	34.1	109	35.6	108	37.0	108	37.8	108	38.5	107	40.0	107	41.4
	-5.0	-6.0	115	35.2	114	36.6	114	38.1	114	38.8	113	39.5	113	41.0	112	42.4
148	-3.0	-4.0	121	36.2	120	37.7	119	39.1	119	39.8	119	40.6	118	42.0	117	43.4
	-1.0	-2.0	127	37.3	126	38.7	125	40.2	125	40.9	124	41.6	123	43.0	118	42.0
(110%)	0.0	-1.0	130	37.8	129	39.3	128	40.7	128	41.4	127	42.1	126	43.5	118	41.0
	2.0	1.0	136	38.9	135	40.3	134	41.7	133	42.5	133	43.2	128	42.5	118	39.1
	5.0	4.0	145	40.5	144	41.9	143	43.3	142	44.1	138	42.8	128	39.6	118	36.4
	7.0	6.0	151	41.6	150	43.0	148	44.0	143	42.4	138	40.9	128	37.8	118	34.7
	9.0	7.8	157	42.6	156	44.0	148	42.1	143	40.6	138	39.1	128	36.2	118	33.3
	12.0	10.6	166	44.2	158	42.3	148	39.4	143	38.0	138	36.6	128	33.9	118	31.2
	15.0	13.5	168	42.2	158	39.5	148	36.9	143	35.5	138	34.2	128	31.7	118	29.2

TC : Total Capacity kW.

PI : Power Input kW (Compressor + Outdoor fan motor).

The data is based on the following conditions. Pipe length : 7.5 m; Height difference : 0 m.

MODEL SELECTION

■ MODELS : AJ*126L + AJ*126U + AJ*126U

• CAPACITY : 120kW (42HP)

Total rated heating capacity of indoor unit	Outdoor temperature		Indoor temperature													
			16°CDB		18°CDB		20°CDB		21°CDB		22°CDB		24°CDB		26°CDB	
	(°CDB)	(°CWB)	TC	PI	TC	PI	TC	PI	TC	PI	TC	PI	TC	PI	TC	PI
	-19.3	-20.0	80.6	28.4	80.4	30.1	80.3	31.7	80.2	32.5	80.1	33.4	80.0	35.0	79.8	36.6
	-15.0	-16.0	89.3	31.0	89.1	32.5	88.8	34.1	88.7	34.9	88.5	35.7	88.3	37.2	88.0	38.8
	-12.0	-13.0	96.5	32.8	96.1	34.3	95.8	35.8	95.6	36.6	95.4	37.3	95.0	38.8	94.6	40.4
	-9.0	-10.0	104	34.6	103	36.0	103	37.5	102	38.3	102	39.0	102	40.5	101	41.9
	-7.0	-8.0	109	35.7	108	37.2	108	38.6	108	39.4	107	40.1	107	41.5	106	43.0
	-5.0	-6.0	114	36.9	114	38.3	113	39.7	113	40.5	112	41.2	112	42.6	108	41.9
135	-3.0	-4.0	120	38.0	119	39.4	119	40.9	118	41.6	118	42.3	117	43.4	108	39.9
	-1.0	-2.0	126	39.1	125	40.5	124	42.0	124	42.7	123	43.4	117	41.4	108	38.1
(100%)	0.0	-1.0	129	39.7	128	41.1	127	42.5	126	43.2	125	43.6	117	40.4	108	37.2
	2.0	1.0	134	40.8	133	42.2	133	43.7	130	43.2	126	41.6	117	38.5	108	35.5
	5.0	4.0	143	42.6	142	44.0	135	41.7	130	40.2	126	38.7	117	35.9	108	33.0
	7.0	6.0	149	43.7	144	42.6	135	39.7	130	38.3	126	36.9	117	34.2	108	31.5
	9.0	7.8	153	43.5	144	40.8	135	38.1	130	36.7	126	35.4	117	32.8	108	30.2
	12.0	10.6	153	40.7	144	38.2	135	35.6	130	34.4	126	33.1	117	30.7	108	28.3
	15.0	13.5	153	38.1	144	35.7	135	33.3	130	32.1	126	31.0	117	28.7	107	26.5
	-19.3	-20.0	80.4	30.1	80.3	31.7	80.1	33.3	80.1	34.2	80.0	35.0	79.8	36.6	79.7	38.2
	-15.0	-16.0	89.0	32.7	88.8	34.2	88.5	35.8	88.4	36.6	88.2	37.3	87.9	38.9	87.7	40.4
	-12.0	-13.0	96.1	34.6	95.7	36.1	95.3	37.6	95.1	38.4	95.0	39.1	94.6	40.6	94.2	42.1
	-9.0	-10.0	103	36.4	103	37.9	102	39.4	102	40.1	102	40.9	101	42.3	97.2	41.3
	-7.0	-8.0	108	37.7	108	39.1	107	40.6	107	41.3	107	42.0	105	42.7	97.2	39.4
	-5.0	-6.0	113	38.9	113	40.3	112	41.8	112	42.5	112	43.2	105	40.8	97.2	37.6
121	-3.0	-4.0	119	40.1	118	41.5	117	42.9	117	43.5	113	42.0	105	38.9	97.2	35.9
	-1.0	-2.0	124	41.3	124	42.7	121	43.0	117	41.5	113	40.0	105	37.1	97.2	34.2
(90%)	0.0	-1.0	127	41.9	126	43.3	121	42.0	117	40.5	113	39.1	105	36.2	97.2	33.4
	2.0	1.0	133	43.2	129	42.9	121	40.1	117	38.7	113	37.3	105	34.6	97.2	31.9
	5.0	4.0	137	42.5	129	39.9	121	37.3	117	36.0	113	34.7	105	32.2	97.2	29.7
	7.0	6.0	137	40.6	129	38.0	121	35.6	117	34.3	113	33.1	105	30.7	97.2	28.3
	9.0	7.8	137	38.9	129	36.5	121	34.1	117	32.9	113	31.7	105	29.4	97.2	27.1
	12.0	10.6	137	36.4	129	34.1	121	31.9	117	30.8	113	29.7	105	27.6	97.2	25.4
	15.0	13.5	137	34.0	129	31.9	121	29.8	117	28.8	113	27.8	105	25.8	97.2	23.8
	-19.3	-20.0	80.3	32.1	80.1	33.7	80.0	35.3	79.9	36.2	79.8	37.0	79.6	38.6	79.5	40.2
	-15.0	-16.0	88.7	34.8	88.4	36.4	88.1	37.9	88.0	38.7	87.8	39.4	87.6	41.0	86.4	41.9
	-12.0	-13.0	95.5	36.8	95.2	38.3	94.8	39.8	94.6	40.6	94.4	41.3	93.6	42.5	86.4	39.2
	-9.0	-10.0	102	38.8	102	40.2	101	41.7	101	42.4	100	42.8	93.6	39.7	86.4	36.7
	-7.0	-8.0	107	40.1	107	41.5	106	42.9	104	42.4	100	40.9	93.6	37.9	86.4	35.0
	-5.0	-6.0	112	41.4	112	42.8	108	41.9	104	40.4	100	39.0	93.6	36.2	86.4	33.4
108	-3.0	-4.0	118	42.7	115	42.7	108	39.9	104	38.6	100	37.2	93.6	34.5	86.4	31.9
	-1.0	-2.0	122	43.4	115	40.7	108	38.1	104	36.8	100	35.5	93.6	32.9	86.4	30.4
(80%)	0.0	-1.0	122	42.3	115	39.7	108	37.2	104	35.9	100	34.7	93.6	32.2	86.4	29.7
	2.0	1.0	122	40.4	115	37.9	108	35.5	104	34.2	100	33.1	93.6	30.7	86.4	28.3
	5.0	4.0	122	37.6	115	35.3	108	33.0	104	31.9	100	30.8	93.6	28.6	86.4	26.4
	7.0	6.0	122	35.8	115	33.7	108	31.5	104	30.4	100	29.4	93.6	27.3	86.4	25.2
	9.0	7.8	122	34.3	115	32.3	108	30.2	104	29.2	100	28.2	93.6	26.1	86.4	24.2
	12.0	10.6	122	32.2	115	30.2	108	28.3	104	27.3	100	26.4	93.6	24.5	86.4	22.7
	15.0	13.5	122	30.1	115	28.2	108	26.5	104	25.6	100	24.7	93.6	22.9	86.4	21.2
	-19.3	-20.0	80.0	34.7	79.9	36.3	79.7	37.9	79.6	38.7	79.5	39.5	79.4	41.1	75.6	39.9
	-15.0	-16.0	88.2	37.5	87.9	39.1	87.6	40.6	87.5	41.3	87.3	42.1	81.9	39.7	75.6	36.7
	-12.0	-13.0	94.8	39.6	94.4	41.1	94.0	42.6	91.4	41.5	88.2	40.1	81.9	37.2	75.6	34.4
	-9.0	-10.0	101	41.7	100	42.8	94.5	40.1	91.3	38.8	88.2	37.4	81.9	34.8	75.6	32.1
	-7.0	-8.0	106	43.1	100	40.9	94.5	38.3	91.3	37.0	88.2	35.7	81.9	33.2	75.6	30.7
	-5.0	-6.0	107	41.5	100	39.0	94.5	36.5	91.4	35.3	88.2	34.1	81.9	31.7	75.6	29.3
94.5	-3.0	-4.0	107	39.6	100	37.2	94.5	34.9	91.3	33.7	88.2	32.5	81.9	30.2	75.6	27.9
	-1.0	-2.0	107	37.8	100	35.5	94.5	33.2	91.4	32.1	88.2	31.0	81.9	28.8	75.6	26.7
(70%)	0.0	-1.0	107	36.9	100	34.7	94.5	32.5	91.4	31.4	88.2	30.3	81.9	28.2	75.6	26.0
	2.0	1.0	107	35.2	100	33.1	94.5	31.0	91.3	29.9	88.2	28.9	81.9	26.9	75.6	24.8
	5.0	4.0	107	32.7	100	30.8	94.5	28.8	91.4	27.9	88.2	26.9	81.9	25.0	75.6	23.2
	7.0	6.0	107	31.2	100	29.4	94.5	27.5	91.3	26.6	88.2	25.7	81.9	23.9	75.6	22.1
	9.0	7.8	107	29.9	100	28.2	94.5	26.4	91.3	25.5	88.2	24.7	81.9	22.9	75.6	21.2
	12.0	10.6	107	28.0	100	26.4	94.5	24.7	91.4	23.9	88.2	23.1	81.9	21.5	75.6	19.9
	15.0	13.5	107	26.2	100	24.7	94.5	23.2	91.3	22.4	88.2	21.6	81.9	20.2	75.6	18.7
	-19.3	-20.0	79.7	38.1	79.5	39.7	79.4	41.3	78.3	41.3	75.6	39.9	70.2	37.1	64.8	34.3
	-15.0	-16.0	87.5	41.1	86.4	41.9	81.0	39.3	78.3	38.0	75.6	36.7	70.2	34.2	64.8	31.6
	-12.0	-13.0	91.8	41.7	86.4	39.2	81.0	36.8	78.3	35.6	75.6	34.4	70.2	32.0	64.8	29.6
	-9.0	-10.0	91.8	39.0	86.4	36.7	81.0	34.4	78.3	33.3	75.6	32.1	70.2	29.9	64.8	27.7
	-7.0	-8.0	91.8	37.2	86.4	35.0	81.0	32.8	78.3	31.8	75.6	30.7	70.2	28.5	64.8	26.4
	-5.0	-6.0	91.8	35.5	86.4	33.4	81.0	31.3	78.3	30.3	75.6	29.3	70.2	27.2	64.8	25.2
81.0	-3.0	-4.0	91.8	33.9	86.4	31.9	81.0	29.9	78.3	28.9	75.6	27.9	70.2	26.0	64.8	24.1
	-1.0	-2.0	91.8	32.3	86.4	30.4	81.0	28.5	78.3	27.6	75.6	26.7	70.2	24.8	64.8	23.0
(60%)	0.0	-1.0	91.8	31.5	86.4	29.7	81.0	27.9	78.3	26.9	75.6	26.0	70.2	24.2	64.8	22.5
	2.0	1.0	91.8	30.1	86.4	28.3	81.0	26.6	78.3	25.7	75.6	24.8	70.2	23.1	64.8	21.4
	5.0	4.0	91.8	28.0	86.4	26.4	81.0	24.8	78.3	24.0	75.6	23.2	70.2	21.6	64.8	20.0
	7.0	6.0	91.8	26.7	86.4	25.2	81.0	23.7	78.3	22.9	75.6	22.1	70.2	20.6	64.8	19.1
	9.0	7.8	91.8	25.6	86.4	24.2	81.0	22.7	78.3	22.0	75.6	21.2	70.2	19.8	64.8	18.4
	12.0	10.6	91.8	24.0	86.4	22.7	81.0	21.3	78.3	20.6	75.6	19.9	70.2	18.6	64.8	17.3
	15.0	13.5	91.8	22.5	86.4	21.2	81.0	19.9	78.3	19.3	75.6	18.7	70.2	17.4	64.8	16.2
	-19.3	-20.0	76.5	40.3	72.0	38.0	67.5	35.7	65.2	34.5	63.0	33.4	58.5	31.1	54.0	28.8
	-15.0	-16.0	76.5	37.1	72.0	35.0	67.5	32.9	65.2	31.8	63.0	30.8	58.5	28.6	54.0	26.6
	-12.0	-13.0	76.5	34.8	72.0	32.8	67.5	30.8	65.2	29.8	63.0	28.8	58.5	26.8	54.0	24.9
	-9.0	-10.0	76.5	32.5	72.0	30.6	67.5	28.8	65.2	27.8	63.0	26.9	58.5	25.1	54.0	23.3
	-7.0	-8.0	76.5	31.0	72.0	29.2	67.5	27.5	65.3	26.6	63.0	25.7	58.5	24.0	54.0	22.2
	-5.0	-6.0	76.5	29.6	72.0	27.9	67.5	26.2	65.3	25.4	63.0	24.6	58.5	22.9	54.0	21.2
67.5	-3.0	-4.0	76.5	28.3	72.0	26.6	67.5	25.0	65.3	24.2	63.0	23.4	58.5	21.9	54.0	20.3
	-1.0	-2.0	76.5	27.0	72.0	25.4	67.5	23.9	65.2	23.1	63.0	22.4	58.5	20.9	54.0	19.4
(50%)	0.0	-1.0	76.5	26.3	72.0	24.8	67.5	23.3	65.3	22.6	63.0	21.9	58.5	20.4	54.0	18.9
	2.0	1.0	76.5	25.1	72.0	23.7	67.5	22.3	65.3	21.6	63.0	20.9	58.5	19.5	54.0	18.1
	5.0	4.0	76.5	23.4	72.0	22.1	67.5	20.8	65.2	20.1	63.0	19.5	58.5	18.2	54.0	16.9
	7.0	6.0	76.5	22.4	72.0	21.1	67.5	19.9	65.3	19.2	63.0	18.6	58.5	17.4	54.0	16.2
	9.0	7.8	76.5	21.5	72.0	20.3	67.5	19.1	65.3	18.5	63.0	17.9	58.5	16.7	54.0	15.5
	12.0	10.6	76.5	20.2	72.0	19.0	67.5	17.9	65.3	17.4	63.0	16.8	58.5	15.7	54.0	14.6
	15.0	13.5	76.5	18.9	72.0	17.8	67.5	16.8	65.3	16.3	63.0	15.8	58.5	14.8	54.0	13.8

TC : Total Capacity kW.

PI : Power Input kW (Compressor + Outdoor fan motor).

The data is based on the following conditions. Pipe length : 7.5 m; Height difference : 0 m.

MODEL SELECTION

2-5. CAPACITY COMPENSATION COEFFICIENT

■COMPENSATION COEFFICIENT OF PIPE LENGTH

The figures give the compensation coefficient of pipe length owing to installation position (pipe length, height difference). Pipe length and height difference are the length and the height difference between the master outdoor unit and indoor unit.

● Cooling

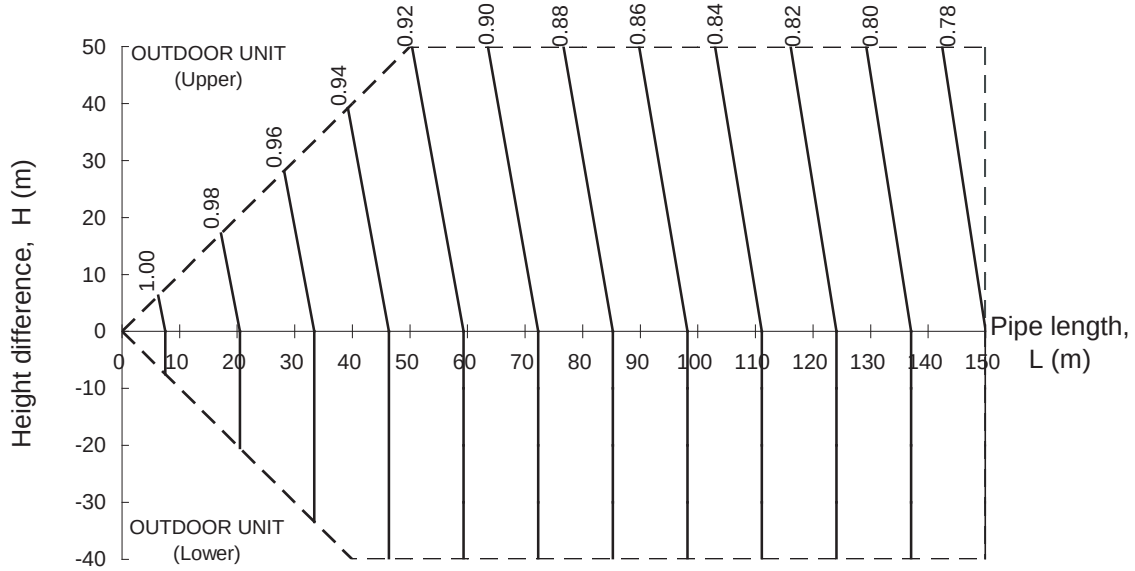

● Heating

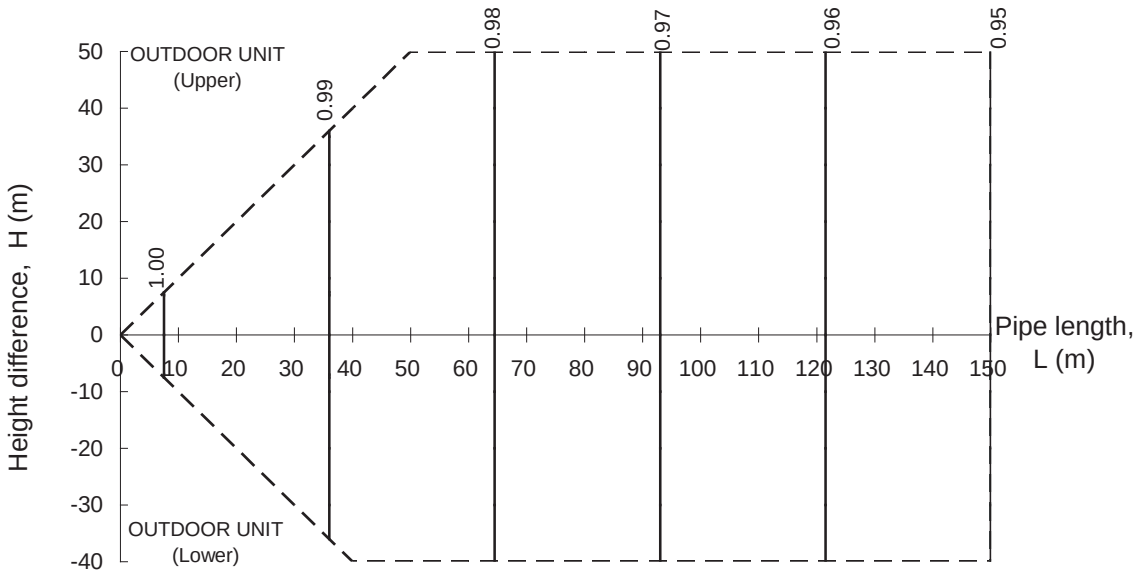

■COMPENSATION COEFFICIENT OF FROSTING / DEFROSTING (HEATING OPERATION)

To take the effects of accumulated frost and defrosting operation on heating capacity into consideration, the capacity of outdoor units should be corrected by compensation coefficient shown in the table below.

Outdoor temperature (^{o}CWB / ^{o}CWB)	-15 / -16	-9 / -10	-3 / -4	0 / -1	2 / 1	5 / 4	7 / 6
Compensation coefficient	0.94	0.92	0.88	0.82	0.82	0.90	1.00

MODEL SELECTION

2-6. CAPACITY TABLE COOLING (INDOOR UNIT)

2-6-1. COMPACT CASSETTE TYPE (1/2)

■ MODEL : AUXB07

Outdoor temperature	Indoor temperature															
	20℃CDB / 15℃CWB		23℃CDB / 16℃CWB		24℃CDB / 17℃CWB		26℃CDB / 18℃CWB		27℃CDB / 19℃CWB		28℃CDB / 20℃CWB		30℃CDB / 22℃CWB		32℃CDB / 23℃CWB	
(℃CDB)	TC	SHC	TC	SHC	TC	SHC	TC	SHC	TC	SHC	TC	SHC	TC	SHC	TC	SHC
10	1.57	1.27	1.73	1.55	1.89	1.59	2.04	1.75	2.20	1.77	2.36	1.80	2.67	1.84	2.83	1.98
15	1.57	1.27	1.73	1.55	1.89	1.59	2.04	1.75	2.20	1.77	2.36	1.80	2.67	1.84	2.83	1.98
21	1.57	1.27	1.73	1.55	1.89	1.59	2.04	1.75	2.20	1.77	2.36	1.80	2.67	1.84	2.83	1.98
23	1.57	1.27	1.73	1.55	1.89	1.59	2.04	1.75	2.20	1.77	2.36	1.80	2.67	1.84	2.83	1.98
25	1.57	1.27	1.73	1.55	1.89	1.59	2.04	1.75	2.20	1.77	2.36	1.80	2.67	1.84	2.81	1.97
27	1.57	1.27	1.73	1.55	1.89	1.59	2.04	1.75	2.20	1.77	2.36	1.80	2.67	1.84	2.76	1.95
30	1.57	1.27	1.73	1.55	1.89	1.59	2.04	1.75	2.20	1.77	2.36	1.80	2.63	1.83	2.68	1.92
33	1.57	1.27	1.73	1.55	1.89	1.59	2.04	1.75	2.20	1.77	2.36	1.80	2.55	1.80	2.60	1.90
35	1.57	1.27	1.73	1.55	1.89	1.59	2.04	1.75	2.20	1.77	2.36	1.80	2.50	1.78	2.55	1.88
37	1.57	1.27	1.73	1.55	1.89	1.59	2.04	1.75	2.20	1.77	2.35	1.80	2.44	1.76	2.49	1.86
40	1.57	1.27	1.73	1.55	1.89	1.59	2.04	1.75	2.20	1.77	2.26	1.76	2.36	1.73	2.40	1.83
43	1.57	1.27	1.73	1.55	1.89	1.59	2.04	1.75	2.14	1.75	2.18	1.73	2.27	1.70	2.32	1.80

■ MODEL : AUXB09

Outdoor temperature	Indoor temperature															
	20℃CDB / 15℃CWB		23℃CDB / 16℃CWB		24℃CDB / 17℃CWB		26℃CDB / 18℃CWB		27℃CDB / 19℃CWB		28℃CDB / 20℃CWB		30℃CDB / 22℃CWB		32℃CDB / 23℃CWB	
(℃CDB)	TC	SHC	TC	SHC	TC	SHC	TC	SHC	TC	SHC	TC	SHC	TC	SHC	TC	SHC
10	2.00	1.46	2.20	1.76	2.40	1.81	2.60	1.98	2.80	2.02	3.00	2.06	3.40	2.12	3.60	2.26
15	2.00	1.46	2.20	1.76	2.40	1.81	2.60	1.98	2.80	2.02	3.00	2.06	3.40	2.12	3.60	2.26
21	2.00	1.46	2.20	1.76	2.40	1.81	2.60	1.98	2.80	2.02	3.00	2.06	3.40	2.12	3.60	2.26
23	2.00	1.46	2.20	1.76	2.40	1.81	2.60	1.98	2.80	2.02	3.00	2.06	3.40	2.12	3.60	2.26
25	2.00	1.46	2.20	1.76	2.40	1.81	2.60	1.98	2.80	2.02	3.00	2.06	3.40	2.12	3.57	2.25
27	2.00	1.46	2.20	1.76	2.40	1.81	2.60	1.98	2.80	2.02	3.00	2.06	3.40	2.12	3.51	2.23
30	2.00	1.46	2.20	1.76	2.40	1.81	2.60	1.98	2.80	2.02	3.00	2.06	3.35	2.10	3.41	2.19
33	2.00	1.46	2.20	1.76	2.40	1.81	2.60	1.98	2.80	2.02	3.00	2.06	3.25	2.06	3.31	2.15
35	2.00	1.46	2.20	1.76	2.40	1.81	2.60	1.98	2.80	2.02	3.00	2.06	3.18	2.03	3.24	2.13
37	2.00	1.46	2.20	1.76	2.40	1.81	2.60	1.98	2.80	2.02	2.99	2.06	3.11	2.01	3.17	2.10
40	2.00	1.46	2.20	1.76	2.40	1.81	2.60	1.98	2.80	2.02	2.88	2.01	3.00	1.96	3.06	2.06
43	2.00	1.46	2.20	1.76	2.40	1.81	2.60	1.98	2.72	1.99	2.77	1.96	2.89	1.92	2.95	2.02

■ MODEL : AUXB12

Outdoor temperature	Indoor temperature															
	20℃CDB / 15℃CWB		23℃CDB / 16℃CWB		24℃CDB / 17℃CWB		26℃CDB / 18℃CWB		27℃CDB / 19℃CWB		28℃CDB / 20℃CWB		30℃CDB / 22℃CWB		32℃CDB / 23℃CWB	
(℃CDB)	TC	SHC	TC	SHC	TC	SHC	TC	SHC	TC	SHC	TC	SHC	TC	SHC	TC	SHC
10	2.57	1.90	2.83	2.30	3.09	2.36	3.34	2.58	3.60	2.64	3.86	2.68	4.37	2.76	4.63	2.94
15	2.57	1.90	2.83	2.30	3.09	2.36	3.34	2.58	3.60	2.64	3.86	2.68	4.37	2.76	4.63	2.94
21	2.57	1.90	2.83	2.30	3.09	2.36	3.34	2.58	3.60	2.64	3.86	2.68	4.37	2.76	4.63	2.94
23	2.57	1.90	2.83	2.30	3.09	2.36	3.34	2.58	3.60	2.64	3.86	2.68	4.37	2.76	4.63	2.94
25	2.57	1.90	2.83	2.30	3.09	2.36	3.34	2.58	3.60	2.64	3.86	2.68	4.37	2.76	4.59	2.93
27	2.57	1.90	2.83	2.30	3.09	2.36	3.34	2.58	3.60	2.64	3.86	2.68	4.37	2.76	4.51	2.90
30	2.57	1.90	2.83	2.30	3.09	2.36	3.34	2.58	3.60	2.64	3.86	2.68	4.31	2.73	4.38	2.85
33	2.57	1.90	2.83	2.30	3.09	2.36	3.34	2.58	3.60	2.64	3.86	2.68	4.18	2.68	4.26	2.80
35	2.57	1.90	2.83	2.30	3.09	2.36	3.34	2.58	3.60	2.64	3.86	2.68	4.09	2.65	4.17	2.77
37	2.57	1.90	2.83	2.30	3.09	2.36	3.34	2.58	3.60	2.64	3.84	2.68	4.00	2.61	4.08	2.74
40	2.57	1.90	2.83	2.30	3.09	2.36	3.34	2.58	3.60	2.64	3.70	2.62	3.86	2.56	3.93	2.69
43	2.57	1.90	2.83	2.30	3.09	2.36	3.34	2.58	3.50	2.59	3.56	2.56	3.72	2.51	3.79	2.64

TC : Total Capacity kW.

SHC : Sensible Heat Capacity kW.

MODEL SELECTION

2-6-1. COMPACT CASSETTE TYPE (2/2)

■ MODEL : AUXB14

Outdoor temperature	Indoor temperature															
	20℃CDB / 15℃CWB		23℃CDB / 16℃CWB		24℃CDB / 17℃CWB		26℃CDB / 18℃CWB		27℃CDB / 19℃CWB		28℃CDB / 20℃CWB		30℃CDB / 22℃CWB		32℃CDB / 23℃CWB	
(℃CDB)	TC	SHC	TC	SHC	TC	SHC	TC	SHC	TC	SHC	TC	SHC	TC	SHC	TC	SHC
10	2.86	2.03	3.14	2.44	3.43	2.52	3.71	2.75	4.00	2.81	4.29	2.86	4.86	2.95	5.14	3.15
15	2.86	2.03	3.14	2.44	3.43	2.52	3.71	2.75	4.00	2.81	4.29	2.86	4.86	2.95	5.14	3.15
21	2.86	2.03	3.14	2.44	3.43	2.52	3.71	2.75	4.00	2.81	4.29	2.86	4.86	2.95	5.14	3.15
23	2.86	2.03	3.14	2.44	3.43	2.52	3.71	2.75	4.00	2.81	4.29	2.86	4.86	2.95	5.14	3.15
25	2.86	2.03	3.14	2.44	3.43	2.52	3.71	2.75	4.00	2.81	4.29	2.86	4.86	2.95	5.10	3.13
27	2.86	2.03	3.14	2.44	3.43	2.52	3.71	2.75	4.00	2.81	4.29	2.86	4.86	2.95	5.01	3.09
30	2.86	2.03	3.14	2.44	3.43	2.52	3.71	2.75	4.00	2.81	4.29	2.86	4.79	2.92	4.87	3.04
33	2.86	2.03	3.14	2.44	3.43	2.52	3.71	2.75	4.00	2.81	4.29	2.86	4.64	2.86	4.73	2.98
35	2.86	2.03	3.14	2.44	3.43	2.52	3.71	2.75	4.00	2.81	4.29	2.86	4.54	2.82	4.63	2.94
37	2.86	2.03	3.14	2.44	3.43	2.52	3.71	2.75	4.00	2.81	4.27	2.86	4.44	2.78	4.53	2.91
40	2.86	2.03	3.14	2.44	3.43	2.52	3.71	2.75	4.00	2.81	4.11	2.79	4.29	2.72	4.37	2.85
43	2.86	2.03	3.14	2.44	3.43	2.52	3.71	2.75	3.89	2.76	3.96	2.72	4.13	2.66	4.21	2.79

■ MODEL : AUXB18

Outdoor temperature	Indoor temperature															
	20℃CDB / 15℃CWB		23℃CDB / 16℃CWB		24℃CDB / 17℃CWB		26℃CDB / 18℃CWB		27℃CDB / 19℃CWB		28℃CDB / 20℃CWB		30℃CDB / 22℃CWB		32℃CDB / 23℃CWB	
(℃CDB)	TC	SHC	TC	SHC	TC	SHC	TC	SHC	TC	SHC	TC	SHC	TC	SHC	TC	SHC
10	3.57	2.51	3.93	3.01	4.29	3.10	4.64	3.39	5.00	3.46	5.36	3.53	6.07	3.65	6.43	3.88
15	3.57	2.51	3.93	3.01	4.29	3.10	4.64	3.39	5.00	3.46	5.36	3.53	6.07	3.65	6.43	3.88
21	3.57	2.51	3.93	3.01	4.29	3.10	4.64	3.39	5.00	3.46	5.36	3.53	6.07	3.65	6.43	3.88
23	3.57	2.51	3.93	3.01	4.29	3.10	4.64	3.39	5.00	3.46	5.36	3.53	6.07	3.65	6.43	3.88
25	3.57	2.51	3.93	3.01	4.29	3.10	4.64	3.39	5.00	3.46	5.36	3.53	6.07	3.65	6.38	3.86
27	3.57	2.51	3.93	3.01	4.29	3.10	4.64	3.39	5.00	3.46	5.36	3.53	6.07	3.65	6.27	3.82
30	3.57	2.51	3.93	3.01	4.29	3.10	4.64	3.39	5.00	3.46	5.36	3.53	5.98	3.61	6.09	3.75
33	3.57	2.51	3.93	3.01	4.29	3.10	4.64	3.39	5.00	3.46	5.36	3.53	5.80	3.54	5.91	3.68
35	3.57	2.51	3.93	3.01	4.29	3.10	4.64	3.39	5.00	3.46	5.36	3.53	5.68	3.48	5.79	3.63
37	3.57	2.51	3.93	3.01	4.29	3.10	4.64	3.39	5.00	3.46	5.34	3.52	5.55	3.43	5.66	3.58
40	3.57	2.51	3.93	3.01	4.29	3.10	4.64	3.39	5.00	3.46	5.14	3.44	5.36	3.36	5.46	3.51
43	3.57	2.51	3.93	3.01	4.29	3.10	4.64	3.39	4.86	3.40	4.95	3.36	5.16	3.28	5.27	3.43

TC : Total Capacity kW.

SHC : Sensible Heat Capacity kW.

MODEL SELECTION

2-6-2. CASSETTE TYPE (1/2)

■ MODEL : AU *A20

Outdoor temperature	Indoor temperature															
	20℃CDB / 15℃CWB		23℃CDB / 16℃CWB		24℃CDB / 17℃CWB		26℃CDB / 18℃CWB		27℃CDB / 19℃CWB		28℃CDB / 20℃CWB		30℃CDB / 22℃CWB		32℃CDB / 23℃CWB	
(℃CDB)	TC	SHC	TC	SHC	TC	SHC	TC	SHC	TC	SHC	TC	SHC	TC	SHC	TC	SHC
10	4.07	3.11	4.48	3.78	4.89	3.88	5.29	4.25	5.70	4.33	6.11	4.40	6.92	4.51	7.33	4.83
15	4.07	3.11	4.48	3.78	4.89	3.88	5.29	4.25	5.70	4.33	6.11	4.40	6.92	4.51	7.33	4.83
21	4.07	3.11	4.48	3.78	4.89	3.88	5.29	4.25	5.70	4.33	6.11	4.40	6.92	4.51	7.33	4.83
23	4.07	3.11	4.48	3.78	4.89	3.88	5.29	4.25	5.70	4.33	6.11	4.40	6.92	4.51	7.33	4.83
25	4.07	3.11	4.48	3.78	4.89	3.88	5.29	4.25	5.70	4.33	6.11	4.40	6.92	4.51	7.27	4.81
27	4.07	3.11	4.48	3.78	4.89	3.88	5.29	4.25	5.70	4.33	6.11	4.40	6.92	4.51	7.15	4.76
30	4.07	3.11	4.48	3.78	4.89	3.88	5.29	4.25	5.70	4.33	6.11	4.40	6.82	4.48	6.94	4.69
33	4.07	3.11	4.48	3.78	4.89	3.88	5.29	4.25	5.70	4.33	6.11	4.40	6.62	4.40	6.74	4.62
35	4.07	3.11	4.48	3.78	4.89	3.88	5.29	4.25	5.70	4.33	6.11	4.40	6.47	4.34	6.60	4.57
37	4.07	3.11	4.48	3.78	4.89	3.88	5.29	4.25	5.70	4.33	6.09	4.39	6.33	4.29	6.45	4.52
40	4.07	3.11	4.48	3.78	4.89	3.88	5.29	4.25	5.70	4.33	5.86	4.30	6.11	4.21	6.23	4.44
43	4.07	3.11	4.48	3.78	4.89	3.88	5.29	4.25	5.54	4.27	5.64	4.22	5.88	4.13	6.01	4.36

■ MODEL : AU *A25

Outdoor temperature	Indoor temperature															
	20℃CDB / 15℃CWB		23℃CDB / 16℃CWB		24℃CDB / 17℃CWB		26℃CDB / 18℃CWB		27℃CDB / 19℃CWB		28℃CDB / 20℃CWB		30℃CDB / 22℃CWB		32℃CDB / 23℃CWB	
(℃CDB)	TC	SHC	TC	SHC	TC	SHC	TC	SHC	TC	SHC	TC	SHC	TC	SHC	TC	SHC
10	5.04	3.75	5.54	4.55	6.04	4.68	6.55	5.11	7.05	5.22	7.55	5.30	8.56	5.45	9.06	5.82
15	5.04	3.75	5.54	4.55	6.04	4.68	6.55	5.11	7.05	5.22	7.55	5.30	8.56	5.45	9.06	5.82
21	5.04	3.75	5.54	4.55	6.04	4.68	6.55	5.11	7.05	5.22	7.55	5.30	8.56	5.45	9.06	5.82
23	5.04	3.75	5.54	4.55	6.04	4.68	6.55	5.11	7.05	5.22	7.55	5.30	8.56	5.45	9.06	5.82
25	5.04	3.75	5.54	4.55	6.04	4.68	6.55	5.11	7.05	5.22	7.55	5.30	8.56	5.45	8.99	5.80
27	5.04	3.75	5.54	4.55	6.04	4.68	6.55	5.11	7.05	5.22	7.55	5.30	8.56	5.45	8.84	5.74
30	5.04	3.75	5.54	4.55	6.04	4.68	6.55	5.11	7.05	5.22	7.55	5.30	8.43	5.40	8.59	5.64
33	5.04	3.75	5.54	4.55	6.04	4.68	6.55	5.11	7.05	5.22	7.55	5.30	8.18	5.30	8.33	5.55
35	5.04	3.75	5.54	4.55	6.04	4.68	6.55	5.11	7.05	5.22	7.55	5.30	8.01	5.23	8.16	5.49
37	5.04	3.75	5.54	4.55	6.04	4.68	6.55	5.11	7.05	5.22	7.53	5.29	7.83	5.17	7.98	5.42
40	5.04	3.75	5.54	4.55	6.04	4.68	6.55	5.11	7.05	5.22	7.25	5.18	7.55	5.07	7.70	5.32
43	5.04	3.75	5.54	4.55	6.04	4.68	6.55	5.11	6.85	5.13	6.97	5.07	7.28	4.96	7.43	5.23

■ MODEL : AU *A30

Outdoor temperature	Indoor temperature															
	20℃CDB / 15℃CWB		23℃CDB / 16℃CWB		24℃CDB / 17℃CWB		26℃CDB / 18℃CWB		27℃CDB / 19℃CWB		28℃CDB / 20℃CWB		30℃CDB / 22℃CWB		32℃CDB / 23℃CWB	
(℃CDB)	TC	SHC	TC	SHC	TC	SHC	TC	SHC	TC	SHC	TC	SHC	TC	SHC	TC	SHC
10	6.29	4.52	6.91	5.45	7.54	5.61	8.17	6.13	8.80	6.26	9.43	6.38	10.7	6.57	11.3	7.01
15	6.29	4.52	6.91	5.45	7.54	5.61	8.17	6.13	8.80	6.26	9.43	6.38	10.7	6.57	11.3	7.01
21	6.29	4.52	6.91	5.45	7.54	5.61	8.17	6.13	8.80	6.26	9.43	6.38	10.7	6.57	11.3	7.01
23	6.29	4.52	6.91	5.45	7.54	5.61	8.17	6.13	8.80	6.26	9.43	6.38	10.7	6.57	11.3	7.01
25	6.29	4.52	6.91	5.45	7.54	5.61	8.17	6.13	8.80	6.26	9.43	6.38	10.7	6.57	11.2	6.97
27	6.29	4.52	6.91	5.45	7.54	5.61	8.17	6.13	8.80	6.26	9.43	6.38	10.7	6.57	11.0	6.90
30	6.29	4.52	6.91	5.45	7.54	5.61	8.17	6.13	8.80	6.26	9.43	6.38	10.5	6.51	10.7	6.78
33	6.29	4.52	6.91	5.45	7.54	5.61	8.17	6.13	8.80	6.26	9.43	6.38	10.2	6.38	10.4	6.66
35	6.29	4.52	6.91	5.45	7.54	5.61	8.17	6.13	8.80	6.26	9.43	6.38	9.99	6.29	10.2	6.57
37	6.29	4.52	6.91	5.45	7.54	5.61	8.17	6.13	8.80	6.26	9.40	6.37	9.77	6.21	9.96	6.49
40	6.29	4.52	6.91	5.45	7.54	5.61	8.17	6.13	8.80	6.26	9.05	6.22	9.43	6.08	9.62	6.36
43	6.29	4.52	6.91	5.45	7.54	5.61	8.17	6.13	8.55	6.16	8.71	6.08	9.08	5.94	9.27	6.24

TC : Total Capacity kW.

SHC : Sensible Heat Capacity kW.

MODEL SELECTION

2-6-2. CASSETTE TYPE (2/2)

■ MODEL : AU *A36

Outdoor temperature	Indoor temperature															
	20°CDB / 15°CWB		23°CDB / 16°CWB		24°CDB / 17°CWB		26°CDB / 18°CWB		27°CDB / 19°CWB		28°CDB / 20°CWB		30°CDB / 22°CWB		32°CDB / 23°CWB	
(°CDB)	TC	SHC	TC	SHC	TC	SHC	TC	SHC	TC	SHC	TC	SHC	TC	SHC	TC	SHC
10	7.50	5.40	8.25	6.52	9.00	6.71	9.75	7.33	10.5	7.49	11.3	7.63	12.8	7.85	13.5	8.38
15	7.50	5.40	8.25	6.52	9.00	6.71	9.75	7.33	10.5	7.49	11.3	7.63	12.8	7.85	13.5	8.38
21	7.50	5.40	8.25	6.52	9.00	6.71	9.75	7.33	10.5	7.49	11.3	7.63	12.8	7.85	13.5	8.38
23	7.50	5.40	8.25	6.52	9.00	6.71	9.75	7.33	10.5	7.49	11.3	7.63	12.8	7.85	13.5	8.38
25	7.50	5.40	8.25	6.52	9.00	6.71	9.75	7.33	10.5	7.49	11.3	7.63	12.8	7.85	13.4	8.34
27	7.50	5.40	8.25	6.52	9.00	6.71	9.75	7.33	10.5	7.49	11.3	7.63	12.8	7.85	13.2	8.25
30	7.50	5.40	8.25	6.52	9.00	6.71	9.75	7.33	10.5	7.49	11.3	7.63	12.6	7.78	12.8	8.10
33	7.50	5.40	8.25	6.52	9.00	6.71	9.75	7.33	10.5	7.49	11.3	7.63	12.2	7.63	12.4	7.96
35	7.50	5.40	8.25	6.52	9.00	6.71	9.75	7.33	10.5	7.49	11.3	7.63	11.9	7.53	12.2	7.86
37	7.50	5.40	8.25	6.52	9.00	6.71	9.75	7.33	10.5	7.49	11.2	7.61	11.7	7.42	11.9	7.76
40	7.50	5.40	8.25	6.52	9.00	6.71	9.75	7.33	10.5	7.49	10.8	7.44	11.3	7.27	11.5	7.61
43	7.50	5.40	8.25	6.52	9.00	6.71	9.75	7.33	10.2	7.36	10.4	7.27	10.8	7.11	11.1	7.46

■ MODEL : AU *A45

Outdoor temperature	Indoor temperature															
	20°CDB / 15°CWB		23°CDB / 16°CWB		24°CDB / 17°CWB		26°CDB / 18°CWB		27°CDB / 19°CWB		28°CDB / 20°CWB		30°CDB / 22°CWB		32°CDB / 23°CWB	
(°CDB)	TC	SHC	TC	SHC	TC	SHC	TC	SHC	TC	SHC	TC	SHC	TC	SHC	TC	SHC
10	9.07	6.21	9.98	7.42	10.9	7.67	11.8	8.35	12.7	8.56	13.6	8.75	15.4	9.05	16.3	9.63
15	9.07	6.21	9.98	7.42	10.9	7.67	11.8	8.35	12.7	8.56	13.6	8.75	15.4	9.05	16.3	9.63
21	9.07	6.21	9.98	7.42	10.9	7.67	11.8	8.35	12.7	8.56	13.6	8.75	15.4	9.05	16.3	9.63
23	9.07	6.21	9.98	7.42	10.9	7.67	11.8	8.35	12.7	8.56	13.6	8.75	15.4	9.05	16.3	9.63
25	9.07	6.21	9.98	7.42	10.9	7.67	11.8	8.35	12.7	8.56	13.6	8.75	15.4	9.05	16.2	9.57
27	9.07	6.21	9.98	7.42	10.9	7.67	11.8	8.35	12.7	8.56	13.6	8.75	15.4	9.05	15.9	9.46
30	9.07	6.21	9.98	7.42	10.9	7.67	11.8	8.35	12.7	8.56	13.6	8.75	15.2	8.96	15.5	9.27
33	9.07	6.21	9.98	7.42	10.9	7.67	11.8	8.35	12.7	8.56	13.6	8.75	14.7	8.76	15.0	9.08
35	9.07	6.21	9.98	7.42	10.9	7.67	11.8	8.35	12.7	8.56	13.6	8.75	14.4	8.63	14.7	8.96
37	9.07	6.21	9.98	7.42	10.9	7.67	11.8	8.35	12.7	8.56	13.6	8.73	14.1	8.50	14.4	8.83
40	9.07	6.21	9.98	7.42	10.9	7.67	11.8	8.35	12.7	8.56	13.1	8.50	13.6	8.29	13.9	8.63
43	9.07	6.21	9.98	7.42	10.9	7.67	11.8	8.35	12.3	8.40	12.6	8.28	13.1	8.09	13.4	8.44

■ MODEL : AU *A54

Outdoor temperature	Indoor temperature															
	20°CDB / 15°CWB		23°CDB / 16°CWB		24°CDB / 17°CWB		26°CDB / 18°CWB		27°CDB / 19°CWB		28°CDB / 20°CWB		30°CDB / 22°CWB		32°CDB / 23°CWB	
(°CDB)	TC	SHC	TC	SHC	TC	SHC	TC	SHC	TC	SHC	TC	SHC	TC	SHC	TC	SHC
10	10.1	6.87	11.1	8.20	12.1	8.48	13.1	9.24	14.1	9.47	15.1	9.68	17.1	10.0	18.1	10.7
15	10.1	6.87	11.1	8.20	12.1	8.48	13.1	9.24	14.1	9.47	15.1	9.68	17.1	10.0	18.1	10.7
21	10.1	6.87	11.1	8.20	12.1	8.48	13.1	9.24	14.1	9.47	15.1	9.68	17.1	10.0	18.1	10.7
23	10.1	6.87	11.1	8.20	12.1	8.48	13.1	9.24	14.1	9.47	15.1	9.68	17.1	10.0	18.1	10.7
25	10.1	6.87	11.1	8.20	12.1	8.48	13.1	9.24	14.1	9.47	15.1	9.68	17.1	10.0	18.0	10.6
27	10.1	6.87	11.1	8.20	12.1	8.48	13.1	9.24	14.1	9.47	15.1	9.68	17.1	10.0	17.7	10.5
30	10.1	6.87	11.1	8.20	12.1	8.48	13.1	9.24	14.1	9.47	15.1	9.68	16.9	9.91	17.2	10.3
33	10.1	6.87	11.1	8.20	12.1	8.48	13.1	9.24	14.1	9.47	15.1	9.68	16.4	9.69	16.7	10.0
35	10.1	6.87	11.1	8.20	12.1	8.48	13.1	9.24	14.1	9.47	15.1	9.68	16.0	9.54	16.3	9.90
37	10.1	6.87	11.1	8.20	12.1	8.48	13.1	9.24	14.1	9.47	15.1	9.65	15.7	9.40	16.0	9.76
40	10.1	6.87	11.1	8.20	12.1	8.48	13.1	9.24	14.1	9.47	14.5	9.40	15.1	9.17	15.4	9.54
43	10.1	6.87	11.1	8.20	12.1	8.48	13.1	9.24	13.7	9.29	13.9	9.16	14.6	8.94	14.9	9.32

TC : Total Capacity kW.

SHC : Sensible Heat Capacity kW.

MODEL SELECTION

2-6-3. COMPACT DUCT TYPE (1/2)

■ MODEL : ARXB07

Outdoor temperature	Indoor temperature															
	20℃CDB / 15℃CWB		23℃CDB / 16℃CWB		24℃CDB / 17℃CWB		26℃CDB / 18℃CWB		27℃CDB / 19℃CWB		28℃CDB / 20℃CWB		30℃CDB / 22℃CWB		32℃CDB / 23℃CWB	
(℃CDB)	TC	SHC	TC	SHC	TC	SHC	TC	SHC	TC	SHC	TC	SHC	TC	SHC	TC	SHC
10	1.57	1.08	1.73	1.30	1.89	1.34	2.04	1.46	2.20	1.50	2.36	1.53	2.67	1.58	2.83	1.68
15	1.57	1.08	1.73	1.30	1.89	1.34	2.04	1.46	2.20	1.50	2.36	1.53	2.67	1.58	2.83	1.68
21	1.57	1.08	1.73	1.30	1.89	1.34	2.04	1.46	2.20	1.50	2.36	1.53	2.67	1.58	2.83	1.68
23	1.57	1.08	1.73	1.30	1.89	1.34	2.04	1.46	2.20	1.50	2.36	1.53	2.67	1.58	2.83	1.68
25	1.57	1.08	1.73	1.30	1.89	1.34	2.04	1.46	2.20	1.50	2.36	1.53	2.67	1.58	2.81	1.67
27	1.57	1.08	1.73	1.30	1.89	1.34	2.04	1.46	2.20	1.50	2.36	1.53	2.67	1.58	2.76	1.65
30	1.57	1.08	1.73	1.30	1.89	1.34	2.04	1.46	2.20	1.50	2.36	1.53	2.63	1.56	2.68	1.62
33	1.57	1.08	1.73	1.30	1.89	1.34	2.04	1.46	2.20	1.50	2.36	1.53	2.55	1.53	2.60	1.59
35	1.57	1.08	1.73	1.30	1.89	1.34	2.04	1.46	2.20	1.50	2.36	1.53	2.50	1.51	2.55	1.57
37	1.57	1.08	1.73	1.30	1.89	1.34	2.04	1.46	2.20	1.50	2.35	1.52	2.44	1.48	2.49	1.54
40	1.57	1.08	1.73	1.30	1.89	1.34	2.04	1.46	2.20	1.50	2.26	1.49	2.36	1.45	2.40	1.51
43	1.57	1.08	1.73	1.30	1.89	1.34	2.04	1.46	2.14	1.47	2.18	1.45	2.27	1.41	2.32	1.48

■ MODEL : ARXB09

Outdoor temperature	Indoor temperature															
	20℃CDB / 15℃CWB		23℃CDB / 16℃CWB		24℃CDB / 17℃CWB		26℃CDB / 18℃CWB		27℃CDB / 19℃CWB		28℃CDB / 20℃CWB		30℃CDB / 22℃CWB		32℃CDB / 23℃CWB	
(℃CDB)	TC	SHC	TC	SHC	TC	SHC	TC	SHC	TC	SHC	TC	SHC	TC	SHC	TC	SHC
10	2.00	1.36	2.20	1.61	2.40	1.67	2.60	1.82	2.80	1.87	3.00	1.91	3.40	1.98	3.60	2.10
15	2.00	1.36	2.20	1.61	2.40	1.67	2.60	1.82	2.80	1.87	3.00	1.91	3.40	1.98	3.60	2.10
21	2.00	1.36	2.20	1.61	2.40	1.67	2.60	1.82	2.80	1.87	3.00	1.91	3.40	1.98	3.60	2.10
23	2.00	1.36	2.20	1.61	2.40	1.67	2.60	1.82	2.80	1.87	3.00	1.91	3.40	1.98	3.60	2.10
25	2.00	1.36	2.20	1.61	2.40	1.67	2.60	1.82	2.80	1.87	3.00	1.91	3.40	1.98	3.57	2.09
27	2.00	1.36	2.20	1.61	2.40	1.67	2.60	1.82	2.80	1.87	3.00	1.91	3.40	1.98	3.51	2.06
30	2.00	1.36	2.20	1.61	2.40	1.67	2.60	1.82	2.80	1.87	3.00	1.91	3.35	1.96	3.41	2.02
33	2.00	1.36	2.20	1.61	2.40	1.67	2.60	1.82	2.80	1.87	3.00	1.91	3.25	1.91	3.31	1.98
35	2.00	1.36	2.20	1.61	2.40	1.67	2.60	1.82	2.80	1.87	3.00	1.91	3.18	1.88	3.24	1.95
37	2.00	1.36	2.20	1.61	2.40	1.67	2.60	1.82	2.80	1.87	2.99	1.90	3.11	1.85	3.17	1.92
40	2.00	1.36	2.20	1.61	2.40	1.67	2.60	1.82	2.80	1.87	2.88	1.85	3.00	1.81	3.06	1.88
43	2.00	1.36	2.20	1.61	2.40	1.67	2.60	1.82	2.72	1.83	2.77	1.80	2.89	1.76	2.95	1.83

■ MODEL : ARXB12

Outdoor temperature	Indoor temperature															
	20℃CDB / 15℃CWB		23℃CDB / 16℃CWB		24℃CDB / 17℃CWB		26℃CDB / 18℃CWB		27℃CDB / 19℃CWB		28℃CDB / 20℃CWB		30℃CDB / 22℃CWB		32℃CDB / 23℃CWB	
(℃CDB)	TC	SHC	TC	SHC	TC	SHC	TC	SHC	TC	SHC	TC	SHC	TC	SHC	TC	SHC
10	2.57	1.87	2.83	2.26	3.09	2.33	3.34	2.54	3.60	2.60	3.86	2.64	4.37	2.72	4.63	2.90
15	2.57	1.87	2.83	2.26	3.09	2.33	3.34	2.54	3.60	2.60	3.86	2.64	4.37	2.72	4.63	2.90
21	2.57	1.87	2.83	2.26	3.09	2.33	3.34	2.54	3.60	2.60	3.86	2.64	4.37	2.72	4.63	2.90
23	2.57	1.87	2.83	2.26	3.09	2.33	3.34	2.54	3.60	2.60	3.86	2.64	4.37	2.72	4.63	2.90
25	2.57	1.87	2.83	2.26	3.09	2.33	3.34	2.54	3.60	2.60	3.86	2.64	4.37	2.72	4.59	2.89
27	2.57	1.87	2.83	2.26	3.09	2.33	3.34	2.54	3.60	2.60	3.86	2.64	4.37	2.72	4.51	2.86
30	2.57	1.87	2.83	2.26	3.09	2.33	3.34	2.54	3.60	2.60	3.86	2.64	4.31	2.70	4.38	2.81
33	2.57	1.87	2.83	2.26	3.09	2.33	3.34	2.54	3.60	2.60	3.86	2.64	4.18	2.64	4.26	2.76
35	2.57	1.87	2.83	2.26	3.09	2.33	3.34	2.54	3.60	2.60	3.86	2.64	4.09	2.61	4.17	2.73
37	2.57	1.87	2.83	2.26	3.09	2.33	3.34	2.54	3.60	2.60	3.84	2.64	4.00	2.57	4.08	2.70
40	2.57	1.87	2.83	2.26	3.09	2.33	3.34	2.54	3.60	2.60	3.70	2.58	3.86	2.52	3.93	2.64
43	2.57	1.87	2.83	2.26	3.09	2.33	3.34	2.54	3.50	2.55	3.56	2.52	3.72	2.47	3.79	2.59

TC : Total Capacity kW.

SHC : Sensible Heat Capacity kW.

2-6-3. COMPACT DUCT TYPE (2/2)

■ MODEL : ARXB14

Outdoor temperature	Indoor temperature															
	20℃CDB / 15℃CWB		23℃CDB / 16℃CWB		24℃CDB / 17℃CWB		26℃CDB / 18℃CWB		27℃CDB / 19℃CWB		28℃CDB / 20℃CWB		30℃CDB / 22℃CWB		32℃CDB / 23℃CWB	
(℃CDB)	TC	SHC	TC	SHC	TC	SHC	TC	SHC	TC	SHC	TC	SHC	TC	SHC	TC	SHC
10	2.86	2.07	3.14	2.49	3.43	2.57	3.71	2.80	4.00	2.86	4.29	2.92	4.86	3.00	5.14	3.20
15	2.86	2.07	3.14	2.49	3.43	2.57	3.71	2.80	4.00	2.86	4.29	2.92	4.86	3.00	5.14	3.20
21	2.86	2.07	3.14	2.49	3.43	2.57	3.71	2.80	4.00	2.86	4.29	2.92	4.86	3.00	5.14	3.20
23	2.86	2.07	3.14	2.49	3.43	2.57	3.71	2.80	4.00	2.86	4.29	2.92	4.86	3.00	5.14	3.20
25	2.86	2.07	3.14	2.49	3.43	2.57	3.71	2.80	4.00	2.86	4.29	2.92	4.86	3.00	5.10	3.19
27	2.86	2.07	3.14	2.49	3.43	2.57	3.71	2.80	4.00	2.86	4.29	2.92	4.86	3.00	5.01	3.15
30	2.86	2.07	3.14	2.49	3.43	2.57	3.71	2.80	4.00	2.86	4.29	2.92	4.79	2.97	4.87	3.10
33	2.86	2.07	3.14	2.49	3.43	2.57	3.71	2.80	4.00	2.86	4.29	2.92	4.64	2.92	4.73	3.04
35	2.86	2.07	3.14	2.49	3.43	2.57	3.71	2.80	4.00	2.86	4.29	2.92	4.54	2.88	4.63	3.01
37	2.86	2.07	3.14	2.49	3.43	2.57	3.71	2.80	4.00	2.86	4.27	2.91	4.44	2.84	4.53	2.97
40	2.86	2.07	3.14	2.49	3.43	2.57	3.71	2.80	4.00	2.86	4.11	2.84	4.29	2.78	4.37	2.91
43	2.86	2.07	3.14	2.49	3.43	2.57	3.71	2.80	3.89	2.81	3.96	2.78	4.13	2.72	4.21	2.85

■ MODEL : ARXB18

Outdoor temperature	Indoor temperature															
	20℃CDB / 15℃CWB		23℃CDB / 16℃CWB		24℃CDB / 17℃CWB		26℃CDB / 18℃CWB		27℃CDB / 19℃CWB		28℃CDB / 20℃CWB		30℃CDB / 22℃CWB		32℃CDB / 23℃CWB	
(℃CDB)	TC	SHC	TC	SHC	TC	SHC	TC	SHC	TC	SHC	TC	SHC	TC	SHC	TC	SHC
10	3.79	2.91	4.16	3.56	4.54	3.65	4.92	3.99	5.30	4.07	5.68	4.13	6.44	4.24	6.81	4.54
15	3.79	2.91	4.16	3.56	4.54	3.65	4.92	3.99	5.30	4.07	5.68	4.13	6.44	4.24	6.81	4.54
21	3.79	2.91	4.16	3.56	4.54	3.65	4.92	3.99	5.30	4.07	5.68	4.13	6.44	4.24	6.81	4.54
23	3.79	2.91	4.16	3.56	4.54	3.65	4.92	3.99	5.30	4.07	5.68	4.13	6.44	4.24	6.81	4.54
25	3.79	2.91	4.16	3.56	4.54	3.65	4.92	3.99	5.30	4.07	5.68	4.13	6.44	4.24	6.76	4.52
27	3.79	2.91	4.16	3.56	4.54	3.65	4.92	3.99	5.30	4.07	5.68	4.13	6.44	4.24	6.64	4.47
30	3.79	2.91	4.16	3.56	4.54	3.65	4.92	3.99	5.30	4.07	5.68	4.13	6.34	4.20	6.45	4.41
33	3.79	2.91	4.16	3.56	4.54	3.65	4.92	3.99	5.30	4.07	5.68	4.13	6.15	4.13	6.27	4.34
35	3.79	2.91	4.16	3.56	4.54	3.65	4.92	3.99	5.30	4.07	5.68	4.13	6.02	4.08	6.13	4.29
37	3.79	2.91	4.16	3.56	4.54	3.65	4.92	3.99	5.30	4.07	5.66	4.12	5.89	4.03	6.00	4.24
40	3.79	2.91	4.16	3.56	4.54	3.65	4.92	3.99	5.30	4.07	5.45	4.04	5.68	3.96	5.79	4.17
43	3.79	2.91	4.16	3.56	4.54	3.65	4.92	3.99	5.15	4.01	5.24	3.96	5.47	3.88	5.58	4.10

TC : Total Capacity kW.

SHC : Sensible Heat Capacity kW.

MODEL SELECTION

2-6-4. LOW STATIC PRESSURE DUCT TYPE

■ MODEL : ARXB25

Outdoor temperature	Indoor temperature															
	20℃CDB / 15℃CWB		23℃CDB / 16℃CWB		24℃CDB / 17℃CWB		26℃CDB / 18℃CWB		27℃CDB / 19℃CWB		28℃CDB / 20℃CWB		30℃CDB / 22℃CWB		32℃CDB / 23℃CWB	
(℃CDB)	TC	SHC	TC	SHC	TC	SHC	TC	SHC	TC	SHC	TC	SHC	TC	SHC	TC	SHC
10	5.00	3.72	5.50	4.51	6.00	4.64	6.50	5.07	7.00	5.17	7.50	5.26	8.50	5.40	9.00	5.78
15	5.00	3.72	5.50	4.51	6.00	4.64	6.50	5.07	7.00	5.17	7.50	5.26	8.50	5.40	9.00	5.78
21	5.00	3.72	5.50	4.51	6.00	4.64	6.50	5.07	7.00	5.17	7.50	5.26	8.50	5.40	9.00	5.78
23	5.00	3.72	5.50	4.51	6.00	4.64	6.50	5.07	7.00	5.17	7.50	5.26	8.50	5.40	9.00	5.78
25	5.00	3.72	5.50	4.51	6.00	4.64	6.50	5.07	7.00	5.17	7.50	5.26	8.50	5.40	8.93	5.75
27	5.00	3.72	5.50	4.51	6.00	4.64	6.50	5.07	7.00	5.17	7.50	5.26	8.50	5.40	8.78	5.69
30	5.00	3.72	5.50	4.51	6.00	4.64	6.50	5.07	7.00	5.17	7.50	5.26	8.38	5.36	8.53	5.60
33	5.00	3.72	5.50	4.51	6.00	4.64	6.50	5.07	7.00	5.17	7.50	5.26	8.13	5.26	8.28	5.51
35	5.00	3.72	5.50	4.51	6.00	4.64	6.50	5.07	7.00	5.17	7.50	5.26	7.95	5.19	8.10	5.44
37	5.00	3.72	5.50	4.51	6.00	4.64	6.50	5.07	7.00	5.17	7.48	5.25	7.78	5.13	7.93	5.38
40	5.00	3.72	5.50	4.51	6.00	4.64	6.50	5.07	7.00	5.17	7.20	5.14	7.50	5.03	7.65	5.28
43	5.00	3.72	5.50	4.51	6.00	4.64	6.50	5.07	6.80	5.09	6.93	5.03	7.23	4.92	7.38	5.18

■ MODEL : ARXB30

Outdoor temperature	Indoor temperature															
	20℃CDB / 15℃CWB		23℃CDB / 16℃CWB		24℃CDB / 17℃CWB		26℃CDB / 18℃CWB		27℃CDB / 19℃CWB		28℃CDB / 20℃CWB		30℃CDB / 22℃CWB		32℃CDB / 23℃CWB	
(℃CDB)	TC	SHC	TC	SHC	TC	SHC	TC	SHC	TC	SHC	TC	SHC	TC	SHC	TC	SHC
10	6.29	4.46	6.91	5.36	7.54	5.53	8.17	6.03	8.80	6.17	9.43	6.29	10.7	6.48	11.3	6.91
15	6.29	4.46	6.91	5.36	7.54	5.53	8.17	6.03	8.80	6.17	9.43	6.29	10.7	6.48	11.3	6.91
21	6.29	4.46	6.91	5.36	7.54	5.53	8.17	6.03	8.80	6.17	9.43	6.29	10.7	6.48	11.3	6.91
23	6.29	4.46	6.91	5.36	7.54	5.53	8.17	6.03	8.80	6.17	9.43	6.29	10.7	6.48	11.3	6.91
25	6.29	4.46	6.91	5.36	7.54	5.53	8.17	6.03	8.80	6.17	9.43	6.29	10.7	6.48	11.2	6.87
27	6.29	4.46	6.91	5.36	7.54	5.53	8.17	6.03	8.80	6.17	9.43	6.29	10.7	6.48	11.0	6.79
30	6.29	4.46	6.91	5.36	7.54	5.53	8.17	6.03	8.80	6.17	9.43	6.29	10.5	6.42	10.7	6.67
33	6.29	4.46	6.91	5.36	7.54	5.53	8.17	6.03	8.80	6.17	9.43	6.29	10.2	6.29	10.4	6.55
35	6.29	4.46	6.91	5.36	7.54	5.53	8.17	6.03	8.80	6.17	9.43	6.29	9.99	6.20	10.2	6.47
37	6.29	4.46	6.91	5.36	7.54	5.53	8.17	6.03	8.80	6.17	9.40	6.27	9.77	6.11	9.96	6.38
40	6.29	4.46	6.91	5.36	7.54	5.53	8.17	6.03	8.80	6.17	9.05	6.12	9.43	5.98	9.62	6.25
43	6.29	4.46	6.91	5.36	7.54	5.53	8.17	6.03	8.55	6.06	8.71	5.98	9.08	5.84	9.27	6.12

■ MODEL : ARXB36

Outdoor temperature	Indoor temperature															
	20℃CDB / 15℃CWB		23℃CDB / 16℃CWB		24℃CDB / 17℃CWB		26℃CDB / 18℃CWB		27℃CDB / 19℃CWB		28℃CDB / 20℃CWB		30℃CDB / 22℃CWB		32℃CDB / 23℃CWB	
(℃CDB)	TC	SHC	TC	SHC	TC	SHC	TC	SHC	TC	SHC	TC	SHC	TC	SHC	TC	SHC
10	7.50	5.33	8.25	6.41	9.00	6.61	9.75	7.21	10.5	7.37	11.3	7.51	12.8	7.75	13.5	8.26
15	7.50	5.33	8.25	6.41	9.00	6.61	9.75	7.21	10.5	7.37	11.3	7.51	12.8	7.75	13.5	8.26
21	7.50	5.33	8.25	6.41	9.00	6.61	9.75	7.21	10.5	7.37	11.3	7.51	12.8	7.75	13.5	8.26
23	7.50	5.33	8.25	6.41	9.00	6.61	9.75	7.21	10.5	7.37	11.3	7.51	12.8	7.75	13.5	8.26
25	7.50	5.33	8.25	6.41	9.00	6.61	9.75	7.21	10.5	7.37	11.3	7.51	12.8	7.75	13.4	8.21
27	7.50	5.33	8.25	6.41	9.00	6.61	9.75	7.21	10.5	7.37	11.3	7.51	12.8	7.75	13.2	8.12
30	7.50	5.33	8.25	6.41	9.00	6.61	9.75	7.21	10.5	7.37	11.3	7.51	12.6	7.67	12.8	7.98
33	7.50	5.33	8.25	6.41	9.00	6.61	9.75	7.21	10.5	7.37	11.3	7.51	12.2	7.52	12.4	7.83
35	7.50	5.33	8.25	6.41	9.00	6.61	9.75	7.21	10.5	7.37	11.3	7.51	11.9	7.41	12.2	7.73
37	7.50	5.33	8.25	6.41	9.00	6.61	9.75	7.21	10.5	7.37	11.2	7.50	11.7	7.31	11.9	7.63
40	7.50	5.33	8.25	6.41	9.00	6.61	9.75	7.21	10.5	7.37	10.8	7.32	11.3	7.15	11.5	7.48
43	7.50	5.33	8.25	6.41	9.00	6.61	9.75	7.21	10.2	7.24	10.4	7.15	10.8	6.99	11.1	7.32

■ MODEL : ARXB45

Outdoor temperature	Indoor temperature															
	20℃CDB / 15℃CWB		23℃CDB / 16℃CWB		24℃CDB / 17℃CWB		26℃CDB / 18℃CWB		27℃CDB / 19℃CWB		28℃CDB / 20℃CWB		30℃CDB / 22℃CWB		32℃CDB / 23℃CWB	
(℃CDB)	TC	SHC	TC	SHC	TC	SHC	TC	SHC	TC	SHC	TC	SHC	TC	SHC	TC	SHC
10	9.07	6.33	9.98	7.59	10.9	7.83	11.8	8.54	12.7	8.74	13.6	8.92	15.4	9.21	16.3	9.81
15	9.07	6.33	9.98	7.59	10.9	7.83	11.8	8.54	12.7	8.74	13.6	8.92	15.4	9.21	16.3	9.81
21	9.07	6.33	9.98	7.59	10.9	7.83	11.8	8.54	12.7	8.74	13.6	8.92	15.4	9.21	16.3	9.81
23	9.07	6.33	9.98	7.59	10.9	7.83	11.8	8.54	12.7	8.74	13.6	8.92	15.4	9.21	16.3	9.81
25	9.07	6.33	9.98	7.59	10.9	7.83	11.8	8.54	12.7	8.74	13.6	8.92	15.4	9.21	16.2	9.75
27	9.07	6.33	9.98	7.59	10.9	7.83	11.8	8.54	12.7	8.74	13.6	8.92	15.4	9.21	15.9	9.64
30	9.07	6.33	9.98	7.59	10.9	7.83	11.8	8.54	12.7	8.74	13.6	8.92	15.2	9.12	15.5	9.46
33	9.07	6.33	9.98	7.59	10.9	7.83	11.8	8.54	12.7	8.74	13.6	8.92	14.7	8.93	15.0	9.28
35	9.07	6.33	9.98	7.59	10.9	7.83	11.8	8.54	12.7	8.74	13.6	8.92	14.4	8.80	14.7	9.16
37	9.07	6.33	9.98	7.59	10.9	7.83	11.8	8.54	12.7	8.74	13.6	8.90	14.1	8.67	14.4	9.03
40	9.07	6.33	9.98	7.59	10.9	7.83	11.8	8.54	12.7	8.74	13.1	8.68	13.6	8.47	13.9	8.84
43	9.07	6.33	9.98	7.59	10.9	7.83	11.8	8.54	12.3	8.58	12.6	8.47	13.1	8.27	13.4	8.65

TC : Total Capacity kW.

SHC : Sensible Heat Capacity kW.

MODEL SELECTION

2-6-5. DUCT TYPE

■ MODEL : ARXA25

Outdoor temperature	Indoor temperature															
	20℃CDB / 15℃CWB		23℃CDB / 16℃CWB		24℃CDB / 17℃CWB		26℃CDB / 18℃CWB		27℃CDB / 19℃CWB		28℃CDB / 20℃CWB		30℃CDB / 22℃CWB		32℃CDB / 23℃CWB	
(℃CDB)	TC	SHC	TC	SHC	TC	SHC	TC	SHC	TC	SHC	TC	SHC	TC	SHC	TC	SHC
10	5.00	3.70	5.50	4.49	6.00	4.61	6.50	5.04	7.00	5.14	7.50	5.23	8.50	5.38	9.00	5.75
15	5.00	3.70	5.50	4.49	6.00	4.61	6.50	5.04	7.00	5.14	7.50	5.23	8.50	5.38	9.00	5.75
21	5.00	3.70	5.50	4.49	6.00	4.61	6.50	5.04	7.00	5.14	7.50	5.23	8.50	5.38	9.00	5.75
23	5.00	3.70	5.50	4.49	6.00	4.61	6.50	5.04	7.00	5.14	7.50	5.23	8.50	5.38	9.00	5.75
25	5.00	3.70	5.50	4.49	6.00	4.61	6.50	5.04	7.00	5.14	7.50	5.23	8.50	5.38	8.93	5.72
27	5.00	3.70	5.50	4.49	6.00	4.61	6.50	5.04	7.00	5.14	7.50	5.23	8.50	5.38	8.78	5.66
30	5.00	3.70	5.50	4.49	6.00	4.61	6.50	5.04	7.00	5.14	7.50	5.23	8.38	5.33	8.53	5.57
33	5.00	3.70	5.50	4.49	6.00	4.61	6.50	5.04	7.00	5.14	7.50	5.23	8.13	5.23	8.28	5.48
35	5.00	3.70	5.50	4.49	6.00	4.61	6.50	5.04	7.00	5.14	7.50	5.23	7.95	5.16	8.10	5.41
37	5.00	3.70	5.50	4.49	6.00	4.61	6.50	5.04	7.00	5.14	7.48	5.22	7.78	5.10	7.93	5.35
40	5.00	3.70	5.50	4.49	6.00	4.61	6.50	5.04	7.00	5.14	7.20	5.11	7.50	5.00	7.65	5.25
43	5.00	3.70	5.50	4.49	6.00	4.61	6.50	5.04	6.80	5.06	6.93	5.00	7.23	4.89	7.38	5.15

■ MODEL : ARXA30

Outdoor temperature	Indoor temperature															
	20℃CDB / 15℃CWB		23℃CDB / 16℃CWB		24℃CDB / 17℃CWB		26℃CDB / 18℃CWB		27℃CDB / 19℃CWB		28℃CDB / 20℃CWB		30℃CDB / 22℃CWB		32℃CDB / 23℃CWB	
(℃CDB)	TC	SHC	TC	SHC	TC	SHC	TC	SHC	TC	SHC	TC	SHC	TC	SHC	TC	SHC
10	6.29	4.68	6.91	5.67	7.54	5.83	8.17	6.38	8.80	6.50	9.43	6.61	10.7	6.79	11.3	7.26
15	6.29	4.68	6.91	5.67	7.54	5.83	8.17	6.38	8.80	6.50	9.43	6.61	10.7	6.79	11.3	7.26
21	6.29	4.68	6.91	5.67	7.54	5.83	8.17	6.38	8.80	6.50	9.43	6.61	10.7	6.79	11.3	7.26
23	6.29	4.68	6.91	5.67	7.54	5.83	8.17	6.38	8.80	6.50	9.43	6.61	10.7	6.79	11.3	7.26
25	6.29	4.68	6.91	5.67	7.54	5.83	8.17	6.38	8.80	6.50	9.43	6.61	10.7	6.79	11.2	7.23
27	6.29	4.68	6.91	5.67	7.54	5.83	8.17	6.38	8.80	6.50	9.43	6.61	10.7	6.79	11.0	7.15
30	6.29	4.68	6.91	5.67	7.54	5.83	8.17	6.38	8.80	6.50	9.43	6.61	10.5	6.73	10.7	7.04
33	6.29	4.68	6.91	5.67	7.54	5.83	8.17	6.38	8.80	6.50	9.43	6.61	10.2	6.61	10.4	6.92
35	6.29	4.68	6.91	5.67	7.54	5.83	8.17	6.38	8.80	6.50	9.43	6.61	9.99	6.53	10.2	6.84
37	6.29	4.68	6.91	5.67	7.54	5.83	8.17	6.38	8.80	6.50	9.40	6.60	9.77	6.44	9.96	6.76
40	6.29	4.68	6.91	5.67	7.54	5.83	8.17	6.38	8.80	6.50	9.05	6.46	9.43	6.32	9.62	6.64
43	6.29	4.68	6.91	5.67	7.54	5.83	8.17	6.38	8.55	6.40	8.71	6.32	9.08	6.19	9.27	6.51

■ MODEL : ARXA36

Outdoor temperature	Indoor temperature															
	20℃CDB / 15℃CWB		23℃CDB / 16℃CWB		24℃CDB / 17℃CWB		26℃CDB / 18℃CWB		27℃CDB / 19℃CWB		28℃CDB / 20℃CWB		30℃CDB / 22℃CWB		32℃CDB / 23℃CWB	
(℃CDB)	TC	SHC	TC	SHC	TC	SHC	TC	SHC	TC	SHC	TC	SHC	TC	SHC	TC	SHC
10	7.50	5.68	8.25	6.92	9.00	7.10	9.75	7.77	10.5	7.92	11.3	8.05	12.8	8.26	13.5	8.83
15	7.50	5.68	8.25	6.92	9.00	7.10	9.75	7.77	10.5	7.92	11.3	8.05	12.8	8.26	13.5	8.83
21	7.50	5.68	8.25	6.92	9.00	7.10	9.75	7.77	10.5	7.92	11.3	8.05	12.8	8.26	13.5	8.83
23	7.50	5.68	8.25	6.92	9.00	7.10	9.75	7.77	10.5	7.92	11.3	8.05	12.8	8.26	13.5	8.83
25	7.50	5.68	8.25	6.92	9.00	7.10	9.75	7.77	10.5	7.92	11.3	8.05	12.8	8.26	13.4	8.79
27	7.50	5.68	8.25	6.92	9.00	7.10	9.75	7.77	10.5	7.92	11.3	8.05	12.8	8.26	13.2	8.71
30	7.50	5.68	8.25	6.92	9.00	7.10	9.75	7.77	10.5	7.92	11.3	8.05	12.6	8.19	12.8	8.57
33	7.50	5.68	8.25	6.92	9.00	7.10	9.75	7.77	10.5	7.92	11.3	8.05	12.2	8.04	12.4	8.44
35	7.50	5.68	8.25	6.92	9.00	7.10	9.75	7.77	10.5	7.92	11.3	8.05	11.9	7.94	12.2	8.34
37	7.50	5.68	8.25	6.92	9.00	7.10	9.75	7.77	10.5	7.92	11.2	8.03	11.7	7.85	11.9	8.25
40	7.50	5.68	8.25	6.92	9.00	7.10	9.75	7.77	10.5	7.92	10.8	7.87	11.3	7.70	11.5	8.10
43	7.50	5.68	8.25	6.92	9.00	7.10	9.75	7.77	10.2	7.80	10.4	7.71	10.8	7.54	11.1	7.96

■ MODEL : ARXA45

Outdoor temperature	Indoor temperature															
	20℃CDB / 15℃CWB		23℃CDB / 16℃CWB		24℃CDB / 17℃CWB		26℃CDB / 18℃CWB		27℃CDB / 19℃CWB		28℃CDB / 20℃CWB		30℃CDB / 22℃CWB		32℃CDB / 23℃CWB	
(℃CDB)	TC	SHC	TC	SHC	TC	SHC	TC	SHC	TC	SHC	TC	SHC	TC	SHC	TC	SHC
10	9.07	6.57	9.98	7.93	10.9	8.16	11.8	8.92	12.7	9.11	13.6	9.28	15.4	9.55	16.3	10.2
15	9.07	6.57	9.98	7.93	10.9	8.16	11.8	8.92	12.7	9.11	13.6	9.28	15.4	9.55	16.3	10.2
21	9.07	6.57	9.98	7.93	10.9	8.16	11.8	8.92	12.7	9.11	13.6	9.28	15.4	9.55	16.3	10.2
23	9.07	6.57	9.98	7.93	10.9	8.16	11.8	8.92	12.7	9.11	13.6	9.28	15.4	9.55	16.3	10.2
25	9.07	6.57	9.98	7.93	10.9	8.16	11.8	8.92	12.7	9.11	13.6	9.28	15.4	9.55	16.2	10.1
27	9.07	6.57	9.98	7.93	10.9	8.16	11.8	8.92	12.7	9.11	13.6	9.28	15.4	9.55	15.9	10.0
30	9.07	6.57	9.98	7.93	10.9	8.16	11.8	8.92	12.7	9.11	13.6	9.28	15.2	9.46	15.5	9.86
33	9.07	6.57	9.98	7.93	10.9	8.16	11.8	8.92	12.7	9.11	13.6	9.28	14.7	9.27	15.0	9.68
35	9.07	6.57	9.98	7.93	10.9	8.16	11.8	8.92	12.7	9.11	13.6	9.28	14.4	9.15	14.7	9.57
37	9.07	6.57	9.98	7.93	10.9	8.16	11.8	8.92	12.7	9.11	13.6	9.25	14.1	9.03	14.4	9.45
40	9.07	6.57	9.98	7.93	10.9	8.16	11.8	8.92	12.7	9.11	13.1	9.05	13.6	8.84	13.9	9.26
43	9.07	6.57	9.98	7.93	10.9	8.16	11.8	8.92	12.3	8.95	12.6	8.84	13.1	8.65	13.4	9.08

TC : Total Capacity kW.

SHC : Sensible Heat Capacity kW.

MODEL SELECTION

2-6-6. HIGH STATIC PRESSURE DUCT TYPE

■ MODEL : ARXC36

Outdoor temperature	Indoor temperature															
	20℃CDB / 15℃CWB		23℃CDB / 16℃CWB		24℃CDB / 17℃CWB		26℃CDB / 18℃CWB		27℃CDB / 19℃CWB		28℃CDB / 20℃CWB		30℃CDB / 22℃CWB		32℃CDB / 23℃CWB	
(℃CDB)	TC	SHC	TC	SHC	TC	SHC	TC	SHC	TC	SHC	TC	SHC	TC	SHC	TC	SHC
10	7.50	5.93	8.25	7.26	9.00	7.44	9.75	8.16	10.5	8.30	11.3	8.43	12.8	8.63	13.5	9.25
15	7.50	5.93	8.25	7.26	9.00	7.44	9.75	8.16	10.5	8.30	11.3	8.43	12.8	8.63	13.5	9.25
21	7.50	5.93	8.25	7.26	9.00	7.44	9.75	8.16	10.5	8.30	11.3	8.43	12.8	8.63	13.5	9.25
23	7.50	5.93	8.25	7.26	9.00	7.44	9.75	8.16	10.5	8.30	11.3	8.43	12.8	8.63	13.5	9.25
25	7.50	5.93	8.25	7.26	9.00	7.44	9.75	8.16	10.5	8.30	11.3	8.43	12.8	8.63	13.4	9.21
27	7.50	5.93	8.25	7.26	9.00	7.44	9.75	8.16	10.5	8.30	11.3	8.43	12.8	8.63	13.2	9.13
30	7.50	5.93	8.25	7.26	9.00	7.44	9.75	8.16	10.5	8.30	11.3	8.43	12.6	8.56	12.8	9.00
33	7.50	5.93	8.25	7.26	9.00	7.44	9.75	8.16	10.5	8.30	11.3	8.43	12.2	8.42	12.4	8.86
35	7.50	5.93	8.25	7.26	9.00	7.44	9.75	8.16	10.5	8.30	11.3	8.43	11.9	8.32	12.2	8.77
37	7.50	5.93	8.25	7.26	9.00	7.44	9.75	8.16	10.5	8.30	11.2	8.41	11.7	8.23	11.9	8.68
40	7.50	5.93	8.25	7.26	9.00	7.44	9.75	8.16	10.5	8.30	10.8	8.25	11.3	8.08	11.5	8.54
43	7.50	5.93	8.25	7.26	9.00	7.44	9.75	8.16	10.2	8.18	10.4	8.09	10.8	7.93	11.1	8.40

■ MODEL : ARXC45

Outdoor temperature	Indoor temperature															
	20℃CDB / 15℃CWB		23℃CDB / 16℃CWB		24℃CDB / 17℃CWB		26℃CDB / 18℃CWB		27℃CDB / 19℃CWB		28℃CDB / 20℃CWB		30℃CDB / 22℃CWB		32℃CDB / 23℃CWB	
(℃CDB)	TC	SHC	TC	SHC	TC	SHC	TC	SHC	TC	SHC	TC	SHC	TC	SHC	TC	SHC
10	9.07	7.68	9.98	9.50	10.9	9.70	11.8	10.7	12.7	10.8	13.6	11.0	15.4	11.2	16.3	12.0
15	9.07	7.68	9.98	9.50	10.9	9.70	11.8	10.7	12.7	10.8	13.6	11.0	15.4	11.2	16.3	12.0
21	9.07	7.68	9.98	9.50	10.9	9.70	11.8	10.7	12.7	10.8	13.6	11.0	15.4	11.2	16.3	12.0
23	9.07	7.68	9.98	9.50	10.9	9.70	11.8	10.7	12.7	10.8	13.6	11.0	15.4	11.2	16.3	12.0
25	9.07	7.68	9.98	9.50	10.9	9.70	11.8	10.7	12.7	10.8	13.6	11.0	15.4	11.2	16.2	12.0
27	9.07	7.68	9.98	9.50	10.9	9.70	11.8	10.7	12.7	10.8	13.6	11.0	15.4	11.2	15.9	11.9
30	9.07	7.68	9.98	9.50	10.9	9.70	11.8	10.7	12.7	10.8	13.6	11.0	15.2	11.1	15.5	11.7
33	9.07	7.68	9.98	9.50	10.9	9.70	11.8	10.7	12.7	10.8	13.6	11.0	14.7	10.9	15.0	11.6
35	9.07	7.68	9.98	9.50	10.9	9.70	11.8	10.7	12.7	10.8	13.6	11.0	14.4	10.8	14.7	11.5
37	9.07	7.68	9.98	9.50	10.9	9.70	11.8	10.7	12.7	10.8	13.6	11.0	14.1	10.7	14.4	11.4
40	9.07	7.68	9.98	9.50	10.9	9.70	11.8	10.7	12.7	10.8	13.1	10.8	13.6	10.6	13.9	11.2
43	9.07	7.68	9.98	9.50	10.9	9.70	11.8	10.7	12.3	10.7	12.6	10.6	13.1	10.4	13.4	11.0

■ MODEL : ARXC60

Outdoor temperature	Indoor temperature															
	20℃CDB / 15℃CWB		23℃CDB / 16℃CWB		24℃CDB / 17℃CWB		26℃CDB / 18℃CWB		27℃CDB / 19℃CWB		28℃CDB / 20℃CWB		30℃CDB / 22℃CWB		32℃CDB / 23℃CWB	
(℃CDB)	TC	SHC	TC	SHC	TC	SHC	TC	SHC	TC	SHC	TC	SHC	TC	SHC	TC	SHC
10	12.1	9.89	13.4	12.2	14.6	12.4	15.8	13.7	17.0	13.9	18.2	14.1	20.6	14.4	21.9	15.5
15	12.1	9.89	13.4	12.2	14.6	12.4	15.8	13.7	17.0	13.9	18.2	14.1	20.6	14.4	21.9	15.5
21	12.1	9.89	13.4	12.2	14.6	12.4	15.8	13.7	17.0	13.9	18.2	14.1	20.6	14.4	21.9	15.5
23	12.1	9.89	13.4	12.2	14.6	12.4	15.8	13.7	17.0	13.9	18.2	14.1	20.6	14.4	21.9	15.5
25	12.1	9.89	13.4	12.2	14.6	12.4	15.8	13.7	17.0	13.9	18.2	14.1	20.6	14.4	21.7	15.4
27	12.1	9.89	13.4	12.2	14.6	12.4	15.8	13.7	17.0	13.9	18.2	14.1	20.6	14.4	21.3	15.3
30	12.1	9.89	13.4	12.2	14.6	12.4	15.8	13.7	17.0	13.9	18.2	14.1	20.3	14.3	20.7	15.1
33	12.1	9.89	13.4	12.2	14.6	12.4	15.8	13.7	17.0	13.9	18.2	14.1	19.7	14.1	20.1	14.8
35	12.1	9.89	13.4	12.2	14.6	12.4	15.8	13.7	17.0	13.9	18.2	14.1	19.3	13.9	19.7	14.7
37	12.1	9.89	13.4	12.2	14.6	12.4	15.8	13.7	17.0	13.9	18.2	14.1	18.9	13.8	19.2	14.6
40	12.1	9.89	13.4	12.2	14.6	12.4	15.8	13.7	17.0	13.9	17.5	13.8	18.2	13.5	18.6	14.3
43	12.1	9.89	13.4	12.2	14.6	12.4	15.8	13.7	16.5	13.7	16.8	13.6	17.5	13.3	17.9	14.1

■ MODEL : ARXC90

Outdoor temperature	Indoor temperature															
	20℃CDB / 15℃CWB		23℃CDB / 16℃CWB		24℃CDB / 17℃CWB		26℃CDB / 18℃CWB		27℃CDB / 19℃CWB		28℃CDB / 20℃CWB		30℃CDB / 22℃CWB		32℃CDB / 23℃CWB	
(℃CDB)	TC	SHC	TC	SHC	TC	SHC	TC	SHC	TC	SHC	TC	SHC	TC	SHC	TC	SHC
10	18.1	13.2	20.0	15.9	21.8	16.3	23.6	17.9	25.4	18.2	27.2	18.6	30.8	19.1	32.7	20.4
15	18.1	13.2	20.0	15.9	21.8	16.3	23.6	17.9	25.4	18.2	27.2	18.6	30.8	19.1	32.7	20.4
21	18.1	13.2	20.0	15.9	21.8	16.3	23.6	17.9	25.4	18.2	27.2	18.6	30.8	19.1	32.7	20.4
23	18.1	13.2	20.0	15.9	21.8	16.3	23.6	17.9	25.4	18.2	27.2	18.6	30.8	19.1	32.7	20.4
25	18.1	13.2	20.0	15.9	21.8	16.3	23.6	17.9	25.4	18.2	27.2	18.6	30.8	19.1	32.4	20.3
27	18.1	13.2	20.0	15.9	21.8	16.3	23.6	17.9	25.4	18.2	27.2	18.6	30.8	19.1	31.8	20.1
30	18.1	13.2	20.0	15.9	21.8	16.3	23.6	17.9	25.4	18.2	27.2	18.6	30.4	18.9	30.9	19.7
33	18.1	13.2	20.0	15.9	21.8	16.3	23.6	17.9	25.4	18.2	27.2	18.6	29.5	18.6	30.0	19.4
35	18.1	13.2	20.0	15.9	21.8	16.3	23.6	17.9	25.4	18.2	27.2	18.6	28.8	18.3	29.4	19.2
37	18.1	13.2	20.0	15.9	21.8	16.3	23.6	17.9	25.4	18.2	27.1	18.5	28.2	18.1	28.8	18.9
40	18.1	13.2	20.0	15.9	21.8	16.3	23.6	17.9	25.4	18.2	26.1	18.1	27.2	17.7	27.8	18.6
43	18.1	13.2	20.0	15.9	21.8	16.3	23.6	17.9	24.7	17.9	25.1	17.7	26.2	17.3	26.8	18.2

TC : Total Capacity kW.

SHC : Sensible Heat Capacity kW.

MODEL SELECTION

2-6-7. FLOOR / CEILING TYPE

■ MODEL : AB∗A12

Outdoor temperature	Indoor temperature															
	20℃CDB / 15℃CWB		23℃CDB / 16℃CWB		24℃CDB / 17℃CWB		26℃CDB / 18℃CWB		27℃CDB / 19℃CWB		28℃CDB / 20℃CWB		30℃CDB / 22℃CWB		32℃CDB / 23℃CWB	
(℃CDB)	TC	SHC	TC	SHC	TC	SHC	TC	SHC	TC	SHC	TC	SHC	TC	SHC	TC	SHC
10	2.57	2.02	2.83	2.47	3.09	2.54	3.34	2.78	3.60	2.83	3.86	2.87	4.37	2.94	4.63	3.15
15	2.57	2.02	2.83	2.47	3.09	2.54	3.34	2.78	3.60	2.83	3.86	2.87	4.37	2.94	4.63	3.15
21	2.57	2.02	2.83	2.47	3.09	2.54	3.34	2.78	3.60	2.83	3.86	2.87	4.37	2.94	4.63	3.15
23	2.57	2.02	2.83	2.47	3.09	2.54	3.34	2.78	3.60	2.83	3.86	2.87	4.37	2.94	4.63	3.15
25	2.57	2.02	2.83	2.47	3.09	2.54	3.34	2.78	3.60	2.83	3.86	2.87	4.37	2.94	4.59	3.14
27	2.57	2.02	2.83	2.47	3.09	2.54	3.34	2.78	3.60	2.83	3.86	2.87	4.37	2.94	4.51	3.11
30	2.57	2.02	2.83	2.47	3.09	2.54	3.34	2.78	3.60	2.83	3.86	2.87	4.31	2.91	4.38	3.06
33	2.57	2.02	2.83	2.47	3.09	2.54	3.34	2.78	3.60	2.83	3.86	2.87	4.18	2.87	4.26	3.02
35	2.57	2.02	2.83	2.47	3.09	2.54	3.34	2.78	3.60	2.83	3.86	2.87	4.09	2.83	4.17	2.99
37	2.57	2.02	2.83	2.47	3.09	2.54	3.34	2.78	3.60	2.83	3.84	2.87	4.00	2.80	4.08	2.96
40	2.57	2.02	2.83	2.47	3.09	2.54	3.34	2.78	3.60	2.83	3.70	2.81	3.86	2.75	3.93	2.91
43	2.57	2.02	2.83	2.47	3.09	2.54	3.34	2.78	3.50	2.79	3.56	2.76	3.72	2.70	3.79	2.86

■ MODEL : AB∗A14

Outdoor temperature																
	TC	SHC	TC	SHC	TC	SHC	TC	SHC	TC	SHC	TC	SHC	TC	SHC	TC	SHC
10	2.89	2.17	3.18	2.63	3.47	2.70	3.76	2.95	4.05	3.01	4.34	3.06	4.92	3.15	5.21	3.36
15	2.89	2.17	3.18	2.63	3.47	2.70	3.76	2.95	4.05	3.01	4.34	3.06	4.92	3.15	5.21	3.36
21	2.89	2.17	3.18	2.63	3.47	2.70	3.76	2.95	4.05	3.01	4.34	3.06	4.92	3.15	5.21	3.36
23	2.89	2.17	3.18	2.63	3.47	2.70	3.76	2.95	4.05	3.01	4.34	3.06	4.92	3.15	5.21	3.36
25	2.89	2.17	3.18	2.63	3.47	2.70	3.76	2.95	4.05	3.01	4.34	3.06	4.92	3.15	5.16	3.35
27	2.89	2.17	3.18	2.63	3.47	2.70	3.76	2.95	4.05	3.01	4.34	3.06	4.92	3.15	5.08	3.31
30	2.89	2.17	3.18	2.63	3.47	2.70	3.76	2.95	4.05	3.01	4.34	3.06	4.85	3.12	4.93	3.26
33	2.89	2.17	3.18	2.63	3.47	2.70	3.76	2.95	4.05	3.01	4.34	3.06	4.70	3.06	4.79	3.21
35	2.89	2.17	3.18	2.63	3.47	2.70	3.76	2.95	4.05	3.01	4.34	3.06	4.60	3.02	4.69	3.17
37	2.89	2.17	3.18	2.63	3.47	2.70	3.76	2.95	4.05	3.01	4.32	3.06	4.50	2.99	4.59	3.13
40	2.89	2.17	3.18	2.63	3.47	2.70	3.76	2.95	4.05	3.01	4.17	2.99	4.34	2.93	4.43	3.08
43	2.89	2.17	3.18	2.63	3.47	2.70	3.76	2.95	3.93	2.97	4.01	2.93	4.18	2.87	4.27	3.02

■ MODEL : AB∗A18

Outdoor temperature	Indoor temperature															
	20℃CDB / 15℃CWB		23℃CDB / 16℃CWB		24℃CDB / 17℃CWB		26℃CDB / 18℃CWB		27℃CDB / 19℃CWB		28℃CDB / 20℃CWB		30℃CDB / 22℃CWB		32℃CDB / 23℃CWB	
(℃CDB)	TC	SHC	TC	SHC	TC	SHC	TC	SHC	TC	SHC	TC	SHC	TC	SHC	TC	SHC
10	3.79	2.76	4.16	3.33	4.54	3.43	4.92	3.75	5.30	3.83	5.68	3.89	6.44	4.01	6.81	4.28
15	3.79	2.76	4.16	3.33	4.54	3.43	4.92	3.75	5.30	3.83	5.68	3.89	6.44	4.01	6.81	4.28
21	3.79	2.76	4.16	3.33	4.54	3.43	4.92	3.75	5.30	3.83	5.68	3.89	6.44	4.01	6.81	4.28
23	3.79	2.76	4.16	3.33	4.54	3.43	4.92	3.75	5.30	3.83	5.68	3.89	6.44	4.01	6.81	4.28
25	3.79	2.76	4.16	3.33	4.54	3.43	4.92	3.75	5.30	3.83	5.68	3.89	6.44	4.01	6.76	4.26
27	3.79	2.76	4.16	3.33	4.54	3.43	4.92	3.75	5.30	3.83	5.68	3.89	6.44	4.01	6.64	4.21
30	3.79	2.76	4.16	3.33	4.54	3.43	4.92	3.75	5.30	3.83	5.68	3.89	6.34	3.97	6.45	4.14
33	3.79	2.76	4.16	3.33	4.54	3.43	4.92	3.75	5.30	3.83	5.68	3.89	6.15	3.89	6.27	4.07
35	3.79	2.76	4.16	3.33	4.54	3.43	4.92	3.75	5.30	3.83	5.68	3.89	6.02	3.84	6.13	4.02
37	3.79	2.76	4.16	3.33	4.54	3.43	4.92	3.75	5.30	3.83	5.66	3.89	5.89	3.79	6.00	3.97
40	3.79	2.76	4.16	3.33	4.54	3.43	4.92	3.75	5.30	3.83	5.45	3.80	5.68	3.71	5.79	3.89
43	3.79	2.76	4.16	3.33	4.54	3.43	4.92	3.75	5.15	3.76	5.24	3.72	5.47	3.63	5.58	3.82

■ MODEL : AB∗A24

Outdoor temperature	Indoor temperature															
	20℃CDB / 15℃CWB		23℃CDB / 16℃CWB		24℃CDB / 17℃CWB		26℃CDB / 18℃CWB		27℃CDB / 19℃CWB		28℃CDB / 20℃CWB		30℃CDB / 22℃CWB		32℃CDB / 23℃CWB	
(℃CDB)	TC	SHC	TC	SHC	TC	SHC	TC	SHC	TC	SHC	TC	SHC	TC	SHC	TC	SHC
10	4.71	3.32	5.19	3.98	5.66	4.11	6.13	4.48	6.60	4.59	7.07	4.68	8.01	4.83	8.49	5.14
15	4.71	3.32	5.19	3.98	5.66	4.11	6.13	4.48	6.60	4.59	7.07	4.68	8.01	4.83	8.49	5.14
21	4.71	3.32	5.19	3.98	5.66	4.11	6.13	4.48	6.60	4.59	7.07	4.68	8.01	4.83	8.49	5.14
23	4.71	3.32	5.19	3.98	5.66	4.11	6.13	4.48	6.60	4.59	7.07	4.68	8.01	4.83	8.49	5.14
25	4.71	3.32	5.19	3.98	5.66	4.11	6.13	4.48	6.60	4.59	7.07	4.68	8.01	4.83	8.42	5.11
27	4.71	3.32	5.19	3.98	5.66	4.11	6.13	4.48	6.60	4.59	7.07	4.68	8.01	4.83	8.27	5.06
30	4.71	3.32	5.19	3.98	5.66	4.11	6.13	4.48	6.60	4.59	7.07	4.68	7.90	4.78	8.04	4.96
33	4.71	3.32	5.19	3.98	5.66	4.11	6.13	4.48	6.60	4.59	7.07	4.68	7.66	4.68	7.80	4.87
35	4.71	3.32	5.19	3.98	5.66	4.11	6.13	4.48	6.60	4.59	7.07	4.68	7.50	4.61	7.64	4.81
37	4.71	3.32	5.19	3.98	5.66	4.11	6.13	4.48	6.60	4.59	7.05	4.67	7.33	4.55	7.47	4.74
40	4.71	3.32	5.19	3.98	5.66	4.11	6.13	4.48	6.60	4.59	6.79	4.55	7.07	4.45	7.21	4.64
43	4.71	3.32	5.19	3.98	5.66	4.11	6.13	4.48	6.41	4.50	6.53	4.45	6.81	4.34	6.95	4.55

TC : Total Capacity kW.

SHC : Sensible Heat Capacity kW.

MODEL SELECTION

2-6-8. CEILING TYPE

■ MODEL : AB∗A30

Outdoor temperature	Indoor temperature															
	20℃CDB / 15℃CWB		23℃CDB / 16℃CWB		24℃CDB / 17℃CWB		26℃CDB / 18℃CWB		27℃CDB / 19℃CWB		28℃CDB / 20℃CWB		30℃CDB / 22℃CWB		32℃CDB / 23℃CWB	
(℃DB)	TC	SHC	TC	SHC	TC	SHC	TC	SHC	TC	SHC	TC	SHC	TC	SHC	TC	SHC
10	6.29	4.78	6.91	5.83	7.54	5.98	8.17	6.55	8.80	6.67	9.43	6.78	10.7	6.95	11.3	7.44
15	6.29	4.78	6.91	5.83	7.54	5.98	8.17	6.55	8.80	6.67	9.43	6.78	10.7	6.95	11.3	7.44
21	6.29	4.78	6.91	5.83	7.54	5.98	8.17	6.55	8.80	6.67	9.43	6.78	10.7	6.95	11.3	7.44
23	6.29	4.78	6.91	5.83	7.54	5.98	8.17	6.55	8.80	6.67	9.43	6.78	10.7	6.95	11.3	7.44
25	6.29	4.78	6.91	5.83	7.54	5.98	8.17	6.55	8.80	6.67	9.43	6.78	10.7	6.95	11.2	7.40
27	6.29	4.78	6.91	5.83	7.54	5.98	8.17	6.55	8.80	6.67	9.43	6.78	10.7	6.95	11.0	7.33
30	6.29	4.78	6.91	5.83	7.54	5.98	8.17	6.55	8.80	6.67	9.43	6.78	10.5	6.89	10.7	7.22
33	6.29	4.78	6.91	5.83	7.54	5.98	8.17	6.55	8.80	6.67	9.43	6.78	10.2	6.77	10.4	7.11
35	6.29	4.78	6.91	5.83	7.54	5.98	8.17	6.55	8.80	6.67	9.43	6.78	9.99	6.69	10.2	7.03
37	6.29	4.78	6.91	5.83	7.54	5.98	8.17	6.55	8.80	6.67	9.40	6.76	9.77	6.61	9.96	6.95
40	6.29	4.78	6.91	5.83	7.54	5.98	8.17	6.55	8.80	6.67	9.05	6.63	9.43	6.48	9.62	6.83
43	6.29	4.78	6.91	5.83	7.54	5.98	8.17	6.55	8.55	6.57	8.71	6.49	9.08	6.36	9.27	6.71

■ MODEL : AB∗A36

Outdoor temperature	Indoor temperature															
	20℃CDB / 15℃CWB		23℃CDB / 16℃CWB		24℃CDB / 17℃CWB		26℃CDB / 18℃CWB		27℃CDB / 19℃CWB		28℃CDB / 20℃CWB		30℃CDB / 22℃CWB		32℃CDB / 23℃CWB	
(℃DB)	TC	SHC	TC	SHC	TC	SHC	TC	SHC	TC	SHC	TC	SHC	TC	SHC	TC	SHC
10	7.50	5.61	8.25	6.82	9.00	7.00	9.75	7.66	10.5	7.81	11.3	7.94	12.8	8.16	13.5	8.72
15	7.50	5.61	8.25	6.82	9.00	7.00	9.75	7.66	10.5	7.81	11.3	7.94	12.8	8.16	13.5	8.72
21	7.50	5.61	8.25	6.82	9.00	7.00	9.75	7.66	10.5	7.81	11.3	7.94	12.8	8.16	13.5	8.72
23	7.50	5.61	8.25	6.82	9.00	7.00	9.75	7.66	10.5	7.81	11.3	7.94	12.8	8.16	13.5	8.72
25	7.50	5.61	8.25	6.82	9.00	7.00	9.75	7.66	10.5	7.81	11.3	7.94	12.8	8.16	13.4	8.68
27	7.50	5.61	8.25	6.82	9.00	7.00	9.75	7.66	10.5	7.81	11.3	7.94	12.8	8.16	13.2	8.59
30	7.50	5.61	8.25	6.82	9.00	7.00	9.75	7.66	10.5	7.81	11.3	7.94	12.6	8.08	12.8	8.46
33	7.50	5.61	8.25	6.82	9.00	7.00	9.75	7.66	10.5	7.81	11.3	7.94	12.2	7.94	12.4	8.32
35	7.50	5.61	8.25	6.82	9.00	7.00	9.75	7.66	10.5	7.81	11.3	7.94	11.9	7.84	12.2	8.22
37	7.50	5.61	8.25	6.82	9.00	7.00	9.75	7.66	10.5	7.81	11.2	7.93	11.7	7.74	11.9	8.13
40	7.50	5.61	8.25	6.82	9.00	7.00	9.75	7.66	10.5	7.81	10.8	7.76	11.3	7.59	11.5	7.98
43	7.50	5.61	8.25	6.82	9.00	7.00	9.75	7.66	10.2	7.69	10.4	7.60	10.8	7.44	11.1	7.83

■ MODEL : AB∗A45

Outdoor temperature	Indoor temperature															
	20℃CDB / 15℃CWB		23℃CDB / 16℃CWB		24℃CDB / 17℃CWB		26℃CDB / 18℃CWB		27℃CDB / 19℃CWB		28℃CDB / 20℃CWB		30℃CDB / 22℃CWB		32℃CDB / 23℃CWB	
(℃DB)	TC	SHC	TC	SHC	TC	SHC	TC	SHC	TC	SHC	TC	SHC	TC	SHC	TC	SHC
10	9.07	6.58	9.98	7.95	10.9	8.18	11.8	8.94	12.7	9.13	13.6	9.30	15.4	9.57	16.3	10.2
15	9.07	6.58	9.98	7.95	10.9	8.18	11.8	8.94	12.7	9.13	13.6	9.30	15.4	9.57	16.3	10.2
21	9.07	6.58	9.98	7.95	10.9	8.18	11.8	8.94	12.7	9.13	13.6	9.30	15.4	9.57	16.3	10.2
23	9.07	6.58	9.98	7.95	10.9	8.18	11.8	8.94	12.7	9.13	13.6	9.30	15.4	9.57	16.3	10.2
25	9.07	6.58	9.98	7.95	10.9	8.18	11.8	8.94	12.7	9.13	13.6	9.30	15.4	9.57	16.2	10.2
27	9.07	6.58	9.98	7.95	10.9	8.18	11.8	8.94	12.7	9.13	13.6	9.30	15.4	9.57	15.9	10.1
30	9.07	6.58	9.98	7.95	10.9	8.18	11.8	8.94	12.7	9.13	13.6	9.30	15.2	9.48	15.5	9.88
33	9.07	6.58	9.98	7.95	10.9	8.18	11.8	8.94	12.7	9.13	13.6	9.30	14.7	9.29	15.0	9.71
35	9.07	6.58	9.98	7.95	10.9	8.18	11.8	8.94	12.7	9.13	13.6	9.30	14.4	9.17	14.7	9.59
37	9.07	6.58	9.98	7.95	10.9	8.18	11.8	8.94	12.7	9.13	13.6	9.27	14.1	9.05	14.4	9.47
40	9.07	6.58	9.98	7.95	10.9	8.18	11.8	8.94	12.7	9.13	13.1	9.07	13.6	8.86	13.9	9.29
43	9.07	6.58	9.98	7.95	10.9	8.18	11.8	8.94	12.3	8.98	12.6	8.86	13.1	8.67	13.4	9.10

■ MODEL : AB∗A54

Outdoor temperature	Indoor temperature															
	20℃CDB / 15℃CWB		23℃CDB / 16℃CWB		24℃CDB / 17℃CWB		26℃CDB / 18℃CWB		27℃CDB / 19℃CWB		28℃CDB / 20℃CWB		30℃CDB / 22℃CWB		32℃CDB / 23℃CWB	
(℃DB)	TC	SHC	TC	SHC	TC	SHC	TC	SHC	TC	SHC	TC	SHC	TC	SHC	TC	SHC
10	10.1	7.50	11.1	9.10	12.1	9.35	13.1	10.2	14.1	10.4	15.1	10.6	17.1	10.9	18.1	11.6
15	10.1	7.50	11.1	9.10	12.1	9.35	13.1	10.2	14.1	10.4	15.1	10.6	17.1	10.9	18.1	11.6
21	10.1	7.50	11.1	9.10	12.1	9.35	13.1	10.2	14.1	10.4	15.1	10.6	17.1	10.9	18.1	11.6
23	10.1	7.50	11.1	9.10	12.1	9.35	13.1	10.2	14.1	10.4	15.1	10.6	17.1	10.9	18.1	11.6
25	10.1	7.50	11.1	9.10	12.1	9.35	13.1	10.2	14.1	10.4	15.1	10.6	17.1	10.9	18.0	11.6
27	10.1	7.50	11.1	9.10	12.1	9.35	13.1	10.2	14.1	10.4	15.1	10.6	17.1	10.9	17.7	11.5
30	10.1	7.50	11.1	9.10	12.1	9.35	13.1	10.2	14.1	10.4	15.1	10.6	16.9	10.8	17.2	11.3
33	10.1	7.50	11.1	9.10	12.1	9.35	13.1	10.2	14.1	10.4	15.1	10.6	16.4	10.6	16.7	11.1
35	10.1	7.50	11.1	9.10	12.1	9.35	13.1	10.2	14.1	10.4	15.1	10.6	16.0	10.5	16.3	11.0
37	10.1	7.50	11.1	9.10	12.1	9.35	13.1	10.2	14.1	10.4	15.1	10.6	15.7	10.3	16.0	10.8
40	10.1	7.50	11.1	9.10	12.1	9.35	13.1	10.2	14.1	10.4	14.5	10.4	15.1	10.1	15.4	10.6
43	10.1	7.50	11.1	9.10	12.1	9.35	13.1	10.2	13.7	10.3	13.9	10.1	14.6	9.93	14.9	10.5

TC : Total Capacity kW.

SHC : Sensible Heat Capacity kW.

MODEL SELECTION

2-6-9. COMPACT WALL MOUNTED TYPE (Comfort model)

■ MODEL : AS∗E07

Outdoor temperature	Indoor temperature															
	20℃CDB / 15℃CWB		23℃CDB / 16℃CWB		24℃CDB / 17℃CWB		26℃CDB / 18℃CWB		27℃CDB / 19℃CWB		28℃CDB / 20℃CWB		30℃CDB / 22℃CWB		32℃CDB / 23℃CWB	
(℃DB)	TC	SHC	TC	SHC	TC	SHC	TC	SHC	TC	SHC	TC	SHC	TC	SHC	TC	SHC
10	1.57	1.30	1.73	1.60	1.89	1.64	2.04	1.80	2.20	1.83	2.36	1.85	2.67	1.89	2.83	2.03
15	1.57	1.30	1.73	1.60	1.89	1.64	2.04	1.80	2.20	1.83	2.36	1.85	2.67	1.89	2.83	2.03
21	1.57	1.30	1.73	1.60	1.89	1.64	2.04	1.80	2.20	1.83	2.36	1.85	2.67	1.89	2.83	2.03
23	1.57	1.30	1.73	1.60	1.89	1.64	2.04	1.80	2.20	1.83	2.36	1.85	2.67	1.89	2.83	2.03
25	1.57	1.30	1.73	1.60	1.89	1.64	2.04	1.80	2.20	1.83	2.36	1.85	2.67	1.89	2.81	2.02
27	1.57	1.30	1.73	1.60	1.89	1.64	2.04	1.80	2.20	1.83	2.36	1.85	2.67	1.89	2.76	2.01
30	1.57	1.30	1.73	1.60	1.89	1.64	2.04	1.80	2.20	1.83	2.36	1.85	2.63	1.88	2.68	1.98
33	1.57	1.30	1.73	1.60	1.89	1.64	2.04	1.80	2.20	1.83	2.36	1.85	2.55	1.85	2.60	1.95
35	1.57	1.30	1.73	1.60	1.89	1.64	2.04	1.80	2.20	1.83	2.36	1.85	2.50	1.83	2.55	1.93
37	1.57	1.30	1.73	1.60	1.89	1.64	2.04	1.80	2.20	1.83	2.35	1.85	2.44	1.81	2.49	1.92
40	1.57	1.30	1.73	1.60	1.89	1.64	2.04	1.80	2.20	1.83	2.26	1.81	2.36	1.78	2.40	1.89
43	1.57	1.30	1.73	1.60	1.89	1.64	2.04	1.80	2.14	1.80	2.18	1.78	2.27	1.75	2.32	1.86

■ MODEL : AS∗E09

Outdoor temperature	Indoor temperature															
	20℃CDB / 15℃CWB		23℃CDB / 16℃CWB		24℃CDB / 17℃CWB		26℃CDB / 18℃CWB		27℃CDB / 19℃CWB		28℃CDB / 20℃CWB		30℃CDB / 22℃CWB		32℃CDB / 23℃CWB	
(℃DB)	TC	SHC	TC	SHC	TC	SHC	TC	SHC	TC	SHC	TC	SHC	TC	SHC	TC	SHC
10	2.00	1.56	2.20	1.91	2.40	1.96	2.60	2.14	2.80	2.18	3.00	2.22	3.40	2.27	3.60	2.43
15	2.00	1.56	2.20	1.91	2.40	1.96	2.60	2.14	2.80	2.18	3.00	2.22	3.40	2.27	3.60	2.43
21	2.00	1.56	2.20	1.91	2.40	1.96	2.60	2.14	2.80	2.18	3.00	2.22	3.40	2.27	3.60	2.43
23	2.00	1.56	2.20	1.91	2.40	1.96	2.60	2.14	2.80	2.18	3.00	2.22	3.40	2.27	3.60	2.43
25	2.00	1.56	2.20	1.91	2.40	1.96	2.60	2.14	2.80	2.18	3.00	2.22	3.40	2.27	3.57	2.42
27	2.00	1.56	2.20	1.91	2.40	1.96	2.60	2.14	2.80	2.18	3.00	2.22	3.40	2.27	3.51	2.40
30	2.00	1.56	2.20	1.91	2.40	1.96	2.60	2.14	2.80	2.18	3.00	2.22	3.35	2.25	3.41	2.36
33	2.00	1.56	2.20	1.91	2.40	1.96	2.60	2.14	2.80	2.18	3.00	2.22	3.25	2.21	3.31	2.33
35	2.00	1.56	2.20	1.91	2.40	1.96	2.60	2.14	2.80	2.18	3.00	2.22	3.18	2.19	3.24	2.30
37	2.00	1.56	2.20	1.91	2.40	1.96	2.60	2.14	2.80	2.18	2.99	2.21	3.11	2.16	3.17	2.28
40	2.00	1.56	2.20	1.91	2.40	1.96	2.60	2.14	2.80	2.18	2.88	2.17	3.00	2.12	3.06	2.24
43	2.00	1.56	2.20	1.91	2.40	1.96	2.60	2.14	2.72	2.15	2.77	2.13	2.89	2.08	2.95	2.20

■ MODEL : AS∗E12

Outdoor temperature	Indoor temperature															
	20℃CDB / 15℃CWB		23℃CDB / 16℃CWB		24℃CDB / 17℃CWB		26℃CDB / 18℃CWB		27℃CDB / 19℃CWB		28℃CDB / 20℃CWB		30℃CDB / 22℃CWB		32℃CDB / 23℃CWB	
(℃DB)	TC	SHC	TC	SHC	TC	SHC	TC	SHC	TC	SHC	TC	SHC	TC	SHC	TC	SHC
10	2.57	1.95	2.83	2.38	3.09	2.44	3.34	2.67	3.60	2.72	3.86	2.77	4.37	2.84	4.63	3.04
15	2.57	1.95	2.83	2.38	3.09	2.44	3.34	2.67	3.60	2.72	3.86	2.77	4.37	2.84	4.63	3.04
21	2.57	1.95	2.83	2.38	3.09	2.44	3.34	2.67	3.60	2.72	3.86	2.77	4.37	2.84	4.63	3.04
23	2.57	1.95	2.83	2.38	3.09	2.44	3.34	2.67	3.60	2.72	3.86	2.77	4.37	2.84	4.63	3.04
25	2.57	1.95	2.83	2.38	3.09	2.44	3.34	2.67	3.60	2.72	3.86	2.77	4.37	2.84	4.59	3.02
27	2.57	1.95	2.83	2.38	3.09	2.44	3.34	2.67	3.60	2.72	3.86	2.77	4.37	2.84	4.51	2.99
30	2.57	1.95	2.83	2.38	3.09	2.44	3.34	2.67	3.60	2.72	3.86	2.77	4.31	2.81	4.38	2.95
33	2.57	1.95	2.83	2.38	3.09	2.44	3.34	2.67	3.60	2.72	3.86	2.77	4.18	2.77	4.26	2.90
35	2.57	1.95	2.83	2.38	3.09	2.44	3.34	2.67	3.60	2.72	3.86	2.77	4.09	2.73	4.17	2.87
37	2.57	1.95	2.83	2.38	3.09	2.44	3.34	2.67	3.60	2.72	3.84	2.76	4.00	2.70	4.08	2.84
40	2.57	1.95	2.83	2.38	3.09	2.44	3.34	2.67	3.60	2.72	3.70	2.71	3.86	2.65	3.93	2.79
43	2.57	1.95	2.83	2.38	3.09	2.44	3.34	2.67	3.50	2.68	3.56	2.65	3.72	2.60	3.79	2.74

■ MODEL : AS∗E14

Outdoor temperature	Indoor temperature															
	20℃CDB / 15℃CWB		23℃CDB / 16℃CWB		24℃CDB / 17℃CWB		26℃CDB / 18℃CWB		27℃CDB / 19℃CWB		28℃CDB / 20℃CWB		30℃CDB / 22℃CWB		32℃CDB / 23℃CWB	
(℃DB)	TC	SHC	TC	SHC	TC	SHC	TC	SHC	TC	SHC	TC	SHC	TC	SHC	TC	SHC
10	2.86	2.14	3.14	2.60	3.43	2.67	3.71	2.92	4.00	2.98	4.29	3.03	4.86	3.11	5.14	3.32
15	2.86	2.14	3.14	2.60	3.43	2.67	3.71	2.92	4.00	2.98	4.29	3.03	4.86	3.11	5.14	3.32
21	2.86	2.14	3.14	2.60	3.43	2.67	3.71	2.92	4.00	2.98	4.29	3.03	4.86	3.11	5.14	3.32
23	2.86	2.14	3.14	2.60	3.43	2.67	3.71	2.92	4.00	2.98	4.29	3.03	4.86	3.11	5.14	3.32
25	2.86	2.14	3.14	2.60	3.43	2.67	3.71	2.92	4.00	2.98	4.29	3.03	4.86	3.11	5.10	3.31
27	2.86	2.14	3.14	2.60	3.43	2.67	3.71	2.92	4.00	2.98	4.29	3.03	4.86	3.11	5.01	3.27
30	2.86	2.14	3.14	2.60	3.43	2.67	3.71	2.92	4.00	2.98	4.29	3.03	4.79	3.08	4.87	3.22
33	2.86	2.14	3.14	2.60	3.43	2.67	3.71	2.92	4.00	2.98	4.29	3.03	4.64	3.03	4.73	3.17
35	2.86	2.14	3.14	2.60	3.43	2.67	3.71	2.92	4.00	2.98	4.29	3.03	4.54	2.99	4.63	3.13
37	2.86	2.14	3.14	2.60	3.43	2.67	3.71	2.92	4.00	2.98	4.27	3.02	4.44	2.95	4.53	3.10
40	2.86	2.14	3.14	2.60	3.43	2.67	3.71	2.92	4.00	2.98	4.11	2.96	4.29	2.89	4.37	3.04
43	2.86	2.14	3.14	2.60	3.43	2.67	3.71	2.92	3.89	2.93	3.96	2.90	4.13	2.83	4.21	2.99

TC : Total Capacity kW.

SHC : Sensible Heat Capacity kW.

MODEL SELECTION

2-6-10. WALL MOUNTED TYPE

■ MODEL : AS∗A18

Outdoor temperature	Indoor temperature															
	20℃CDB / 15℃CWB		23℃CDB / 16℃CWB		24℃CDB / 17℃CWB		26℃CDB / 18℃CWB		27℃CDB / 19℃CWB		28℃CDB / 20℃CWB		30℃CDB / 22℃CWB		32℃CDB / 23℃CWB	
(℃CDB)	TC	SHC	TC	SHC	TC	SHC	TC	SHC	TC	SHC	TC	SHC	TC	SHC	TC	SHC
10	3.86	2.87	4.24	3.49	4.63	3.58	5.01	3.92	5.40	4.00	5.79	4.07	6.56	4.18	6.94	4.46
15	3.86	2.87	4.24	3.49	4.63	3.58	5.01	3.92	5.40	4.00	5.79	4.07	6.56	4.18	6.94	4.46
21	3.86	2.87	4.24	3.49	4.63	3.58	5.01	3.92	5.40	4.00	5.79	4.07	6.56	4.18	6.94	4.46
23	3.86	2.87	4.24	3.49	4.63	3.58	5.01	3.92	5.40	4.00	5.79	4.07	6.56	4.18	6.94	4.46
25	3.86	2.87	4.24	3.49	4.63	3.58	5.01	3.92	5.40	4.00	5.79	4.07	6.56	4.18	6.89	4.44
27	3.86	2.87	4.24	3.49	4.63	3.58	5.01	3.92	5.40	4.00	5.79	4.07	6.56	4.18	6.77	4.40
30	3.86	2.87	4.24	3.49	4.63	3.58	5.01	3.92	5.40	4.00	5.79	4.07	6.46	4.14	6.58	4.33
33	3.86	2.87	4.24	3.49	4.63	3.58	5.01	3.92	5.40	4.00	5.79	4.07	6.27	4.06	6.38	4.26
35	3.86	2.87	4.24	3.49	4.63	3.58	5.01	3.92	5.40	4.00	5.79	4.07	6.13	4.01	6.25	4.21
37	3.86	2.87	4.24	3.49	4.63	3.58	5.01	3.92	5.40	4.00	5.77	4.06	6.00	3.96	6.11	4.16
40	3.86	2.87	4.24	3.49	4.63	3.58	5.01	3.92	5.40	4.00	5.55	3.97	5.79	3.88	5.90	4.08
43	3.86	2.87	4.24	3.49	4.63	3.58	5.01	3.92	5.25	3.93	5.34	3.89	5.57	3.80	5.69	4.01

■ MODEL : AS∗A24

Outdoor temperature	Indoor temperature															
	20℃CDB / 15℃CWB		23℃CDB / 16℃CWB		24℃CDB / 17℃CWB		26℃CDB / 18℃CWB		27℃CDB / 19℃CWB		28℃CDB / 20℃CWB		30℃CDB / 22℃CWB		32℃CDB / 23℃CWB	
(℃CDB)	TC	SHC	TC	SHC	TC	SHC	TC	SHC	TC	SHC	TC	SHC	TC	SHC	TC	SHC
10	4.93	3.60	5.42	4.35	5.91	4.48	6.41	4.89	6.90	5.00	7.39	5.09	8.38	5.23	8.87	5.58
15	4.93	3.60	5.42	4.35	5.91	4.48	6.41	4.89	6.90	5.00	7.39	5.09	8.38	5.23	8.87	5.58
21	4.93	3.60	5.42	4.35	5.91	4.48	6.41	4.89	6.90	5.00	7.39	5.09	8.38	5.23	8.87	5.58
23	4.93	3.60	5.42	4.35	5.91	4.48	6.41	4.89	6.90	5.00	7.39	5.09	8.38	5.23	8.87	5.58
25	4.93	3.60	5.42	4.35	5.91	4.48	6.41	4.89	6.90	5.00	7.39	5.09	8.38	5.23	8.80	5.56
27	4.93	3.60	5.42	4.35	5.91	4.48	6.41	4.89	6.90	5.00	7.39	5.09	8.38	5.23	8.65	5.50
30	4.93	3.60	5.42	4.35	5.91	4.48	6.41	4.89	6.90	5.00	7.39	5.09	8.26	5.18	8.40	5.41
33	4.93	3.60	5.42	4.35	5.91	4.48	6.41	4.89	6.90	5.00	7.39	5.09	8.01	5.08	8.16	5.31
35	4.93	3.60	5.42	4.35	5.91	4.48	6.41	4.89	6.90	5.00	7.39	5.09	7.84	5.02	7.98	5.25
37	4.93	3.60	5.42	4.35	5.91	4.48	6.41	4.89	6.90	5.00	7.37	5.07	7.66	4.95	7.81	5.19
40	4.93	3.60	5.42	4.35	5.91	4.48	6.41	4.89	6.90	5.00	7.10	4.96	7.39	4.85	7.54	5.09
43	4.93	3.60	5.42	4.35	5.91	4.48	6.41	4.89	6.70	4.91	6.83	4.85	7.12	4.75	7.27	4.99

■ MODEL : AS∗A30

Outdoor temperature	Indoor temperature															
	20℃CDB / 15℃CWB		23℃CDB / 16℃CWB		24℃CDB / 17℃CWB		26℃CDB / 18℃CWB		27℃CDB / 19℃CWB		28℃CDB / 20℃CWB		30℃CDB / 22℃CWB		32℃CDB / 23℃CWB	
(℃CDB)	TC	SHC	TC	SHC	TC	SHC	TC	SHC	TC	SHC	TC	SHC	TC	SHC	TC	SHC
10	5.71	4.06	6.29	4.88	6.86	5.03	7.43	5.49	8.00	5.62	8.57	5.72	9.71	5.90	10.3	6.29
15	5.71	4.06	6.29	4.88	6.86	5.03	7.43	5.49	8.00	5.62	8.57	5.72	9.71	5.90	10.3	6.29
21	5.71	4.06	6.29	4.88	6.86	5.03	7.43	5.49	8.00	5.62	8.57	5.72	9.71	5.90	10.3	6.29
23	5.71	4.06	6.29	4.88	6.86	5.03	7.43	5.49	8.00	5.62	8.57	5.72	9.71	5.90	10.3	6.29
25	5.71	4.06	6.29	4.88	6.86	5.03	7.43	5.49	8.00	5.62	8.57	5.72	9.71	5.90	10.2	6.26
27	5.71	4.06	6.29	4.88	6.86	5.03	7.43	5.49	8.00	5.62	8.57	5.72	9.71	5.90	10.0	6.19
30	5.71	4.06	6.29	4.88	6.86	5.03	7.43	5.49	8.00	5.62	8.57	5.72	9.57	5.84	9.74	6.08
33	5.71	4.06	6.29	4.88	6.86	5.03	7.43	5.49	8.00	5.62	8.57	5.72	9.29	5.73	9.46	5.97
35	5.71	4.06	6.29	4.88	6.86	5.03	7.43	5.49	8.00	5.62	8.57	5.72	9.09	5.65	9.26	5.89
37	5.71	4.06	6.29	4.88	6.86	5.03	7.43	5.49	8.00	5.62	8.54	5.71	8.89	5.57	9.06	5.81
40	5.71	4.06	6.29	4.88	6.86	5.03	7.43	5.49	8.00	5.62	8.23	5.58	8.57	5.45	8.74	5.70
43	5.71	4.06	6.29	4.88	6.86	5.03	7.43	5.49	7.77	5.52	7.91	5.45	8.26	5.32	8.43	5.58

TC : Total Capacity kW.

SHC : Sensible Heat Capacity kW.

MODEL SELECTION

2-6-11. CEILING WALL TYPE (1/2)

■ MODEL : AW∗A07

Outdoor temperature	Indoor temperature															
	20℃CDB / 15℃CWB		23℃CDB / 16℃CWB		24℃CDB / 17℃CWB		26℃CDB / 18℃CWB		27℃CDB / 19℃CWB		28℃CDB / 20℃CWB		30℃CDB / 22℃CWB		32℃CDB / 23℃CWB	
(℃CDB)	TC	SHC	TC	SHC	TC	SHC	TC	SHC	TC	SHC	TC	SHC	TC	SHC	TC	SHC
10	1.57	1.22	1.73	1.49	1.89	1.53	2.04	1.67	2.20	1.70	2.36	1.73	2.67	1.77	2.83	1.90
15	1.57	1.22	1.73	1.49	1.89	1.53	2.04	1.67	2.20	1.70	2.36	1.73	2.67	1.77	2.83	1.90
21	1.57	1.22	1.73	1.49	1.89	1.53	2.04	1.67	2.20	1.70	2.36	1.73	2.67	1.77	2.83	1.90
23	1.57	1.22	1.73	1.49	1.89	1.53	2.04	1.67	2.20	1.70	2.36	1.73	2.67	1.77	2.83	1.90
25	1.57	1.22	1.73	1.49	1.89	1.53	2.04	1.67	2.20	1.70	2.36	1.73	2.67	1.77	2.81	1.89
27	1.57	1.22	1.73	1.49	1.89	1.53	2.04	1.67	2.20	1.70	2.36	1.73	2.67	1.77	2.76	1.87
30	1.57	1.22	1.73	1.49	1.89	1.53	2.04	1.67	2.20	1.70	2.36	1.73	2.63	1.76	2.68	1.85
33	1.57	1.22	1.73	1.49	1.89	1.53	2.04	1.67	2.20	1.70	2.36	1.73	2.55	1.73	2.60	1.82
35	1.57	1.22	1.73	1.49	1.89	1.53	2.04	1.67	2.20	1.70	2.36	1.73	2.50	1.71	2.55	1.80
37	1.57	1.22	1.73	1.49	1.89	1.53	2.04	1.67	2.20	1.70	2.35	1.73	2.44	1.69	2.49	1.78
40	1.57	1.22	1.73	1.49	1.89	1.53	2.04	1.67	2.20	1.70	2.26	1.69	2.36	1.66	2.40	1.75
43	1.57	1.22	1.73	1.49	1.89	1.53	2.04	1.67	2.14	1.68	2.18	1.66	2.27	1.63	2.32	1.72

■ MODEL : AW∗A09

Outdoor temperature	Indoor temperature															
	20℃CDB / 15℃CWB		23℃CDB / 16℃CWB		24℃CDB / 17℃CWB		26℃CDB / 18℃CWB		27℃CDB / 19℃CWB		28℃CDB / 20℃CWB		30℃CDB / 22℃CWB		32℃CDB / 23℃CWB	
(℃CDB)	TC	SHC	TC	SHC	TC	SHC	TC	SHC	TC	SHC	TC	SHC	TC	SHC	TC	SHC
10	2.00	1.55	2.20	1.89	2.40	1.94	2.60	2.12	2.80	2.16	3.00	2.20	3.40	2.25	3.60	2.41
15	2.00	1.55	2.20	1.89	2.40	1.94	2.60	2.12	2.80	2.16	3.00	2.20	3.40	2.25	3.60	2.41
21	2.00	1.55	2.20	1.89	2.40	1.94	2.60	2.12	2.80	2.16	3.00	2.20	3.40	2.25	3.60	2.41
23	2.00	1.55	2.20	1.89	2.40	1.94	2.60	2.12	2.80	2.16	3.00	2.20	3.40	2.25	3.60	2.41
25	2.00	1.55	2.20	1.89	2.40	1.94	2.60	2.12	2.80	2.16	3.00	2.20	3.40	2.25	3.57	2.40
27	2.00	1.55	2.20	1.89	2.40	1.94	2.60	2.12	2.80	2.16	3.00	2.20	3.40	2.25	3.51	2.38
30	2.00	1.55	2.20	1.89	2.40	1.94	2.60	2.12	2.80	2.16	3.00	2.20	3.35	2.23	3.41	2.34
33	2.00	1.55	2.20	1.89	2.40	1.94	2.60	2.12	2.80	2.16	3.00	2.20	3.25	2.19	3.31	2.31
35	2.00	1.55	2.20	1.89	2.40	1.94	2.60	2.12	2.80	2.16	3.00	2.20	3.18	2.17	3.24	2.28
37	2.00	1.55	2.20	1.89	2.40	1.94	2.60	2.12	2.80	2.16	2.99	2.19	3.11	2.14	3.17	2.26
40	2.00	1.55	2.20	1.89	2.40	1.94	2.60	2.12	2.80	2.16	2.88	2.15	3.00	2.10	3.06	2.22
43	2.00	1.55	2.20	1.89	2.40	1.94	2.60	2.12	2.72	2.13	2.77	2.11	2.89	2.06	2.95	2.18

■ MODEL : AW∗A12

Outdoor temperature	Indoor temperature															
	20℃CDB / 15℃CWB		23℃CDB / 16℃CWB		24℃CDB / 17℃CWB		26℃CDB / 18℃CWB		27℃CDB / 19℃CWB		28℃CDB / 20℃CWB		30℃CDB / 22℃CWB		32℃CDB / 23℃CWB	
(℃CDB)	TC	SHC	TC	SHC	TC	SHC	TC	SHC	TC	SHC	TC	SHC	TC	SHC	TC	SHC
10	2.57	1.97	2.83	2.40	3.09	2.46	3.34	2.69	3.60	2.74	3.86	2.79	4.37	2.86	4.63	3.06
15	2.57	1.97	2.83	2.40	3.09	2.46	3.34	2.69	3.60	2.74	3.86	2.79	4.37	2.86	4.63	3.06
21	2.57	1.97	2.83	2.40	3.09	2.46	3.34	2.69	3.60	2.74	3.86	2.79	4.37	2.86	4.63	3.06
23	2.57	1.97	2.83	2.40	3.09	2.46	3.34	2.69	3.60	2.74	3.86	2.79	4.37	2.86	4.63	3.06
25	2.57	1.97	2.83	2.40	3.09	2.46	3.34	2.69	3.60	2.74	3.86	2.79	4.37	2.86	4.59	3.04
27	2.57	1.97	2.83	2.40	3.09	2.46	3.34	2.69	3.60	2.74	3.86	2.79	4.37	2.86	4.51	3.02
30	2.57	1.97	2.83	2.40	3.09	2.46	3.34	2.69	3.60	2.74	3.86	2.79	4.31	2.83	4.38	2.97
33	2.57	1.97	2.83	2.40	3.09	2.46	3.34	2.69	3.60	2.74	3.86	2.79	4.18	2.78	4.26	2.92
35	2.57	1.97	2.83	2.40	3.09	2.46	3.34	2.69	3.60	2.74	3.86	2.79	4.09	2.75	4.17	2.89
37	2.57	1.97	2.83	2.40	3.09	2.46	3.34	2.69	3.60	2.74	3.84	2.78	4.00	2.72	4.08	2.86
40	2.57	1.97	2.83	2.40	3.09	2.46	3.34	2.69	3.60	2.74	3.70	2.72	3.86	2.67	3.93	2.81
43	2.57	1.97	2.83	2.40	3.09	2.46	3.34	2.69	3.50	2.70	3.56	2.67	3.72	2.61	3.79	2.76

■ MODEL : AW∗A14

Outdoor temperature	Indoor temperature															
	20℃CDB / 15℃CWB		23℃CDB / 16℃CWB		24℃CDB / 17℃CWB		26℃CDB / 18℃CWB		27℃CDB / 19℃CWB		28℃CDB / 20℃CWB		30℃CDB / 22℃CWB		32℃CDB / 23℃CWB	
(℃CDB)	TC	SHC	TC	SHC	TC	SHC	TC	SHC	TC	SHC	TC	SHC	TC	SHC	TC	SHC
10	3.07	2.29	3.38	2.78	3.69	2.85	3.99	3.12	4.30	3.18	4.61	3.24	5.22	3.32	5.53	3.55
15	3.07	2.29	3.38	2.78	3.69	2.85	3.99	3.12	4.30	3.18	4.61	3.24	5.22	3.32	5.53	3.55
21	3.07	2.29	3.38	2.78	3.69	2.85	3.99	3.12	4.30	3.18	4.61	3.24	5.22	3.32	5.53	3.55
23	3.07	2.29	3.38	2.78	3.69	2.85	3.99	3.12	4.30	3.18	4.61	3.24	5.22	3.32	5.53	3.55
25	3.07	2.29	3.38	2.78	3.69	2.85	3.99	3.12	4.30	3.18	4.61	3.24	5.22	3.32	5.48	3.54
27	3.07	2.29	3.38	2.78	3.69	2.85	3.99	3.12	4.30	3.18	4.61	3.24	5.22	3.32	5.39	3.50
30	3.07	2.29	3.38	2.78	3.69	2.85	3.99	3.12	4.30	3.18	4.61	3.24	5.14	3.29	5.24	3.44
33	3.07	2.29	3.38	2.78	3.69	2.85	3.99	3.12	4.30	3.18	4.61	3.24	4.99	3.23	5.08	3.39
35	3.07	2.29	3.38	2.78	3.69	2.85	3.99	3.12	4.30	3.18	4.61	3.24	4.88	3.19	4.98	3.35
37	3.07	2.29	3.38	2.78	3.69	2.85	3.99	3.12	4.30	3.18	4.59	3.23	4.78	3.15	4.87	3.31
40	3.07	2.29	3.38	2.78	3.69	2.85	3.99	3.12	4.30	3.18	4.42	3.16	4.61	3.09	4.70	3.25
43	3.07	2.29	3.38	2.78	3.69	2.85	3.99	3.12	4.18	3.13	4.25	3.09	4.44	3.03	4.53	3.19

TC : Total Capacity kW.

SHC : Sensible Heat Capacity kW.

MODEL SELECTION

2-6-11. CEILING WALL TYPE (2/2)

■ MODEL : AW∗A18

Outdoor temperature	Indoor temperature															
	20℃CDB / 15℃CWB		23℃CDB / 16℃CWB		24℃CDB / 17℃CWB		26℃CDB / 18℃CWB		27℃CDB / 19℃CWB		28℃CDB / 20℃CWB		30℃CDB / 22℃CWB		32℃CDB / 23℃CWB	
(℃DB)	TC	SHC	TC	SHC	TC	SHC	TC	SHC	TC	SHC	TC	SHC	TC	SHC	TC	SHC
10	3.86	2.82	4.24	3.41	4.63	3.51	5.01	3.83	5.40	3.91	5.79	3.98	6.56	4.09	6.94	4.37
15	3.86	2.82	4.24	3.41	4.63	3.51	5.01	3.83	5.40	3.91	5.79	3.98	6.56	4.09	6.94	4.37
21	3.86	2.82	4.24	3.41	4.63	3.51	5.01	3.83	5.40	3.91	5.79	3.98	6.56	4.09	6.94	4.37
23	3.86	2.82	4.24	3.41	4.63	3.51	5.01	3.83	5.40	3.91	5.79	3.98	6.56	4.09	6.94	4.37
25	3.86	2.82	4.24	3.41	4.63	3.51	5.01	3.83	5.40	3.91	5.79	3.98	6.56	4.09	6.89	4.35
27	3.86	2.82	4.24	3.41	4.63	3.51	5.01	3.83	5.40	3.91	5.79	3.98	6.56	4.09	6.77	4.31
30	3.86	2.82	4.24	3.41	4.63	3.51	5.01	3.83	5.40	3.91	5.79	3.98	6.46	4.06	6.58	4.23
33	3.86	2.82	4.24	3.41	4.63	3.51	5.01	3.83	5.40	3.91	5.79	3.98	6.27	3.98	6.38	4.16
35	3.86	2.82	4.24	3.41	4.63	3.51	5.01	3.83	5.40	3.91	5.79	3.98	6.13	3.93	6.25	4.11
37	3.86	2.82	4.24	3.41	4.63	3.51	5.01	3.83	5.40	3.91	5.77	3.97	6.00	3.88	6.11	4.06
40	3.86	2.82	4.24	3.41	4.63	3.51	5.01	3.83	5.40	3.91	5.55	3.89	5.79	3.80	5.90	3.98
43	3.86	2.82	4.24	3.41	4.63	3.51	5.01	3.83	5.25	3.85	5.34	3.80	5.57	3.72	5.69	3.91

■ MODEL : AW∗A24

Outdoor temperature	Indoor temperature															
	20℃CDB / 15℃CWB		23℃CDB / 16℃CWB		24℃CDB / 17℃CWB		26℃CDB / 18℃CWB		27℃CDB / 19℃CWB		28℃CDB / 20℃CWB		30℃CDB / 22℃CWB		32℃CDB / 23℃CWB	
(℃DB)	TC	SHC	TC	SHC	TC	SHC	TC	SHC	TC	SHC	TC	SHC	TC	SHC	TC	SHC
10	4.93	3.51	5.42	4.22	5.91	4.35	6.41	4.75	6.90	4.85	7.39	4.94	8.38	5.10	8.87	5.43
15	4.93	3.51	5.42	4.22	5.91	4.35	6.41	4.75	6.90	4.85	7.39	4.94	8.38	5.10	8.87	5.43
21	4.93	3.51	5.42	4.22	5.91	4.35	6.41	4.75	6.90	4.85	7.39	4.94	8.38	5.10	8.87	5.43
23	4.93	3.51	5.42	4.22	5.91	4.35	6.41	4.75	6.90	4.85	7.39	4.94	8.38	5.10	8.87	5.43
25	4.93	3.51	5.42	4.22	5.91	4.35	6.41	4.75	6.90	4.85	7.39	4.94	8.38	5.10	8.80	5.40
27	4.93	3.51	5.42	4.22	5.91	4.35	6.41	4.75	6.90	4.85	7.39	4.94	8.38	5.10	8.65	5.34
30	4.93	3.51	5.42	4.22	5.91	4.35	6.41	4.75	6.90	4.85	7.39	4.94	8.26	5.05	8.40	5.25
33	4.93	3.51	5.42	4.22	5.91	4.35	6.41	4.75	6.90	4.85	7.39	4.94	8.01	4.95	8.16	5.15
35	4.93	3.51	5.42	4.22	5.91	4.35	6.41	4.75	6.90	4.85	7.39	4.94	7.84	4.88	7.98	5.09
37	4.93	3.51	5.42	4.22	5.91	4.35	6.41	4.75	6.90	4.85	7.37	4.93	7.66	4.81	7.81	5.02
40	4.93	3.51	5.42	4.22	5.91	4.35	6.41	4.75	6.90	4.85	7.10	4.82	7.39	4.70	7.54	4.92
43	4.93	3.51	5.42	4.22	5.91	4.35	6.41	4.75	6.70	4.77	6.83	4.70	7.12	4.60	7.27	4.82

■ MODEL : AW∗A30

Outdoor temperature	Indoor temperature															
	20℃CDB / 15℃CWB		23℃CDB / 16℃CWB		24℃CDB / 17℃CWB		26℃CDB / 18℃CWB		27℃CDB / 19℃CWB		28℃CDB / 20℃CWB		30℃CDB / 22℃CWB		32℃CDB / 23℃CWB	
(℃DB)	TC	SHC	TC	SHC	TC	SHC	TC	SHC	TC	SHC	TC	SHC	TC	SHC	TC	SHC
10	5.71	3.94	6.29	4.72	6.86	4.87	7.43	5.31	8.00	5.44	8.57	5.55	9.71	5.74	10.3	6.11
15	5.71	3.94	6.29	4.72	6.86	4.87	7.43	5.31	8.00	5.44	8.57	5.55	9.71	5.74	10.3	6.11
21	5.71	3.94	6.29	4.72	6.86	4.87	7.43	5.31	8.00	5.44	8.57	5.55	9.71	5.74	10.3	6.11
23	5.71	3.94	6.29	4.72	6.86	4.87	7.43	5.31	8.00	5.44	8.57	5.55	9.71	5.74	10.3	6.11
25	5.71	3.94	6.29	4.72	6.86	4.87	7.43	5.31	8.00	5.44	8.57	5.55	9.71	5.74	10.2	6.07
27	5.71	3.94	6.29	4.72	6.86	4.87	7.43	5.31	8.00	5.44	8.57	5.55	9.71	5.74	10.0	6.00
30	5.71	3.94	6.29	4.72	6.86	4.87	7.43	5.31	8.00	5.44	8.57	5.55	9.57	5.68	9.74	5.89
33	5.71	3.94	6.29	4.72	6.86	4.87	7.43	5.31	8.00	5.44	8.57	5.55	9.29	5.56	9.46	5.77
35	5.71	3.94	6.29	4.72	6.86	4.87	7.43	5.31	8.00	5.44	8.57	5.55	9.09	5.48	9.26	5.69
37	5.71	3.94	6.29	4.72	6.86	4.87	7.43	5.31	8.00	5.44	8.54	5.54	8.89	5.39	9.06	5.61
40	5.71	3.94	6.29	4.72	6.86	4.87	7.43	5.31	8.00	5.44	8.23	5.40	8.57	5.27	8.74	5.49
43	5.71	3.94	6.29	4.72	6.86	4.87	7.43	5.31	7.77	5.34	7.91	5.27	8.26	5.14	8.43	5.37

TC : Total Capacity kW.

SHC : Sensible Heat Capacity kW.

MODEL SELECTION

2-7. CAPACITY TABLE HEATING (INDOOR UNIT)

2-7-1. COMPACT CASSETTE TYPE (1/2)

■ MODEL : AUXB07

Outdoor Temperature		Indoor temperature						
		16°CDB	18°CDB	20°CDB	21°CDB	22°CDB	24°CDB	26°CDB
(°CDB)	(°CWB)	TC	TC	TC	TC	TC	TC	TC
-19.3	-20.0	1.48	1.48	1.47	1.47	1.46	1.45	1.45
-15.0	-16.0	1.64	1.63	1.63	1.62	1.62	1.61	1.60
-12.0	-13.0	1.78	1.77	1.75	1.75	1.75	1.74	1.72
-9.0	-10.0	1.92	1.90	1.90	1.89	1.88	1.87	1.86
-7.0	-8.0	2.02	2.01	1.99	1.98	1.98	1.96	1.94
-5.0	-6.0	2.12	2.10	2.09	2.08	2.07	2.06	2.00
-3.0	-4.0	2.22	2.21	2.19	2.18	2.17	2.16	2.00
-1.0	-2.0	2.33	2.32	2.29	2.29	2.28	2.17	2.00
0.0	-1.0	2.39	2.37	2.35	2.34	2.33	2.17	2.00
2.0	1.0	2.49	2.48	2.45	2.41	2.33	2.17	2.00
5.0	4.0	2.67	2.64	2.50	2.41	2.33	2.17	2.00
7.0	6.0	2.78	2.67	2.50	2.41	2.33	2.17	2.00
9.0	7.8	2.83	2.67	2.50	2.41	2.33	2.17	2.00
12.0	10.6	2.83	2.67	2.50	2.41	2.33	2.17	2.00
15.0	13.5	2.83	2.67	2.50	2.41	2.33	2.17	2.00

■ MODEL : AUXB09

Outdoor Temperature		Indoor temperature						
		16°CDB	18°CDB	20°CDB	21°CDB	22°CDB	24°CDB	26°CDB
(°CDB)	(°CWB)	TC	TC	TC	TC	TC	TC	TC
-19.3	-20.0	1.90	1.89	1.88	1.88	1.87	1.86	1.86
-15.0	-16.0	2.10	2.09	2.08	2.07	2.07	2.06	2.05
-12.0	-13.0	2.28	2.27	2.25	2.25	2.23	2.22	2.20
-9.0	-10.0	2.46	2.44	2.43	2.42	2.41	2.40	2.38
-7.0	-8.0	2.58	2.57	2.55	2.54	2.53	2.51	2.49
-5.0	-6.0	2.71	2.69	2.67	2.66	2.65	2.63	2.56
-3.0	-4.0	2.84	2.82	2.80	2.79	2.78	2.76	2.56
-1.0	-2.0	2.99	2.97	2.94	2.93	2.92	2.77	2.56
0.0	-1.0	3.06	3.03	3.01	3.00	2.98	2.77	2.56
2.0	1.0	3.19	3.17	3.14	3.09	2.99	2.77	2.56
5.0	4.0	3.41	3.38	3.20	3.09	2.99	2.77	2.56
7.0	6.0	3.56	3.41	3.20	3.09	2.99	2.77	2.56
9.0	7.8	3.63	3.41	3.20	3.09	2.99	2.77	2.56
12.0	10.6	3.63	3.41	3.20	3.09	2.99	2.77	2.56
15.0	13.5	3.63	3.41	3.20	3.09	2.99	2.77	2.56

■ MODEL : AUXB12

Outdoor Temperature		Indoor temperature						
		16°CDB	18°CDB	20°CDB	21°CDB	22°CDB	24°CDB	26°CDB
(°CDB)	(°CWB)	TC	TC	TC	TC	TC	TC	TC
-19.3	-20.0	2.43	2.42	2.41	2.41	2.39	2.38	2.38
-15.0	-16.0	2.69	2.68	2.67	2.66	2.66	2.64	2.63
-12.0	-13.0	2.92	2.90	2.88	2.88	2.86	2.85	2.82
-9.0	-10.0	3.15	3.12	3.11	3.10	3.08	3.07	3.05
-7.0	-8.0	3.31	3.29	3.27	3.25	3.24	3.21	3.19
-5.0	-6.0	3.48	3.45	3.42	3.41	3.40	3.37	3.28
-3.0	-4.0	3.64	3.62	3.59	3.58	3.57	3.54	3.28
-1.0	-2.0	3.83	3.80	3.76	3.75	3.74	3.55	3.28
0.0	-1.0	3.92	3.88	3.85	3.84	3.81	3.55	3.28
2.0	1.0	4.09	4.06	4.02	3.96	3.83	3.55	3.28
5.0	4.0	4.37	4.33	4.10	3.96	3.83	3.55	3.28
7.0	6.0	4.56	4.37	4.10	3.96	3.83	3.55	3.28
9.0	7.8	4.65	4.37	4.10	3.96	3.83	3.55	3.28
12.0	10.6	4.65	4.37	4.10	3.96	3.83	3.55	3.28
15.0	13.5	4.65	4.37	4.10	3.96	3.83	3.55	3.28

TC : Total Capacity kW.

MODEL SELECTION

2-7-1. COMPACT CASSETTE TYPE (2/2)

■ MODEL : AUXB14

Outdoor Temperature		Indoor temperature						
		16°CDB	18°CDB	20°CDB	21°CDB	22°CDB	24°CDB	26°CDB
(°CDB)	(°CWB)	TC	TC	TC	TC	TC	TC	TC
-19.3	-20.0	2.67	2.66	2.64	2.64	2.63	2.61	2.61
-15.0	-16.0	2.96	2.94	2.93	2.91	2.91	2.90	2.89
-12.0	-13.0	3.20	3.19	3.16	3.16	3.14	3.13	3.10
-9.0	-10.0	3.46	3.43	3.41	3.40	3.39	3.37	3.34
-7.0	-8.0	3.63	3.61	3.59	3.57	3.56	3.53	3.50
-5.0	-6.0	3.81	3.79	3.76	3.74	3.73	3.70	3.60
-3.0	-4.0	4.00	3.97	3.94	3.93	3.91	3.89	3.60
-1.0	-2.0	4.20	4.17	4.13	4.11	4.10	3.90	3.60
0.0	-1.0	4.30	4.26	4.23	4.21	4.19	3.90	3.60
2.0	1.0	4.49	4.46	4.41	4.34	4.20	3.90	3.60
5.0	4.0	4.80	4.76	4.50	4.34	4.20	3.90	3.60
7.0	6.0	5.00	4.80	4.50	4.34	4.20	3.90	3.60
9.0	7.8	5.10	4.80	4.50	4.34	4.20	3.90	3.60
12.0	10.6	5.10	4.80	4.50	4.34	4.20	3.90	3.60
15.0	13.5	5.10	4.80	4.50	4.34	4.20	3.90	3.60

■ MODEL : AUXB18

Outdoor Temperature		Indoor temperature						
		16°CDB	18°CDB	20°CDB	21°CDB	22°CDB	24°CDB	26°CDB
(°CDB)	(°CWB)	TC	TC	TC	TC	TC	TC	TC
-19.3	-20.0	3.24	3.22	3.20	3.20	3.18	3.17	3.17
-15.0	-16.0	3.58	3.56	3.55	3.53	3.53	3.51	3.49
-12.0	-13.0	3.88	3.86	3.82	3.82	3.81	3.79	3.75
-9.0	-10.0	4.19	4.15	4.14	4.12	4.10	4.08	4.05
-7.0	-8.0	4.39	4.38	4.34	4.33	4.31	4.27	4.24
-5.0	-6.0	4.62	4.58	4.55	4.53	4.52	4.48	4.36
-3.0	-4.0	4.84	4.81	4.78	4.76	4.74	4.71	4.36
-1.0	-2.0	5.09	5.05	5.00	4.98	4.97	4.72	4.36
0.0	-1.0	5.21	5.16	5.12	5.10	5.07	4.72	4.36
2.0	1.0	5.43	5.40	5.35	5.26	5.09	4.72	4.36
5.0	4.0	5.81	5.76	5.45	5.26	5.09	4.72	4.36
7.0	6.0	6.06	5.81	5.45	5.26	5.09	4.72	4.36
9.0	7.8	6.18	5.81	5.45	5.26	5.09	4.72	4.36
12.0	10.6	6.18	5.81	5.45	5.26	5.09	4.72	4.36
15.0	13.5	6.18	5.81	5.45	5.26	5.09	4.72	4.36

TC : Total Capacity kW.

MODEL SELECTION

2-7-2. CASSETTE TYPE (1/2)

■ MODEL : AU∗A20

Outdoor Temperature		Indoor temperature						
		16°CDB	18°CDB	20°CDB	21°CDB	22°CDB	24°CDB	26°CDB
(°CDB)	(°CWB)	TC	TC	TC	TC	TC	TC	TC
-19.3	-20.0	3.44	3.42	3.41	3.41	3.39	3.37	3.37
-15.0	-16.0	3.81	3.79	3.77	3.76	3.76	3.74	3.72
-12.0	-13.0	4.12	4.11	4.07	4.07	4.05	4.03	4.00
-9.0	-10.0	4.46	4.42	4.40	4.38	4.36	4.35	4.31
-7.0	-8.0	4.68	4.66	4.62	4.60	4.58	4.55	4.51
-5.0	-6.0	4.92	4.88	4.84	4.82	4.81	4.77	4.64
-3.0	-4.0	5.16	5.12	5.08	5.06	5.05	5.01	4.64
-1.0	-2.0	5.41	5.38	5.32	5.30	5.28	5.03	4.64
0.0	-1.0	5.54	5.49	5.45	5.43	5.39	5.03	4.64
2.0	1.0	5.78	5.74	5.69	5.60	5.41	5.03	4.64
5.0	4.0	6.19	6.13	5.80	5.60	5.41	5.03	4.64
7.0	6.0	6.44	6.19	5.80	5.60	5.41	5.03	4.64
9.0	7.8	6.57	6.19	5.80	5.60	5.41	5.03	4.64
12.0	10.6	6.57	6.19	5.80	5.60	5.41	5.03	4.64
15.0	13.5	6.57	6.19	5.80	5.60	5.41	5.03	4.64

■ MODEL : AU∗A25

Outdoor Temperature		Indoor temperature						
		16°CDB	18°CDB	20°CDB	21°CDB	22°CDB	24°CDB	26°CDB
(°CDB)	(°CWB)	TC	TC	TC	TC	TC	TC	TC
-19.3	-20.0	4.66	4.64	4.61	4.61	4.59	4.56	4.56
-15.0	-16.0	5.16	5.13	5.11	5.08	5.08	5.06	5.03
-12.0	-13.0	5.58	5.56	5.51	5.51	5.48	5.46	5.41
-9.0	-10.0	6.03	5.98	5.96	5.93	5.91	5.88	5.83
-7.0	-8.0	6.33	6.30	6.26	6.23	6.21	6.16	6.11
-5.0	-6.0	6.65	6.60	6.55	6.53	6.50	6.45	6.28
-3.0	-4.0	6.98	6.93	6.88	6.85	6.83	6.78	6.28
-1.0	-2.0	7.33	7.28	7.20	7.18	7.15	6.80	6.28
0.0	-1.0	7.50	7.43	7.38	7.35	7.30	6.80	6.28
2.0	1.0	7.83	7.78	7.70	7.58	7.33	6.80	6.28
5.0	4.0	8.37	8.30	7.85	7.58	7.33	6.80	6.28
7.0	6.0	8.72	8.37	7.85	7.58	7.33	6.80	6.28
9.0	7.8	8.90	8.37	7.85	7.58	7.33	6.80	6.28
12.0	10.6	8.90	8.37	7.85	7.58	7.33	6.80	6.28
15.0	13.5	8.90	8.37	7.85	7.58	7.33	6.80	6.28

■ MODEL : AU∗A30

Outdoor Temperature		Indoor temperature						
		16°CDB	18°CDB	20°CDB	21°CDB	22°CDB	24°CDB	26°CDB
(°CDB)	(°CWB)	TC	TC	TC	TC	TC	TC	TC
-19.3	-20.0	5.40	5.37	5.34	5.34	5.32	5.29	5.29
-15.0	-16.0	5.98	5.95	5.92	5.89	5.89	5.86	5.84
-12.0	-13.0	6.47	6.44	6.38	6.38	6.36	6.33	6.27
-9.0	-10.0	6.99	6.93	6.90	6.88	6.85	6.82	6.76
-7.0	-8.0	7.34	7.31	7.25	7.22	7.19	7.14	7.08
-5.0	-6.0	7.71	7.66	7.60	7.57	7.54	7.48	7.28
-3.0	-4.0	8.09	8.03	7.97	7.94	7.92	7.86	7.28
-1.0	-2.0	8.49	8.44	8.35	8.32	8.29	7.89	7.28
0.0	-1.0	8.70	8.61	8.55	8.52	8.46	7.89	7.28
2.0	1.0	9.07	9.01	8.93	8.78	8.49	7.89	7.28
5.0	4.0	9.71	9.62	9.10	8.78	8.49	7.89	7.28
7.0	6.0	10.1	9.71	9.10	8.78	8.49	7.89	7.28
9.0	7.8	10.3	9.71	9.10	8.78	8.49	7.89	7.28
12.0	10.6	10.3	9.71	9.10	8.78	8.49	7.89	7.28
15.0	13.5	10.3	9.71	9.10	8.78	8.49	7.89	7.28

TC : Total Capacity kW.

MODEL SELECTION

2-7-2. CASSETTE TYPE (2/2)

■ MODEL : AU∗A36

Outdoor Temperature		Indoor temperature						
		16°CDB	18°CDB	20°CDB	21°CDB	22°CDB	24°CDB	26°CDB
(°CDB)	(°CWB)	TC	TC	TC	TC	TC	TC	TC
-19.3	-20.0	7.54	7.50	7.46	7.46	7.42	7.38	7.38
-15.0	-16.0	8.35	8.31	8.27	8.22	8.22	8.18	8.14
-12.0	-13.0	9.03	8.99	8.91	8.91	8.87	8.83	8.75
-9.0	-10.0	9.76	9.68	9.64	9.60	9.56	9.51	9.43
-7.0	-8.0	10.2	10.2	10.1	10.1	10.0	9.96	9.88
-5.0	-6.0	10.8	10.7	10.6	10.6	10.5	10.4	10.2
-3.0	-4.0	11.3	11.2	11.1	11.1	11.0	11.0	10.2
-1.0	-2.0	11.9	11.8	11.7	11.6	11.6	11.0	10.2
0.0	-1.0	12.1	12.0	11.9	11.9	11.8	11.0	10.2
2.0	1.0	12.7	12.6	12.5	12.3	11.9	11.0	10.2
5.0	4.0	13.5	13.4	12.7	12.3	11.9	11.0	10.2
7.0	6.0	14.1	13.5	12.7	12.3	11.9	11.0	10.2
9.0	7.8	14.4	13.5	12.7	12.3	11.9	11.0	10.2
12.0	10.6	14.4	13.5	12.7	12.3	11.9	11.0	10.2
15.0	13.5	14.4	13.5	12.7	12.3	11.9	11.0	10.2

■ MODEL : AU∗A45

Outdoor Temperature		Indoor temperature						
		16°CDB	18°CDB	20°CDB	21°CDB	22°CDB	24°CDB	26°CDB
(°CDB)	(°CWB)	TC	TC	TC	TC	TC	TC	TC
-19.3	-20.0	8.13	8.09	8.05	8.05	8.00	7.96	7.96
-15.0	-16.0	9.00	8.96	8.92	8.87	8.87	8.83	8.79
-12.0	-13.0	9.74	9.70	9.61	9.61	9.57	9.52	9.44
-9.0	-10.0	10.5	10.4	10.4	10.4	10.3	10.3	10.2
-7.0	-8.0	11.0	11.0	10.9	10.9	10.8	10.7	10.7
-5.0	-6.0	11.6	11.5	11.4	11.4	11.4	11.3	11.0
-3.0	-4.0	12.2	12.1	12.0	12.0	11.9	11.8	11.0
-1.0	-2.0	12.8	12.7	12.6	12.5	12.5	11.9	11.0
0.0	-1.0	13.1	13.0	12.9	12.8	12.7	11.9	11.0
2.0	1.0	13.7	13.6	13.4	13.2	12.8	11.9	11.0
5.0	4.0	14.6	14.5	13.7	13.2	12.8	11.9	11.0
7.0	6.0	15.2	14.6	13.7	13.2	12.8	11.9	11.0
9.0	7.8	15.5	14.6	13.7	13.2	12.8	11.9	11.0
12.0	10.6	15.5	14.6	13.7	13.2	12.8	11.9	11.0
15.0	13.5	15.5	14.6	13.7	13.2	12.8	11.9	11.0

■ MODEL : AU∗A54

Outdoor Temperature		Indoor temperature						
		16°CDB	18°CDB	20°CDB	21°CDB	22°CDB	24°CDB	26°CDB
(°CDB)	(°CWB)	TC	TC	TC	TC	TC	TC	TC
-19.3	-20.0	9.38	9.33	9.28	9.28	9.23	9.18	9.18
-15.0	-16.0	10.4	10.3	10.3	10.2	10.2	10.2	10.1
-12.0	-13.0	11.2	11.2	11.1	11.1	11.0	11.0	10.9
-9.0	-10.0	12.1	12.0	12.0	11.9	11.9	11.8	11.7
-7.0	-8.0	12.7	12.7	12.6	12.5	12.5	12.4	12.3
-5.0	-6.0	13.4	13.3	13.2	13.1	13.1	13.0	12.6
-3.0	-4.0	14.0	13.9	13.8	13.8	13.7	13.6	12.6
-1.0	-2.0	14.7	14.6	14.5	14.4	14.4	13.7	12.6
0.0	-1.0	15.1	14.9	14.8	14.8	14.7	13.7	12.6
2.0	1.0	15.7	15.6	15.5	15.2	14.7	13.7	12.6
5.0	4.0	16.9	16.7	15.8	15.2	14.7	13.7	12.6
7.0	6.0	17.6	16.9	15.8	15.2	14.7	13.7	12.6
9.0	7.8	17.9	16.9	15.8	15.2	14.7	13.7	12.6
12.0	10.6	17.9	16.9	15.8	15.2	14.7	13.7	12.6
15.0	13.5	17.9	16.9	15.8	15.2	14.7	13.7	12.6

TC : Total Capacity kW.

MODEL SELECTION

2-7-3. COMPACT DUCT TYPE (1/2)

■ MODEL : ARXB07

Outdoor Temperature		Indoor temperature						
		16°CDB	18°CDB	20°CDB	21°CDB	22°CDB	24°CDB	26°CDB
(°CDB)	(°CWB)	TC	TC	TC	TC	TC	TC	TC
-19.3	-20.0	1.48	1.48	1.47	1.47	1.46	1.45	1.45
-15.0	-16.0	1.64	1.63	1.63	1.62	1.62	1.61	1.60
-12.0	-13.0	1.78	1.77	1.75	1.75	1.75	1.74	1.72
-9.0	-10.0	1.92	1.90	1.90	1.89	1.88	1.87	1.86
-7.0	-8.0	2.02	2.01	1.99	1.98	1.98	1.96	1.94
-5.0	-6.0	2.12	2.10	2.09	2.08	2.07	2.06	2.00
-3.0	-4.0	2.22	2.21	2.19	2.18	2.17	2.16	2.00
-1.0	-2.0	2.33	2.32	2.29	2.29	2.28	2.17	2.00
0.0	-1.0	2.39	2.37	2.35	2.34	2.33	2.17	2.00
2.0	1.0	2.49	2.48	2.45	2.41	2.33	2.17	2.00
5.0	4.0	2.67	2.64	2.50	2.41	2.33	2.17	2.00
7.0	6.0	2.78	2.67	2.50	2.41	2.33	2.17	2.00
9.0	7.8	2.83	2.67	2.50	2.41	2.33	2.17	2.00
12.0	10.6	2.83	2.67	2.50	2.41	2.33	2.17	2.00
15.0	13.5	2.83	2.67	2.50	2.41	2.33	2.17	2.00

■ MODEL : ARXB09

Outdoor Temperature		Indoor temperature						
		16°CDB	18°CDB	20°CDB	21°CDB	22°CDB	24°CDB	26°CDB
(°CDB)	(°CWB)	TC	TC	TC	TC	TC	TC	TC
-19.3	-20.0	1.90	1.89	1.88	1.88	1.87	1.86	1.86
-15.0	-16.0	2.10	2.09	2.08	2.07	2.07	2.06	2.05
-12.0	-13.0	2.28	2.27	2.25	2.25	2.23	2.22	2.20
-9.0	-10.0	2.46	2.44	2.43	2.42	2.41	2.40	2.38
-7.0	-8.0	2.58	2.57	2.55	2.54	2.53	2.51	2.49
-5.0	-6.0	2.71	2.69	2.67	2.66	2.65	2.63	2.56
-3.0	-4.0	2.84	2.82	2.80	2.79	2.78	2.76	2.56
-1.0	-2.0	2.99	2.97	2.94	2.93	2.92	2.77	2.56
0.0	-1.0	3.06	3.03	3.01	3.00	2.98	2.77	2.56
2.0	1.0	3.19	3.17	3.14	3.09	2.99	2.77	2.56
5.0	4.0	3.41	3.38	3.20	3.09	2.99	2.77	2.56
7.0	6.0	3.56	3.41	3.20	3.09	2.99	2.77	2.56
9.0	7.8	3.63	3.41	3.20	3.09	2.99	2.77	2.56
12.0	10.6	3.63	3.41	3.20	3.09	2.99	2.77	2.56
15.0	13.5	3.63	3.41	3.20	3.09	2.99	2.77	2.56

■ MODEL : ARXB12

Outdoor Temperature		Indoor temperature						
		16°CDB	18°CDB	20°CDB	21°CDB	22°CDB	24°CDB	26°CDB
(°CDB)	(°CWB)	TC	TC	TC	TC	TC	TC	TC
-19.3	-20.0	2.43	2.42	2.41	2.41	2.39	2.38	2.38
-15.0	-16.0	2.69	2.68	2.67	2.66	2.66	2.64	2.63
-12.0	-13.0	2.92	2.90	2.88	2.88	2.86	2.85	2.82
-9.0	-10.0	3.15	3.12	3.11	3.10	3.08	3.07	3.05
-7.0	-8.0	3.31	3.29	3.27	3.25	3.24	3.21	3.19
-5.0	-6.0	3.48	3.45	3.42	3.41	3.40	3.37	3.28
-3.0	-4.0	3.64	3.62	3.59	3.58	3.57	3.54	3.28
-1.0	-2.0	3.83	3.80	3.76	3.75	3.74	3.55	3.28
0.0	-1.0	3.92	3.88	3.85	3.84	3.81	3.55	3.28
2.0	1.0	4.09	4.06	4.02	3.96	3.83	3.55	3.28
5.0	4.0	4.37	4.33	4.10	3.96	3.83	3.55	3.28
7.0	6.0	4.56	4.37	4.10	3.96	3.83	3.55	3.28
9.0	7.8	4.65	4.37	4.10	3.96	3.83	3.55	3.28
12.0	10.6	4.65	4.37	4.10	3.96	3.83	3.55	3.28
15.0	13.5	4.65	4.37	4.10	3.96	3.83	3.55	3.28

TC : Total Capacity kW.

MODEL SELECTION

2-7-3. COMPACT DUCT TYPE (2/2)

■ MODEL : ARXB14

Outdoor Temperature		Indoor temperature						
		16°CDB	18°CDB	20°CDB	21°CDB	22°CDB	24°CDB	26°CDB
(°CDB)	(°CWB)	TC	TC	TC	TC	TC	TC	TC
-19.3	-20.0	2.85	2.83	2.82	2.82	2.80	2.79	2.79
-15.0	-16.0	3.15	3.14	3.12	3.11	3.11	3.09	3.08
-12.0	-13.0	3.41	3.40	3.37	3.37	3.35	3.34	3.31
-9.0	-10.0	3.69	3.66	3.64	3.63	3.61	3.60	3.57
-7.0	-8.0	3.87	3.86	3.82	3.81	3.79	3.76	3.73
-5.0	-6.0	4.07	4.04	4.01	3.99	3.98	3.95	3.84
-3.0	-4.0	4.27	4.24	4.21	4.19	4.18	4.14	3.84
-1.0	-2.0	4.48	4.45	4.40	4.39	4.37	4.16	3.84
0.0	-1.0	4.59	4.54	4.51	4.50	4.46	4.16	3.84
2.0	1.0	4.78	4.75	4.71	4.63	4.48	4.16	3.84
5.0	4.0	5.12	5.07	4.80	4.63	4.48	4.16	3.84
7.0	6.0	5.33	5.12	4.80	4.63	4.48	4.16	3.84
9.0	7.8	5.44	5.12	4.80	4.63	4.48	4.16	3.84
12.0	10.6	5.44	5.12	4.80	4.63	4.48	4.16	3.84
15.0	13.5	5.44	5.12	4.80	4.63	4.48	4.16	3.84

■ MODEL : ARXB18

Outdoor Temperature		Indoor temperature						
		16°CDB	18°CDB	20°CDB	21°CDB	22°CDB	24°CDB	26°CDB
(°CDB)	(°CWB)	TC	TC	TC	TC	TC	TC	TC
-19.3	-20.0	3.32	3.31	3.29	3.29	3.27	3.25	3.25
-15.0	-16.0	3.68	3.66	3.64	3.63	3.63	3.61	3.59
-12.0	-13.0	3.98	3.96	3.93	3.93	3.91	3.89	3.86
-9.0	-10.0	4.30	4.27	4.25	4.23	4.21	4.20	4.16
-7.0	-8.0	4.52	4.50	4.46	4.44	4.43	4.39	4.36
-5.0	-6.0	4.75	4.71	4.68	4.66	4.64	4.60	4.48
-3.0	-4.0	4.98	4.94	4.91	4.89	4.87	4.84	4.48
-1.0	-2.0	5.23	5.19	5.14	5.12	5.10	4.85	4.48
0.0	-1.0	5.35	5.30	5.26	5.24	5.21	4.85	4.48
2.0	1.0	5.58	5.55	5.49	5.40	5.23	4.85	4.48
5.0	4.0	5.97	5.92	5.60	5.40	5.23	4.85	4.48
7.0	6.0	6.22	5.97	5.60	5.40	5.23	4.85	4.48
9.0	7.8	6.35	5.97	5.60	5.40	5.23	4.85	4.48
12.0	10.6	6.35	5.97	5.60	5.40	5.23	4.85	4.48
15.0	13.5	6.35	5.97	5.60	5.40	5.23	4.85	4.48

TC : Total Capacity kW.

MODEL SELECTION

2-7-4. LOW STATIC PRESSURE DUCT TYPE

■ MODEL : ARXB25

Outdoor Temperature		Indoor temperature						
		16°CDB	18°CDB	20°CDB	21°CDB	22°CDB	24°CDB	26°CDB
(°CDB)	(°CWB)	TC	TC	TC	TC	TC	TC	TC
-19.3	-20.0	4.57	4.55	4.52	4.52	4.50	4.47	4.47
-15.0	-16.0	5.06	5.04	5.01	4.99	4.99	4.96	4.94
-12.0	-13.0	5.48	5.45	5.40	5.40	5.38	5.35	5.30
-9.0	-10.0	5.92	5.87	5.84	5.82	5.79	5.77	5.72
-7.0	-8.0	6.21	6.18	6.14	6.11	6.09	6.04	5.99
-5.0	-6.0	6.53	6.48	6.43	6.40	6.38	6.33	6.16
-3.0	-4.0	6.84	6.80	6.75	6.72	6.70	6.65	6.16
-1.0	-2.0	7.19	7.14	7.06	7.04	7.02	6.67	6.16
0.0	-1.0	7.36	7.28	7.24	7.21	7.16	6.67	6.16
2.0	1.0	7.68	7.63	7.55	7.43	7.19	6.67	6.16
5.0	4.0	8.21	8.14	7.70	7.43	7.19	6.67	6.16
7.0	6.0	8.56	8.21	7.70	7.43	7.19	6.67	6.16
9.0	7.8	8.73	8.21	7.70	7.43	7.19	6.67	6.16
12.0	10.6	8.73	8.21	7.70	7.43	7.19	6.67	6.16
15.0	13.5	8.73	8.21	7.70	7.43	7.19	6.67	6.16

■ MODEL : ARXB30

Outdoor Temperature		Indoor temperature						
		16°CDB	18°CDB	20°CDB	21°CDB	22°CDB	24°CDB	26°CDB
(°CDB)	(°CWB)	TC	TC	TC	TC	TC	TC	TC
-19.3	-20.0	5.64	5.61	5.58	5.58	5.55	5.52	5.52
-15.0	-16.0	6.24	6.21	6.18	6.15	6.15	6.12	6.09
-12.0	-13.0	6.76	6.73	6.67	6.67	6.63	6.60	6.54
-9.0	-10.0	7.30	7.24	7.21	7.18	7.15	7.12	7.06
-7.0	-8.0	7.66	7.63	7.57	7.54	7.51	7.45	7.39
-5.0	-6.0	8.05	7.99	7.93	7.90	7.87	7.81	7.60
-3.0	-4.0	8.44	8.38	8.32	8.29	8.26	8.20	7.60
-1.0	-2.0	8.87	8.81	8.72	8.69	8.66	8.23	7.60
0.0	-1.0	9.08	8.99	8.93	8.90	8.84	8.23	7.60
2.0	1.0	9.47	9.41	9.32	9.17	8.87	8.23	7.60
5.0	4.0	10.1	10.0	9.50	9.17	8.87	8.23	7.60
7.0	6.0	10.6	10.1	9.50	9.17	8.87	8.23	7.60
9.0	7.8	10.8	10.1	9.50	9.17	8.87	8.23	7.60
12.0	10.6	10.8	10.1	9.50	9.17	8.87	8.23	7.60
15.0	13.5	10.8	10.1	9.50	9.17	8.87	8.23	7.60

■ MODEL : ARXB36

Outdoor Temperature		Indoor temperature						
		16°CDB	18°CDB	20°CDB	21°CDB	22°CDB	24°CDB	26°CDB
(°CDB)	(°CWB)	TC	TC	TC	TC	TC	TC	TC
-19.3	-20.0	7.54	7.50	7.46	7.46	7.42	7.38	7.38
-15.0	-16.0	8.35	8.31	8.27	8.22	8.22	8.18	8.14
-12.0	-13.0	9.03	8.99	8.91	8.91	8.87	8.83	8.75
-9.0	-10.0	9.76	9.68	9.64	9.60	9.56	9.51	9.43
-7.0	-8.0	10.2	10.2	10.1	10.1	10.0	9.96	9.88
-5.0	-6.0	10.8	10.7	10.6	10.6	10.5	10.4	10.2
-3.0	-4.0	11.3	11.2	11.1	11.1	11.0	11.0	10.2
-1.0	-2.0	11.9	11.8	11.7	11.6	11.6	11.0	10.2
0.0	-1.0	12.1	12.0	11.9	11.9	11.8	11.0	10.2
2.0	1.0	12.7	12.6	12.5	12.3	11.9	11.0	10.2
5.0	4.0	13.5	13.4	12.7	12.3	11.9	11.0	10.2
7.0	6.0	14.1	13.5	12.7	12.3	11.9	11.0	10.2
9.0	7.8	14.4	13.5	12.7	12.3	11.9	11.0	10.2
12.0	10.6	14.4	13.5	12.7	12.3	11.9	11.0	10.2
15.0	13.5	14.4	13.5	12.7	12.3	11.9	11.0	10.2

■ MODEL : ARXB45

Outdoor Temperature		Indoor temperature						
		16°CDB	18°CDB	20°CDB	21°CDB	22°CDB	24°CDB	26°CDB
(°CDB)	(°CWB)	TC	TC	TC	TC	TC	TC	TC
-19.3	-20.0	8.49	8.44	8.40	8.40	8.35	8.31	8.31
-15.0	-16.0	9.40	9.35	9.31	9.26	9.26	9.22	9.17
-12.0	-13.0	10.2	10.1	10.0	10.0	9.99	9.94	9.85
-9.0	-10.0	11.0	10.9	10.8	10.8	10.8	10.7	10.6
-7.0	-8.0	11.5	11.5	11.4	11.3	11.3	11.2	11.1
-5.0	-6.0	12.1	12.0	11.9	11.9	11.8	11.8	11.4
-3.0	-4.0	12.7	12.6	12.5	12.5	12.4	12.3	11.4
-1.0	-2.0	13.3	13.3	13.1	13.1	13.0	12.4	11.4
0.0	-1.0	13.7	13.5	13.4	13.4	13.3	12.4	11.4
2.0	1.0	14.3	14.2	14.0	13.8	13.3	12.4	11.4
5.0	4.0	15.3	15.1	14.3	13.8	13.3	12.4	11.4
7.0	6.0	15.9	15.3	14.3	13.8	13.3	12.4	11.4
9.0	7.8	16.2	15.3	14.3	13.8	13.3	12.4	11.4
12.0	10.6	16.2	15.3	14.3	13.8	13.3	12.4	11.4
15.0	13.5	16.2	15.3	14.3	13.8	13.3	12.4	11.4

TC : Total Capacity kW.

MODEL SELECTION

2-7-5. DUCT TYPE

■ MODEL : ARXA25

Outdoor Temperature		Indoor temperature						
		16°CDB	18°CDB	20°CDB	21°CDB	22°CDB	24°CDB	26°CDB
(°CDB)	(°CWB)	TC	TC	TC	TC	TC	TC	TC
-19.3	-20.0	4.57	4.55	4.52	4.52	4.50	4.47	4.47
-15.0	-16.0	5.06	5.04	5.01	4.99	4.99	4.96	4.94
-12.0	-13.0	5.48	5.45	5.40	5.40	5.38	5.35	5.30
-9.0	-10.0	5.92	5.87	5.84	5.82	5.79	5.77	5.72
-7.0	-8.0	6.21	6.18	6.14	6.11	6.09	6.04	5.99
-5.0	-6.0	6.53	6.48	6.43	6.40	6.38	6.33	6.16
-3.0	-4.0	6.84	6.80	6.75	6.72	6.70	6.65	6.16
-1.0	-2.0	7.19	7.14	7.06	7.04	7.02	6.67	6.16
0.0	-1.0	7.36	7.28	7.24	7.21	7.16	6.67	6.16
2.0	1.0	7.68	7.63	7.55	7.43	7.19	6.67	6.16
5.0	4.0	8.21	8.14	7.70	7.43	7.19	6.67	6.16
7.0	6.0	8.56	8.21	7.70	7.43	7.19	6.67	6.16
9.0	7.8	8.73	8.21	7.70	7.43	7.19	6.67	6.16
12.0	10.6	8.73	8.21	7.70	7.43	7.19	6.67	6.16
15.0	13.5	8.73	8.21	7.70	7.43	7.19	6.67	6.16

■ MODEL : ARXA30

Outdoor Temperature		Indoor temperature						
		16°CDB	18°CDB	20°CDB	21°CDB	22°CDB	24°CDB	26°CDB
(°CDB)	(°CWB)	TC	TC	TC	TC	TC	TC	TC
-19.3	-20.0	5.64	5.61	5.58	5.58	5.55	5.52	5.52
-15.0	-16.0	6.24	6.21	6.18	6.15	6.15	6.12	6.09
-12.0	-13.0	6.76	6.73	6.67	6.67	6.63	6.60	6.54
-9.0	-10.0	7.30	7.24	7.21	7.18	7.15	7.12	7.06
-7.0	-8.0	7.66	7.63	7.57	7.54	7.51	7.45	7.39
-5.0	-6.0	8.05	7.99	7.93	7.90	7.87	7.81	7.60
-3.0	-4.0	8.44	8.38	8.32	8.29	8.26	8.20	7.60
-1.0	-2.0	8.87	8.81	8.72	8.69	8.66	8.23	7.60
0.0	-1.0	9.08	8.99	8.93	8.90	8.84	8.23	7.60
2.0	1.0	9.47	9.41	9.32	9.17	8.87	8.23	7.60
5.0	4.0	10.1	10.0	9.50	9.17	8.87	8.23	7.60
7.0	6.0	10.6	10.1	9.50	9.17	8.87	8.23	7.60
9.0	7.8	10.8	10.1	9.50	9.17	8.87	8.23	7.60
12.0	10.6	10.8	10.1	9.50	9.17	8.87	8.23	7.60
15.0	13.5	10.8	10.1	9.50	9.17	8.87	8.23	7.60

■ MODEL : ARXA36

Outdoor Temperature		Indoor temperature						
		16°CDB	18°CDB	20°CDB	21°CDB	22°CDB	24°CDB	26°CDB
(°CDB)	(°CWB)	TC	TC	TC	TC	TC	TC	TC
-19.3	-20.0	7.54	7.50	7.46	7.46	7.42	7.38	7.38
-15.0	-16.0	8.35	8.31	8.27	8.22	8.22	8.18	8.14
-12.0	-13.0	9.03	8.99	8.91	8.91	8.87	8.83	8.75
-9.0	-10.0	9.76	9.68	9.64	9.60	9.56	9.51	9.43
-7.0	-8.0	10.2	10.2	10.1	10.1	10.0	9.96	9.88
-5.0	-6.0	10.8	10.7	10.6	10.6	10.5	10.4	10.2
-3.0	-4.0	11.3	11.2	11.1	11.1	11.0	11.0	10.2
-1.0	-2.0	11.9	11.8	11.7	11.6	11.6	11.0	10.2
0.0	-1.0	12.1	12.0	11.9	11.9	11.8	11.0	10.2
2.0	1.0	12.7	12.6	12.5	12.3	11.9	11.0	10.2
5.0	4.0	13.5	13.4	12.7	12.3	11.9	11.0	10.2
7.0	6.0	14.1	13.5	12.7	12.3	11.9	11.0	10.2
9.0	7.8	14.4	13.5	12.7	12.3	11.9	11.0	10.2
12.0	10.6	14.4	13.5	12.7	12.3	11.9	11.0	10.2
15.0	13.5	14.4	13.5	12.7	12.3	11.9	11.0	10.2

■ MODEL : ARXA45

Outdoor Temperature		Indoor temperature						
		16°CDB	18°CDB	20°CDB	21°CDB	22°CDB	24°CDB	26°CDB
(°CDB)	(°CWB)	TC	TC	TC	TC	TC	TC	TC
-19.3	-20.0	8.49	8.44	8.40	8.40	8.35	8.31	8.31
-15.0	-16.0	9.40	9.35	9.31	9.26	9.26	9.22	9.17
-12.0	-13.0	10.2	10.1	10.0	10.0	9.99	9.94	9.85
-9.0	-10.0	11.0	10.9	10.8	10.8	10.8	10.7	10.6
-7.0	-8.0	11.5	11.5	11.4	11.3	11.3	11.2	11.1
-5.0	-6.0	12.1	12.0	11.9	11.9	11.8	11.8	11.4
-3.0	-4.0	12.7	12.6	12.5	12.5	12.4	12.3	11.4
-1.0	-2.0	13.3	13.3	13.1	13.1	13.0	12.4	11.4
0.0	-1.0	13.7	13.5	13.4	13.4	13.3	12.4	11.4
2.0	1.0	14.3	14.2	14.0	13.8	13.3	12.4	11.4
5.0	4.0	15.3	15.1	14.3	13.8	13.3	12.4	11.4
7.0	6.0	15.9	15.3	14.3	13.8	13.3	12.4	11.4
9.0	7.8	16.2	15.3	14.3	13.8	13.3	12.4	11.4
12.0	10.6	16.2	15.3	14.3	13.8	13.3	12.4	11.4
15.0	13.5	16.2	15.3	14.3	13.8	13.3	12.4	11.4

TC : Total Capacity kW.

MODEL SELECTION

2-7-6. HIGH STATIC PRESSURE DUCT TYPE

■ MODEL : ARXC36

Outdoor Temperature		Indoor temperature						
		16°CDB	18°CDB	20°CDB	21°CDB	22°CDB	24°CDB	26°CDB
(°CDB)	(°CWB)	TC	TC	TC	TC	TC	TC	TC
-19.3	-20.0	7.54	7.50	7.46	7.46	7.42	7.38	7.38
-15.0	-16.0	8.35	8.31	8.27	8.22	8.22	8.18	8.14
-12.0	-13.0	9.03	8.99	8.91	8.91	8.87	8.83	8.75
-9.0	-10.0	9.76	9.68	9.64	9.60	9.56	9.51	9.43
-7.0	-8.0	10.2	10.2	10.1	10.1	10.0	9.96	9.88
-5.0	-6.0	10.8	10.7	10.6	10.6	10.5	10.4	10.2
-3.0	-4.0	11.3	11.2	11.1	11.1	11.0	11.0	10.2
-1.0	-2.0	11.9	11.8	11.7	11.6	11.6	11.0	10.2
0.0	-1.0	12.1	12.0	11.9	11.9	11.8	11.0	10.2
2.0	1.0	12.7	12.6	12.5	12.3	11.9	11.0	10.2
5.0	4.0	13.5	13.4	12.7	12.3	11.9	11.0	10.2
7.0	6.0	14.1	13.5	12.7	12.3	11.9	11.0	10.2
9.0	7.8	14.4	13.5	12.7	12.3	11.9	11.0	10.2
12.0	10.6	14.4	13.5	12.7	12.3	11.9	11.0	10.2
15.0	13.5	14.4	13.5	12.7	12.3	11.9	11.0	10.2

■ MODEL : ARXC45

Outdoor Temperature		Indoor temperature						
		16°CDB	18°CDB	20°CDB	21°CDB	22°CDB	24°CDB	26°CDB
(°CDB)	(°CWB)	TC	TC	TC	TC	TC	TC	TC
-19.3	-20.0	8.49	8.44	8.40	8.40	8.35	8.31	8.31
-15.0	-16.0	9.40	9.35	9.31	9.26	9.26	9.22	9.17
-12.0	-13.0	10.2	10.1	10.0	10.0	9.99	9.94	9.85
-9.0	-10.0	11.0	10.9	10.8	10.8	10.8	10.7	10.6
-7.0	-8.0	11.5	11.5	11.4	11.3	11.3	11.2	11.1
-5.0	-6.0	12.1	12.0	11.9	11.9	11.8	11.8	11.4
-3.0	-4.0	12.7	12.6	12.5	12.5	12.4	12.3	11.4
-1.0	-2.0	13.3	13.3	13.1	13.1	13.0	12.4	11.4
0.0	-1.0	13.7	13.5	13.4	13.4	13.3	12.4	11.4
2.0	1.0	14.3	14.2	14.0	13.8	13.3	12.4	11.4
5.0	4.0	15.3	15.1	14.3	13.8	13.3	12.4	11.4
7.0	6.0	15.9	15.3	14.3	13.8	13.3	12.4	11.4
9.0	7.8	16.2	15.3	14.3	13.8	13.3	12.4	11.4
12.0	10.6	16.2	15.3	14.3	13.8	13.3	12.4	11.4
15.0	13.5	16.2	15.3	14.3	13.8	13.3	12.4	11.4

■ MODEL : ARXC60

Outdoor Temperature		Indoor temperature						
		16°CDB	18°CDB	20°CDB	21°CDB	22°CDB	24°CDB	26°CDB
(°CDB)	(°CWB)	TC	TC	TC	TC	TC	TC	TC
-19.3	-20.0	10.8	10.7	10.7	10.7	10.6	10.6	10.6
-15.0	-16.0	12.0	11.9	11.8	11.8	11.8	11.7	11.7
-12.0	-13.0	12.9	12.9	12.8	12.8	12.7	12.7	12.5
-9.0	-10.0	14.0	13.9	13.8	13.8	13.7	13.6	13.5
-7.0	-8.0	14.7	14.6	14.5	14.4	14.4	14.3	14.2
-5.0	-6.0	15.4	15.3	15.2	15.1	15.1	15.0	14.6
-3.0	-4.0	16.2	16.1	15.9	15.9	15.8	15.7	14.6
-1.0	-2.0	17.0	16.9	16.7	16.6	16.6	15.8	14.6
0.0	-1.0	17.4	17.2	17.1	17.0	16.9	15.8	14.6
2.0	1.0	18.1	18.0	17.9	17.6	17.0	15.8	14.6
5.0	4.0	19.4	19.2	18.2	17.6	17.0	15.8	14.6
7.0	6.0	20.2	19.4	18.2	17.6	17.0	15.8	14.6
9.0	7.8	20.6	19.4	18.2	17.6	17.0	15.8	14.6
12.0	10.6	20.6	19.4	18.2	17.6	17.0	15.8	14.6
15.0	13.5	20.6	19.4	18.2	17.6	17.0	15.8	14.6

■ MODEL : ARXC90

Outdoor Temperature		Indoor temperature						
		16°CDB	18°CDB	20°CDB	21°CDB	22°CDB	24°CDB	26°CDB
(°CDB)	(°CWB)	TC	TC	TC	TC	TC	TC	TC
-19.3	-20.0	17.5	17.4	17.3	17.3	17.2	17.1	17.1
-15.0	-16.0	19.4	19.3	19.2	19.1	19.1	19.0	18.9
-12.0	-13.0	21.0	20.9	20.7	20.7	20.6	20.5	20.3
-9.0	-10.0	22.7	22.5	22.4	22.3	22.2	22.1	21.9
-7.0	-8.0	23.8	23.7	23.5	23.4	23.3	23.1	22.9
-5.0	-6.0	25.0	24.8	24.6	24.5	24.4	24.3	23.6
-3.0	-4.0	26.2	26.0	25.8	25.8	25.7	25.5	23.6
-1.0	-2.0	27.5	27.3	27.1	27.0	26.9	25.6	23.6
0.0	-1.0	28.2	27.9	27.7	27.6	27.4	25.6	23.6
2.0	1.0	29.4	29.2	28.9	28.5	27.5	25.6	23.6
5.0	4.0	31.5	31.2	29.5	28.5	27.5	25.6	23.6
7.0	6.0	32.8	31.5	29.5	28.5	27.5	25.6	23.6
9.0	7.8	33.4	31.5	29.5	28.5	27.5	25.6	23.6
12.0	10.6	33.4	31.5	29.5	28.5	27.5	25.6	23.6
15.0	13.5	33.4	31.5	29.5	28.5	27.5	25.6	23.6

TC : Total Capacity kW

MODEL SELECTION

2-7-7. FLOOR / CEILING TYPE

■ MODEL : AB∗A12

Outdoor Temperature		Indoor temperature						
		16°CDB	18°CDB	20°CDB	21°CDB	22°CDB	24°CDB	26°CDB
(°CDB)	(°CWB)	TC	TC	TC	TC	TC	TC	TC
-19.3	-20.0	2.43	2.42	2.41	2.41	2.39	2.38	2.38
-15.0	-16.0	2.69	2.68	2.67	2.66	2.66	2.64	2.63
-12.0	-13.0	2.92	2.90	2.88	2.88	2.86	2.85	2.82
-9.0	-10.0	3.15	3.12	3.11	3.10	3.08	3.07	3.05
-7.0	-8.0	3.31	3.29	3.27	3.25	3.24	3.21	3.19
-5.0	-6.0	3.48	3.45	3.42	3.41	3.40	3.37	3.28
-3.0	-4.0	3.64	3.62	3.59	3.58	3.57	3.54	3.28
-1.0	-2.0	3.83	3.80	3.76	3.75	3.74	3.55	3.28
0.0	-1.0	3.92	3.88	3.85	3.84	3.81	3.55	3.28
2.0	1.0	4.09	4.06	4.02	3.96	3.83	3.55	3.28
5.0	4.0	4.37	4.33	4.10	3.96	3.83	3.55	3.28
7.0	6.0	4.56	4.37	4.10	3.96	3.83	3.55	3.28
9.0	7.8	4.65	4.37	4.10	3.96	3.83	3.55	3.28
12.0	10.6	4.65	4.37	4.10	3.96	3.83	3.55	3.28
15.0	13.5	4.65	4.37	4.10	3.96	3.83	3.55	3.28

■ MODEL : AB∗A14

Outdoor Temperature		Indoor temperature						
		16°CDB	18°CDB	20°CDB	21°CDB	22°CDB	24°CDB	26°CDB
(°CDB)	(°CWB)	TC	TC	TC	TC	TC	TC	TC
-19.3	-20.0	2.97	2.95	2.94	2.94	2.92	2.90	2.90
-15.0	-16.0	3.29	3.27	3.25	3.24	3.24	3.22	3.21
-12.0	-13.0	3.56	3.54	3.51	3.51	3.49	3.48	3.44
-9.0	-10.0	3.84	3.81	3.79	3.78	3.76	3.75	3.71
-7.0	-8.0	4.03	4.02	3.98	3.97	3.95	3.92	3.89
-5.0	-6.0	4.24	4.21	4.17	4.16	4.14	4.11	4.00
-3.0	-4.0	4.44	4.41	4.38	4.37	4.35	4.32	4.00
-1.0	-2.0	4.67	4.63	4.59	4.57	4.56	4.33	4.00
0.0	-1.0	4.78	4.73	4.70	4.68	4.65	4.33	4.00
2.0	1.0	4.98	4.95	4.90	4.83	4.67	4.33	4.00
5.0	4.0	5.33	5.29	5.00	4.83	4.67	4.33	4.00
7.0	6.0	5.56	5.33	5.00	4.83	4.67	4.33	4.00
9.0	7.8	5.67	5.33	5.00	4.83	4.67	4.33	4.00
12.0	10.6	5.67	5.33	5.00	4.83	4.67	4.33	4.00
15.0	13.5	5.67	5.33	5.00	4.83	4.67	4.33	4.00

■ MODEL : AB∗A18

Outdoor Temperature		Indoor temperature						
		16°CDB	18°CDB	20°CDB	21°CDB	22°CDB	24°CDB	26°CDB
(°CDB)	(°CWB)	TC	TC	TC	TC	TC	TC	TC
-19.3	-20.0	3.32	3.31	3.29	3.29	3.27	3.25	3.25
-15.0	-16.0	3.68	3.66	3.64	3.63	3.63	3.61	3.59
-12.0	-13.0	3.98	3.96	3.93	3.93	3.91	3.89	3.86
-9.0	-10.0	4.30	4.27	4.25	4.23	4.21	4.20	4.16
-7.0	-8.0	4.52	4.50	4.46	4.44	4.43	4.39	4.36
-5.0	-6.0	4.75	4.71	4.68	4.66	4.64	4.60	4.48
-3.0	-4.0	4.98	4.94	4.91	4.89	4.87	4.84	4.48
-1.0	-2.0	5.23	5.19	5.14	5.12	5.10	4.85	4.48
0.0	-1.0	5.35	5.30	5.26	5.24	5.21	4.85	4.48
2.0	1.0	5.58	5.55	5.49	5.40	5.23	4.85	4.48
5.0	4.0	5.97	5.92	5.60	5.40	5.23	4.85	4.48
7.0	6.0	6.22	5.97	5.60	5.40	5.23	4.85	4.48
9.0	7.8	6.35	5.97	5.60	5.40	5.23	4.85	4.48
12.0	10.6	6.35	5.97	5.60	5.40	5.23	4.85	4.48
15.0	13.5	6.35	5.97	5.60	5.40	5.23	4.85	4.48

■ MODEL : AB∗A24

Outdoor Temperature		Indoor temperature						
		16°CDB	18°CDB	20°CDB	21°CDB	22°CDB	24°CDB	26°CDB
(°CDB)	(°CWB)	TC	TC	TC	TC	TC	TC	TC
-19.3	-20.0	4.57	4.55	4.52	4.52	4.50	4.47	4.47
-15.0	-16.0	5.06	5.04	5.01	4.99	4.99	4.96	4.94
-12.0	-13.0	5.48	5.45	5.40	5.40	5.38	5.35	5.30
-9.0	-10.0	5.92	5.87	5.84	5.82	5.79	5.77	5.72
-7.0	-8.0	6.21	6.18	6.14	6.11	6.09	6.04	5.99
-5.0	-6.0	6.53	6.48	6.43	6.40	6.38	6.33	6.16
-3.0	-4.0	6.84	6.80	6.75	6.72	6.70	6.65	6.16
-1.0	-2.0	7.19	7.14	7.06	7.04	7.02	6.67	6.16
0.0	-1.0	7.36	7.28	7.24	7.21	7.16	6.67	6.16
2.0	1.0	7.68	7.63	7.55	7.43	7.19	6.67	6.16
5.0	4.0	8.21	8.14	7.70	7.43	7.19	6.67	6.16
7.0	6.0	8.56	8.21	7.70	7.43	7.19	6.67	6.16
9.0	7.8	8.73	8.21	7.70	7.43	7.19	6.67	6.16
12.0	10.6	8.73	8.21	7.70	7.43	7.19	6.67	6.16
15.0	13.5	8.73	8.21	7.70	7.43	7.19	6.67	6.16

TC : Total Capacity kW.

MODEL SELECTION

2-7-8. CEILING TYPE

■ MODEL : AB∗A30

Outdoor Temperature		Indoor temperature						
		16°CDB	18°CDB	20°CDB	21°CDB	22°CDB	24°CDB	26°CDB
(°CDB)	(°CWB)	TC	TC	TC	TC	TC	TC	TC
-19.3	-20.0	5.40	5.37	5.34	5.34	5.32	5.29	5.29
-15.0	-16.0	5.98	5.95	5.92	5.89	5.89	5.86	5.84
-12.0	-13.0	6.47	6.44	6.38	6.38	6.36	6.33	6.27
-9.0	-10.0	6.99	6.93	6.90	6.88	6.85	6.82	6.76
-7.0	-8.0	7.34	7.31	7.25	7.22	7.19	7.14	7.08
-5.0	-6.0	7.71	7.66	7.60	7.57	7.54	7.48	7.28
-3.0	-4.0	8.09	8.03	7.97	7.94	7.92	7.86	7.28
-1.0	-2.0	8.49	8.44	8.35	8.32	8.29	7.89	7.28
0.0	-1.0	8.70	8.61	8.55	8.52	8.46	7.89	7.28
2.0	1.0	9.07	9.01	8.93	8.78	8.49	7.89	7.28
5.0	4.0	9.71	9.62	9.10	8.78	8.49	7.89	7.28
7.0	6.0	10.1	9.71	9.10	8.78	8.49	7.89	7.28
9.0	7.8	10.3	9.71	9.10	8.78	8.49	7.89	7.28
12.0	10.6	10.3	9.71	9.10	8.78	8.49	7.89	7.28
15.0	13.5	10.3	9.71	9.10	8.78	8.49	7.89	7.28

■ MODEL : AB∗A36

Outdoor Temperature		Indoor temperature						
		16°CDB	18°CDB	20°CDB	21°CDB	22°CDB	24°CDB	26°CDB
(°CDB)	(°CWB)	TC	TC	TC	TC	TC	TC	TC
-19.3	-20.0	7.54	7.50	7.46	7.46	7.42	7.38	7.38
-15.0	-16.0	8.35	8.31	8.27	8.22	8.22	8.18	8.14
-12.0	-13.0	9.03	8.99	8.91	8.91	8.87	8.83	8.75
-9.0	-10.0	9.76	9.68	9.64	9.60	9.56	9.51	9.43
-7.0	-8.0	10.2	10.2	10.1	10.1	10.0	9.96	9.88
-5.0	-6.0	10.8	10.7	10.6	10.6	10.5	10.4	10.2
-3.0	-4.0	11.3	11.2	11.1	11.1	11.0	11.0	10.2
-1.0	-2.0	11.9	11.8	11.7	11.6	11.6	11.0	10.2
0.0	-1.0	12.1	12.0	11.9	11.9	11.8	11.0	10.2
2.0	1.0	12.7	12.6	12.5	12.3	11.9	11.0	10.2
5.0	4.0	13.5	13.4	12.7	12.3	11.9	11.0	10.2
7.0	6.0	14.1	13.5	12.7	12.3	11.9	11.0	10.2
9.0	7.8	14.4	13.5	12.7	12.3	11.9	11.0	10.2
12.0	10.6	14.4	13.5	12.7	12.3	11.9	11.0	10.2
15.0	13.5	14.4	13.5	12.7	12.3	11.9	11.0	10.2

■ MODEL : AB∗A45

Outdoor Temperature		Indoor temperature						
		16°CDB	18°CDB	20°CDB	21°CDB	22°CDB	24°CDB	26°CDB
(°CDB)	(°CWB)	TC	TC	TC	TC	TC	TC	TC
-19.3	-20.0	8.13	8.09	8.05	8.05	8.00	7.96	7.96
-15.0	-16.0	9.00	8.96	8.92	8.87	8.87	8.83	8.79
-12.0	-13.0	9.74	9.70	9.61	9.61	9.57	9.52	9.44
-9.0	-10.0	10.5	10.4	10.4	10.4	10.3	10.3	10.2
-7.0	-8.0	11.0	11.0	10.9	10.9	10.8	10.7	10.7
-5.0	-6.0	11.6	11.5	11.4	11.4	11.4	11.3	11.0
-3.0	-4.0	12.2	12.1	12.0	12.0	11.9	11.8	11.0
-1.0	-2.0	12.8	12.7	12.6	12.5	12.5	11.9	11.0
0.0	-1.0	13.1	13.0	12.9	12.8	12.7	11.9	11.0
2.0	1.0	13.7	13.6	13.4	13.2	12.8	11.9	11.0
5.0	4.0	14.6	14.5	13.7	13.2	12.8	11.9	11.0
7.0	6.0	15.2	14.6	13.7	13.2	12.8	11.9	11.0
9.0	7.8	15.5	14.6	13.7	13.2	12.8	11.9	11.0
12.0	10.6	15.5	14.6	13.7	13.2	12.8	11.9	11.0
15.0	13.5	15.5	14.6	13.7	13.2	12.8	11.9	11.0

■ MODEL : AB∗A54

Outdoor Temperature		Indoor temperature						
		16°CDB	18°CDB	20°CDB	21°CDB	22°CDB	24°CDB	26°CDB
(°CDB)	(°CWB)	TC	TC	TC	TC	TC	TC	TC
-19.3	-20.0	9.38	9.33	9.28	9.28	9.23	9.18	9.18
-15.0	-16.0	10.4	10.3	10.3	10.2	10.2	10.2	10.1
-12.0	-13.0	11.2	11.2	11.1	11.1	11.0	11.0	10.9
-9.0	-10.0	12.1	12.0	12.0	11.9	11.9	11.8	11.7
-7.0	-8.0	12.7	12.7	12.6	12.5	12.5	12.4	12.3
-5.0	-6.0	13.4	13.3	13.2	13.1	13.1	13.0	12.6
-3.0	-4.0	14.0	13.9	13.8	13.8	13.7	13.6	12.6
-1.0	-2.0	14.7	14.6	14.5	14.4	14.4	13.7	12.6
0.0	-1.0	15.1	14.9	14.8	14.8	14.7	13.7	12.6
2.0	1.0	15.7	15.6	15.5	15.2	14.7	13.7	12.6
5.0	4.0	16.9	16.7	15.8	15.2	14.7	13.7	12.6
7.0	6.0	17.6	16.9	15.8	15.2	14.7	13.7	12.6
9.0	7.8	17.9	16.9	15.8	15.2	14.7	13.7	12.6
12.0	10.6	17.9	16.9	15.8	15.2	14.7	13.7	12.6
15.0	13.5	17.9	16.9	15.8	15.2	14.7	13.7	12.6

TC : Total Capacity kW.

MODEL SELECTION

2-7-9. COMPACT WALL MOUNTED TYPE (Comfort model)

■ MODEL : AS∗E07

Outdoor Temperature		Indoor temperature						
		16°CDB	18°CDB	20°CDB	21°CDB	22°CDB	24°CDB	26°CDB
(°CDB)	(°CWB)	TC	TC	TC	TC	TC	TC	TC
-19.3	-20.0	1.48	1.48	1.47	1.47	1.46	1.45	1.45
-15.0	-16.0	1.64	1.63	1.63	1.62	1.62	1.61	1.60
-12.0	-13.0	1.78	1.77	1.75	1.75	1.75	1.74	1.72
-9.0	-10.0	1.92	1.90	1.90	1.89	1.88	1.87	1.86
-7.0	-8.0	2.02	2.01	1.99	1.98	1.98	1.96	1.94
-5.0	-6.0	2.12	2.10	2.09	2.08	2.07	2.06	2.00
-3.0	-4.0	2.22	2.21	2.19	2.18	2.17	2.16	2.00
-1.0	-2.0	2.33	2.32	2.29	2.29	2.28	2.17	2.00
0.0	-1.0	2.39	2.37	2.35	2.34	2.33	2.17	2.00
2.0	1.0	2.49	2.48	2.45	2.41	2.33	2.17	2.00
5.0	4.0	2.67	2.64	2.50	2.41	2.33	2.17	2.00
7.0	6.0	2.78	2.67	2.50	2.41	2.33	2.17	2.00
9.0	7.8	2.83	2.67	2.50	2.41	2.33	2.17	2.00
12.0	10.6	2.83	2.67	2.50	2.41	2.33	2.17	2.00
15.0	13.5	2.83	2.67	2.50	2.41	2.33	2.17	2.00

■ MODEL : AS∗E09

Outdoor Temperature		Indoor temperature						
		16°CDB	18°CDB	20°CDB	21°CDB	22°CDB	24°CDB	26°CDB
(°CDB)	(°CWB)	TC	TC	TC	TC	TC	TC	TC
-19.3	-20.0	1.90	1.89	1.88	1.88	1.87	1.86	1.86
-15.0	-16.0	2.10	2.09	2.08	2.07	2.07	2.06	2.05
-12.0	-13.0	2.28	2.27	2.25	2.25	2.23	2.22	2.20
-9.0	-10.0	2.46	2.44	2.43	2.42	2.41	2.40	2.38
-7.0	-8.0	2.58	2.57	2.55	2.54	2.53	2.51	2.49
-5.0	-6.0	2.71	2.69	2.67	2.66	2.65	2.63	2.56
-3.0	-4.0	2.84	2.82	2.80	2.79	2.78	2.76	2.56
-1.0	-2.0	2.99	2.97	2.94	2.93	2.92	2.77	2.56
0.0	-1.0	3.06	3.03	3.01	3.00	2.98	2.77	2.56
2.0	1.0	3.19	3.17	3.14	3.09	2.99	2.77	2.56
5.0	4.0	3.41	3.38	3.20	3.09	2.99	2.77	2.56
7.0	6.0	3.56	3.41	3.20	3.09	2.99	2.77	2.56
9.0	7.8	3.63	3.41	3.20	3.09	2.99	2.77	2.56
12.0	10.6	3.63	3.41	3.20	3.09	2.99	2.77	2.56
15.0	13.5	3.63	3.41	3.20	3.09	2.99	2.77	2.56

■ MODEL : AS∗E12

Outdoor Temperature		Indoor temperature						
		16°CDB	18°CDB	20°CDB	21°CDB	22°CDB	24°CDB	26°CDB
(°CDB)	(°CWB)	TC	TC	TC	TC	TC	TC	TC
-19.3	-20.0	2.43	2.42	2.41	2.41	2.39	2.38	2.38
-15.0	-16.0	2.69	2.68	2.67	2.66	2.66	2.64	2.63
-12.0	-13.0	2.92	2.90	2.88	2.88	2.86	2.85	2.82
-9.0	-10.0	3.15	3.12	3.11	3.10	3.08	3.07	3.05
-7.0	-8.0	3.31	3.29	3.27	3.25	3.24	3.21	3.19
-5.0	-6.0	3.48	3.45	3.42	3.41	3.40	3.37	3.28
-3.0	-4.0	3.64	3.62	3.59	3.58	3.57	3.54	3.28
-1.0	-2.0	3.83	3.80	3.76	3.75	3.74	3.55	3.28
0.0	-1.0	3.92	3.88	3.85	3.84	3.81	3.55	3.28
2.0	1.0	4.09	4.06	4.02	3.96	3.83	3.55	3.28
5.0	4.0	4.37	4.33	4.10	3.96	3.83	3.55	3.28
7.0	6.0	4.56	4.37	4.10	3.96	3.83	3.55	3.28
9.0	7.8	4.65	4.37	4.10	3.96	3.83	3.55	3.28
12.0	10.6	4.65	4.37	4.10	3.96	3.83	3.55	3.28
15.0	13.5	4.65	4.37	4.10	3.96	3.83	3.55	3.28

■ MODEL : AS∗E14

Outdoor Temperature		Indoor temperature						
		16°CDB	18°CDB	20°CDB	21°CDB	22°CDB	24°CDB	26°CDB
(°CDB)	(°CWB)	TC	TC	TC	TC	TC	TC	TC
-19.3	-20.0	2.85	2.83	2.82	2.82	2.80	2.79	2.79
-15.0	-16.0	3.15	3.14	3.12	3.11	3.11	3.09	3.08
-12.0	-13.0	3.41	3.40	3.37	3.37	3.35	3.34	3.31
-9.0	-10.0	3.69	3.66	3.64	3.63	3.61	3.60	3.57
-7.0	-8.0	3.87	3.86	3.82	3.81	3.79	3.76	3.73
-5.0	-6.0	4.07	4.04	4.01	3.99	3.98	3.95	3.84
-3.0	-4.0	4.27	4.24	4.21	4.19	4.18	4.14	3.84
-1.0	-2.0	4.48	4.45	4.40	4.39	4.37	4.16	3.84
0.0	-1.0	4.59	4.54	4.51	4.50	4.46	4.16	3.84
2.0	1.0	4.78	4.75	4.71	4.63	4.48	4.16	3.84
5.0	4.0	5.12	5.07	4.80	4.63	4.48	4.16	3.84
7.0	6.0	5.33	5.12	4.80	4.63	4.48	4.16	3.84
9.0	7.8	5.44	5.12	4.80	4.63	4.48	4.16	3.84
12.0	10.6	5.44	5.12	4.80	4.63	4.48	4.16	3.84
15.0	13.5	5.44	5.12	4.80	4.63	4.48	4.16	3.84

TC : Total Capacity kW.

MODEL SELECTION

2-7-10. WALL MOUNTED TYPE

■ MODEL : AS∗A18

Outdoor Temperature		Indoor temperature						
		16°CDB	18°CDB	20°CDB	21°CDB	22°CDB	24°CDB	26°CDB
(°CDB)	(°CWB)	TC	TC	TC	TC	TC	TC	TC
-19.3	-20.0	3.32	3.31	3.29	3.29	3.27	3.25	3.25
-15.0	-16.0	3.68	3.66	3.64	3.63	3.63	3.61	3.59
-12.0	-13.0	3.98	3.96	3.93	3.93	3.91	3.89	3.86
-9.0	-10.0	4.30	4.27	4.25	4.23	4.21	4.20	4.16
-7.0	-8.0	4.52	4.50	4.46	4.44	4.43	4.39	4.36
-5.0	-6.0	4.75	4.71	4.68	4.66	4.64	4.60	4.48
-3.0	-4.0	4.98	4.94	4.91	4.89	4.87	4.84	4.48
-1.0	-2.0	5.23	5.19	5.14	5.12	5.10	4.85	4.48
0.0	-1.0	5.35	5.30	5.26	5.24	5.21	4.85	4.48
2.0	1.0	5.58	5.55	5.49	5.40	5.23	4.85	4.48
5.0	4.0	5.97	5.92	5.60	5.40	5.23	4.85	4.48
7.0	6.0	6.22	5.97	5.60	5.40	5.23	4.85	4.48
9.0	7.8	6.35	5.97	5.60	5.40	5.23	4.85	4.48
12.0	10.6	6.35	5.97	5.60	5.40	5.23	4.85	4.48
15.0	13.5	6.35	5.97	5.60	5.40	5.23	4.85	4.48

■ MODEL : AS∗A24

Outdoor Temperature		Indoor temperature						
		16°CDB	18°CDB	20°CDB	21°CDB	22°CDB	24°CDB	26°CDB
(°CDB)	(°CWB)	TC	TC	TC	TC	TC	TC	TC
-19.3	-20.0	4.63	4.61	4.58	4.58	4.56	4.53	4.53
-15.0	-16.0	5.13	5.10	5.08	5.05	5.05	5.03	5.00
-12.0	-13.0	5.55	5.52	5.47	5.47	5.45	5.42	5.37
-9.0	-10.0	5.99	5.94	5.92	5.89	5.87	5.84	5.79
-7.0	-8.0	6.29	6.26	6.22	6.19	6.17	6.12	6.07
-5.0	-6.0	6.61	6.56	6.51	6.49	6.46	6.41	6.24
-3.0	-4.0	6.93	6.88	6.83	6.81	6.78	6.74	6.24
-1.0	-2.0	7.28	7.23	7.16	7.13	7.11	6.76	6.24
0.0	-1.0	7.45	7.38	7.33	7.30	7.26	6.76	6.24
2.0	1.0	7.78	7.73	7.65	7.53	7.28	6.76	6.24
5.0	4.0	8.32	8.25	7.80	7.53	7.28	6.76	6.24
7.0	6.0	8.67	8.32	7.80	7.53	7.28	6.76	6.24
9.0	7.8	8.84	8.32	7.80	7.53	7.28	6.76	6.24
12.0	10.6	8.84	8.32	7.80	7.53	7.28	6.76	6.24
15.0	13.5	8.84	8.32	7.80	7.53	7.28	6.76	6.24

■ MODEL : AS∗A30

Outdoor Temperature		Indoor temperature						
		16°CDB	18°CDB	20°CDB	21°CDB	22°CDB	24°CDB	26°CDB
(°CDB)	(°CWB)	TC	TC	TC	TC	TC	TC	TC
-19.3	-20.0	5.22	5.20	5.17	5.17	5.14	5.11	5.11
-15.0	-16.0	5.78	5.75	5.73	5.70	5.70	5.67	5.64
-12.0	-13.0	6.26	6.23	6.17	6.17	6.15	6.12	6.06
-9.0	-10.0	6.76	6.70	6.68	6.65	6.62	6.59	6.54
-7.0	-8.0	7.10	7.07	7.01	6.98	6.96	6.90	6.84
-5.0	-6.0	7.46	7.40	7.35	7.32	7.29	7.24	7.04
-3.0	-4.0	7.82	7.77	7.71	7.68	7.65	7.60	7.04
-1.0	-2.0	8.21	8.16	8.07	8.05	8.02	7.63	7.04
0.0	-1.0	8.41	8.33	8.27	8.24	8.19	7.63	7.04
2.0	1.0	8.77	8.72	8.63	8.49	8.21	7.63	7.04
5.0	4.0	9.39	9.30	8.80	8.49	8.21	7.63	7.04
7.0	6.0	9.78	9.39	8.80	8.49	8.21	7.63	7.04
9.0	7.8	9.97	9.39	8.80	8.49	8.21	7.63	7.04
12.0	10.6	9.97	9.39	8.80	8.49	8.21	7.63	7.04
15.0	13.5	9.97	9.39	8.80	8.49	8.21	7.63	7.04

TC : Total Capacity kW.

MODEL SELECTION

2-7-11. CEILING WALL TYPE (1/2)

■ MODEL : AW∗A07

Outdoor Temperature		Indoor temperature						
		16°CDB	18°CDB	20°CDB	21°CDB	22°CDB	24°CDB	26°CDB
(°CDB)	(°CWB)	TC	TC	TC	TC	TC	TC	TC
-19.3	-20.0	1.48	1.48	1.47	1.47	1.46	1.45	1.45
-15.0	-16.0	1.64	1.63	1.63	1.62	1.62	1.61	1.60
-12.0	-13.0	1.78	1.77	1.75	1.75	1.75	1.74	1.72
-9.0	-10.0	1.92	1.90	1.90	1.89	1.88	1.87	1.86
-7.0	-8.0	2.02	2.01	1.99	1.98	1.98	1.96	1.94
-5.0	-6.0	2.12	2.10	2.09	2.08	2.07	2.06	2.00
-3.0	-4.0	2.22	2.21	2.19	2.18	2.17	2.16	2.00
-1.0	-2.0	2.33	2.32	2.29	2.29	2.28	2.17	2.00
0.0	-1.0	2.39	2.37	2.35	2.34	2.33	2.17	2.00
2.0	1.0	2.49	2.48	2.45	2.41	2.33	2.17	2.00
5.0	4.0	2.67	2.64	2.50	2.41	2.33	2.17	2.00
7.0	6.0	2.78	2.67	2.50	2.41	2.33	2.17	2.00
9.0	7.8	2.83	2.67	2.50	2.41	2.33	2.17	2.00
12.0	10.6	2.83	2.67	2.50	2.41	2.33	2.17	2.00
15.0	13.5	2.83	2.67	2.50	2.41	2.33	2.17	2.00

■ MODEL : AW∗A09

Outdoor Temperature		Indoor temperature						
		16°CDB	18°CDB	20°CDB	21°CDB	22°CDB	24°CDB	26°CDB
(°CDB)	(°CWB)	TC	TC	TC	TC	TC	TC	TC
-19.3	-20.0	1.90	1.89	1.88	1.88	1.87	1.86	1.86
-15.0	-16.0	2.10	2.09	2.08	2.07	2.07	2.06	2.05
-12.0	-13.0	2.28	2.27	2.25	2.25	2.23	2.22	2.20
-9.0	-10.0	2.46	2.44	2.43	2.42	2.41	2.40	2.38
-7.0	-8.0	2.58	2.57	2.55	2.54	2.53	2.51	2.49
-5.0	-6.0	2.71	2.69	2.67	2.66	2.65	2.63	2.56
-3.0	-4.0	2.84	2.82	2.80	2.79	2.78	2.76	2.56
-1.0	-2.0	2.99	2.97	2.94	2.93	2.92	2.77	2.56
0.0	-1.0	3.06	3.03	3.01	3.00	2.98	2.77	2.56
2.0	1.0	3.19	3.17	3.14	3.09	2.99	2.77	2.56
5.0	4.0	3.41	3.38	3.20	3.09	2.99	2.77	2.56
7.0	6.0	3.56	3.41	3.20	3.09	2.99	2.77	2.56
9.0	7.8	3.63	3.41	3.20	3.09	2.99	2.77	2.56
12.0	10.6	3.63	3.41	3.20	3.09	2.99	2.77	2.56
15.0	13.5	3.63	3.41	3.20	3.09	2.99	2.77	2.56

■ MODEL : AW∗A12

Outdoor Temperature		Indoor temperature						
		16°CDB	18°CDB	20°CDB	21°CDB	22°CDB	24°CDB	26°CDB
(°CDB)	(°CWB)	TC	TC	TC	TC	TC	TC	TC
-19.3	-20.0	2.43	2.42	2.41	2.41	2.39	2.38	2.38
-15.0	-16.0	2.69	2.68	2.67	2.66	2.66	2.64	2.63
-12.0	-13.0	2.92	2.90	2.88	2.88	2.86	2.85	2.82
-9.0	-10.0	3.15	3.12	3.11	3.10	3.08	3.07	3.05
-7.0	-8.0	3.31	3.29	3.27	3.25	3.24	3.21	3.19
-5.0	-6.0	3.48	3.45	3.42	3.41	3.40	3.37	3.28
-3.0	-4.0	3.64	3.62	3.59	3.58	3.57	3.54	3.28
-1.0	-2.0	3.83	3.80	3.76	3.75	3.74	3.55	3.28
0.0	-1.0	3.92	3.88	3.85	3.84	3.81	3.55	3.28
2.0	1.0	4.09	4.06	4.02	3.96	3.83	3.55	3.28
5.0	4.0	4.37	4.33	4.10	3.96	3.83	3.55	3.28
7.0	6.0	4.56	4.37	4.10	3.96	3.83	3.55	3.28
9.0	7.8	4.65	4.37	4.10	3.96	3.83	3.55	3.28
12.0	10.6	4.65	4.37	4.10	3.96	3.83	3.55	3.28
15.0	13.5	4.65	4.37	4.10	3.96	3.83	3.55	3.28

■ MODEL : AW∗A14

Outdoor Temperature		Indoor temperature						
		16°CDB	18°CDB	20°CDB	21°CDB	22°CDB	24°CDB	26°CDB
(°CDB)	(°CWB)	TC	TC	TC	TC	TC	TC	TC
-19.3	-20.0	2.91	2.89	2.88	2.88	2.86	2.85	2.85
-15.0	-16.0	3.22	3.20	3.19	3.17	3.17	3.16	3.14
-12.0	-13.0	3.48	3.47	3.44	3.44	3.42	3.41	3.38
-9.0	-10.0	3.76	3.73	3.72	3.70	3.69	3.67	3.64
-7.0	-8.0	3.95	3.94	3.90	3.89	3.87	3.84	3.81
-5.0	-6.0	4.15	4.12	4.09	4.08	4.06	4.03	3.92
-3.0	-4.0	4.36	4.32	4.29	4.28	4.26	4.23	3.92
-1.0	-2.0	4.57	4.54	4.50	4.48	4.46	4.25	3.92
0.0	-1.0	4.68	4.64	4.60	4.59	4.56	4.25	3.92
2.0	1.0	4.88	4.85	4.81	4.73	4.57	4.25	3.92
5.0	4.0	5.23	5.18	4.90	4.73	4.57	4.25	3.92
7.0	6.0	5.44	5.23	4.90	4.73	4.57	4.25	3.92
9.0	7.8	5.55	5.23	4.90	4.73	4.57	4.25	3.92
12.0	10.6	5.55	5.23	4.90	4.73	4.57	4.25	3.92
15.0	13.5	5.55	5.23	4.90	4.73	4.57	4.25	3.92

TC : Total Capacity kW.

MODEL SELECTION

2-7-11. CEILING WALL TYPE (2/2)

■ MODEL : AW∗A18

Outdoor Temperature		Indoor temperature						
		16°CDB	18°CDB	20°CDB	21°CDB	22°CDB	24°CDB	26°CDB
(°CDB)	(°CWB)	TC	TC	TC	TC	TC	TC	TC
-19.3	-20.0	3.32	3.31	3.29	3.29	3.27	3.25	3.25
-15.0	-16.0	3.68	3.66	3.64	3.63	3.63	3.61	3.59
-12.0	-13.0	3.98	3.96	3.93	3.93	3.91	3.89	3.86
-9.0	-10.0	4.30	4.27	4.25	4.23	4.21	4.20	4.16
-7.0	-8.0	4.52	4.50	4.46	4.44	4.43	4.39	4.36
-5.0	-6.0	4.75	4.71	4.68	4.66	4.64	4.60	4.48
-3.0	-4.0	4.98	4.94	4.91	4.89	4.87	4.84	4.48
-1.0	-2.0	5.23	5.19	5.14	5.12	5.10	4.85	4.48
0.0	-1.0	5.35	5.30	5.26	5.24	5.21	4.85	4.48
2.0	1.0	5.58	5.55	5.49	5.40	5.23	4.85	4.48
5.0	4.0	5.97	5.92	5.60	5.40	5.23	4.85	4.48
7.0	6.0	6.22	5.97	5.60	5.40	5.23	4.85	4.48
9.0	7.8	6.35	5.97	5.60	5.40	5.23	4.85	4.48
12.0	10.6	6.35	5.97	5.60	5.40	5.23	4.85	4.48
15.0	13.5	6.35	5.97	5.60	5.40	5.23	4.85	4.48

■ MODEL : AW∗A24

Outdoor Temperature		Indoor temperature						
		16°CDB	18°CDB	20°CDB	21°CDB	22°CDB	24°CDB	26°CDB
(°CDB)	(°CWB)	TC	TC	TC	TC	TC	TC	TC
-19.3	-20.0	4.63	4.61	4.58	4.58	4.56	4.53	4.53
-15.0	-16.0	5.13	5.10	5.08	5.05	5.05	5.03	5.00
-12.0	-13.0	5.55	5.52	5.47	5.47	5.45	5.42	5.37
-9.0	-10.0	5.99	5.94	5.92	5.89	5.87	5.84	5.79
-7.0	-8.0	6.29	6.26	6.22	6.19	6.17	6.12	6.07
-5.0	-6.0	6.61	6.56	6.51	6.49	6.46	6.41	6.24
-3.0	-4.0	6.93	6.88	6.83	6.81	6.78	6.74	6.24
-1.0	-2.0	7.28	7.23	7.16	7.13	7.11	6.76	6.24
0.0	-1.0	7.45	7.38	7.33	7.30	7.26	6.76	6.24
2.0	1.0	7.78	7.73	7.65	7.53	7.28	6.76	6.24
5.0	4.0	8.32	8.25	7.80	7.53	7.28	6.76	6.24
7.0	6.0	8.67	8.32	7.80	7.53	7.28	6.76	6.24
9.0	7.8	8.84	8.32	7.80	7.53	7.28	6.76	6.24
12.0	10.6	8.84	8.32	7.80	7.53	7.28	6.76	6.24
15.0	13.5	8.84	8.32	7.80	7.53	7.28	6.76	6.24

■ MODEL : AW∗A30

Outdoor Temperature		Indoor temperature						
		16°CDB	18°CDB	20°CDB	21°CDB	22°CDB	24°CDB	26°CDB
(°CDB)	(°CWB)	TC	TC	TC	TC	TC	TC	TC
-19.3	-20.0	5.22	5.20	5.17	5.17	5.14	5.11	5.11
-15.0	-16.0	5.78	5.75	5.73	5.70	5.70	5.67	5.64
-12.0	-13.0	6.26	6.23	6.17	6.17	6.15	6.12	6.06
-9.0	-10.0	6.76	6.70	6.68	6.65	6.62	6.59	6.54
-7.0	-8.0	7.10	7.07	7.01	6.98	6.96	6.90	6.84
-5.0	-6.0	7.46	7.40	7.35	7.32	7.29	7.24	7.04
-3.0	-4.0	7.82	7.77	7.71	7.68	7.65	7.60	7.04
-1.0	-2.0	8.21	8.16	8.07	8.05	8.02	7.63	7.04
0.0	-1.0	8.41	8.33	8.27	8.24	8.19	7.63	7.04
2.0	1.0	8.77	8.72	8.63	8.49	8.21	7.63	7.04
5.0	4.0	9.39	9.30	8.80	8.49	8.21	7.63	7.04
7.0	6.0	9.78	9.39	8.80	8.49	8.21	7.63	7.04
9.0	7.8	9.97	9.39	8.80	8.49	8.21	7.63	7.04
12.0	10.6	9.97	9.39	8.80	8.49	8.21	7.63	7.04
15.0	13.5	9.97	9.39	8.80	8.49	8.21	7.63	7.04

TC : Total Capacity kW.

Refrigerant R410A
INVERTER

AIRSTAGE™
V SERIES

3. OUTDOOR UNITS

3-1. MODEL LINE UP

■ LINE UP

Type	Capacity	Model name
Master	22.4kW (8HP)	AJ✱A72LBTF
	28.0kW (10HP)	AJ✱A90LBTF
	40.0kW (14HP)	AJ✱126LBTF
Slave	22.4kW (8HP)	AJ✱A72UBTF
	28.0kW (10HP)	AJ✱A90UBTF
	40.0kW (14HP)	AJ✱126UBTF

OUTDOOR UNITS

Note : By selecting DIP-SW, refrigerant system allow to use, for either "Heat pump" (Cooling and Heating) or "Cooling only" operation.

✱ For using "Cooling only", set the DIP-SW on outdoor unit and individual remote controller (wired, simple) for blocking heating function.

■ REFRIGERANT R410A

■ CAPACITY RANGE

HP	Capacity (kW)	Operating capacity of indoor unit (kW)	✱3 Maximum connectable indoor unit	Indoor unit connectable capacity (kW)	
8	22.4	2.20 to 33.6	15	11.2 to 33.6	✱1 ✱2 50% to 150%
10	28.0	2.20 to 42.0	16	14.0 to 42.0	
14	40.0	2.20 to 60.0		20.0 to 60.0	
16	44.8	2.20 to 67.2	30	22.4 to 67.2	✱1 50% to 150%
18	50.4	2.20 to 75.6	32	25.2 to 75.6	
20	56.0	2.20 to 84.0		28.0 to 84.0	
22	62.4	2.20 to 93.6		31.2 to 93.6	
24	68.0	2.20 to 102		34.0 to 102	
26	72.8	2.20 to 109		36.4 to 109	
28	80.0	2.20 to 120		40.0 to 120	
30	84.0	2.20 to 126	48	42.0 to 126	
32	90.4	2.20 to 135		45.2 to 135	
34	96.0	2.20 to 144		48.0 to 144	
36	102	2.20 to 153		51.0 to 153	
38	108	2.20 to 162		54.0 to 162	
42	120	2.20 to 180		60.0 to 180	

✱1 Based on rated cooling capacity.

✱2 Indoor unit connectable capacity is 75 to 150% for single outdoor unit system (8-14HP) in case of including indoor unit model code 18 and under in the system.

✱3 Minimum connectable indoor unit number is 2.
However ARXC90 can be used single connection.

■ MODEL DESIGNATION

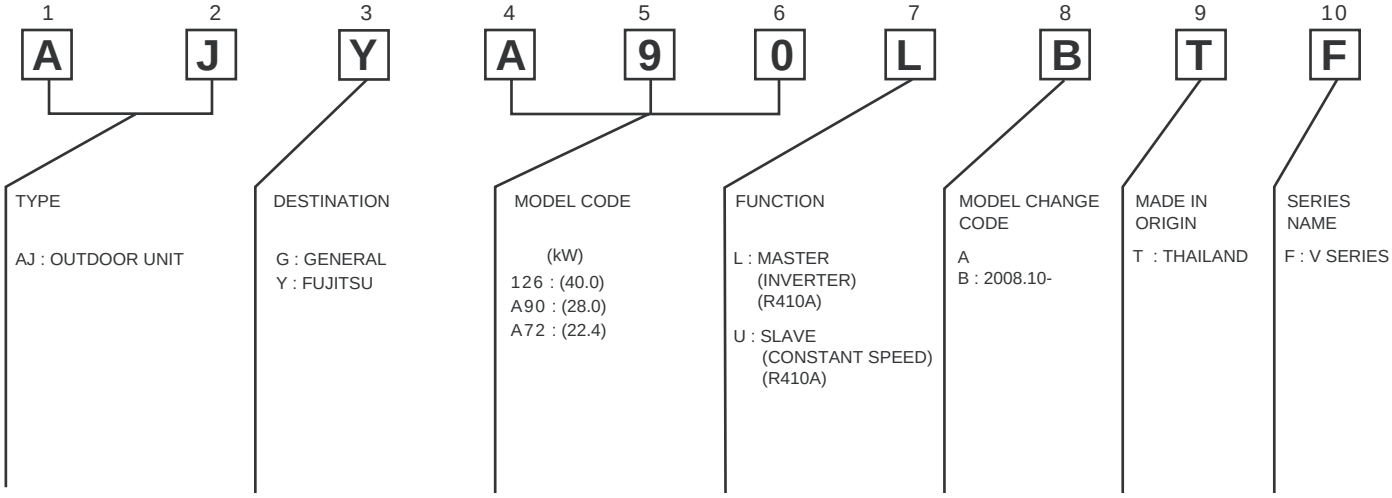

OUTDOOR UNITS

3-2. SPECIFICATIONS

● Master type

Nominal system capacity			HP	8	10	14
Model name				AJ*A72LBTF	AJ*A90LBTF	AJ*126LBTF
Power source				3N ~ 400 V, 50Hz		
Available voltage range				342 to 456V		
Capacity	Cooling		kW	22.4	28.0	40.0
	Heating			25.0	31.5	45.0
Input power	Cooling		kW	7.00	8.75	13.3
	Heating			6.76	8.51	13.2
Current	Cooling		A	12.5	15.6	23.8
	Heating			12.0	15.2	23.6
Starting current				99	99	114
EER	Cooling		W / W	3.20	3.20	3.00
COP	Heating			3.70	3.70	3.40
Fan	Airflow rate	High	m^3 / h	10,700	10,700	10,800
	Type x Number			Propeller × 2		
	Motor output		W	150 × 2	150 × 2	250 × 2
Sound pressure level	Cooling	High	dB(A)	58	58	60
		Low		50	50	54
	Heating	High		60	60	62
Heat exchanger	Dimensions (H x W x D)		mm	(1,150 x 882 x 36.38) x 2	(1,150 x 882 x 36.38) x 2	(1,150 x 882 x 54.57) x 2
	Fin pitch			1.45		
	Rows x Stages			(2 x 42) x 2	(2 x 42) x 2	(3 x 42) x 2
	Pipe type			Copper		
	Fin	Type		Aluminium		
		Surface treatment		Corrosion resistance (Blue fin)		
Compressor	Type			Inv. + Const.	Inv. + Const.	Inv. + Const. × 2
	Motor output		kW	3.0 + 4.6	3.0 + 4.6	3.0 + 4.6 x 2
Refrigerant	Type			R410A		
	Charge		kg	11.8	11.8	11.8
Refrigerant oil	Type			MEL56		
	Charge		cc	1,700 + 1,350 + 1,000	1,700 + 1,350 + 1,000	1,700 + 1,350 × 2 + 1,000
Enclosure	Material			Painted galvanized steel		
	Colour			Beige(10YR 7.5/1.0NN)		
Dimensions (H x W x D)	Net		mm	1,500 × 1,300 × 650	1,500 × 1,300 × 650	1,500 × 1,300 × 650
	Gross			1,690 × 1,450 × 750	1,690 × 1,450 × 750	1,690 × 1,450 × 750
Weight	Net		kg	267	267	371
	Gross			302	302	406
Connection pipe	Size	Liquid	mm	12.70	12.70	12.70
		Gas		22.22	22.22	28.58
		Oil		6.35	6.35	6.35
	Method	Liquid		Flare		
		Gas		Flange		
	Max. length		m	150		
	Max. height difference			50 / 40 (Outdoor unit : Upper / Lower)		
Operation temperature range	Cooling		°C	-15 to 43 *1)		
	Heating			-20 to 21		
Connectable indoor units			Number	15	16	16

Note : Specifications are based on the following conditions.
Cooling : Indoor temperature of 27°CDB / 19°CWB, and outdoor temperature of 35°CDB / 24°CWB.
Heating : Indoor temperature of 20°CDB / (15°CWB), and outdoor temperature of 7°CDB / 6°CWB.
Pipe length : 7.5 m; Height difference between outdoor unit and indoor unit : 0 m.
*1) Combination use (16HP to 42HP) : -5 to 43°C.

● Slave type

Nominal system capacity			HP	8	10	14
Model name				AJ*A72UBTF	AJ*A90UBTF	AJ*126UBTF
Power source				3N ~ 400 V, 50Hz		
Available voltage range				342 to 456V		
Capacity	Cooling		kW	(22.4)	(28.0)	(40.0)
	Heating			(25.0)	(31.5)	(45.0)
Input power	Cooling		kW	(7.00)	(8.75)	(13.3)
	Heating			(6.76)	(8.51)	(13.2)
Current	Cooling		A	(12.5)	(15.6)	(23.8)
	Heating			(12.0)	(15.2)	(23.6)
Starting current				84	102	117
EER	Cooling		W / W	—	—	—
COP	Heating			—	—	—
Fan	Airflow rate	High	m^3 / h	10,700	10,700	10,800
	Type x Number			Propeller × 2		
	Motor output		W	150 × 2	150 × 2	250 × 2
Sound pressure level	Cooling	High	dB(A)	58	58	60
		Low		55	55	57
	Heating	High		60	60	62
Heat exchanger	Dimensions (H x W x D)		mm	(1,150 x 882 x 36.38) x 2	(1,150 x 882 x 36.38) x 2	(1,150 x 882 x 54.57) x 2
	Fin pitch			1.45		
	Rows x Stages			(2 x 42) x 2	(2 x 42) x 2	(3 x 42) x 2
	Pipe type			Copper		
	Fin	Type		Aluminium		
		Surface treatment		Corrosion resistance (Blue fin)		
Compressor	Type			Const. × 2	Const. × 2	Const. × 3
	Motor output		kW	3.7 x 2	4.6 x 2	4.6 x 3
Refrigerant	Type			R410A		
	Charge		kg	11.8	11.8	11.8
Refrigerant oil	Type			MEL56		
	Charge		cc	1,350 × 2 + 1,000	1,350 × 2 + 1,000	1,350 × 3 + 1,000
Enclosure	Material			Painted galvanized steel		
	Colour			Beige(10YR 7.5/1.0NN)		
Dimensions (H x W x D)	Net		mm	1,500 × 1,300 × 650	1,500 × 1,300 × 650	1,500 × 1,300 × 650
	Gross			1,690 × 1,450 × 750	1,690 × 1,450 × 750	1,690 × 1,450 × 750
Weight	Net		kg	270	270	374
	Gross			305	305	409
Connection pipe	Size	Liquid	mm	12.70	12.70	12.70
		Gas		22.22	22.22	28.58
		Oil		6.35	6.35	6.35
	Method	Liquid		Flare		
		Gas		Flange		

Note : Specifications are based on the following conditions.

Cooling : Indoor temperature of 27°CDB / 19°CWB, and outdoor temperature of 35°CDB / 24°CWB.

Heating : Indoor temperature of 20°CDB / (15°CWB), and outdoor temperature of 7°CDB / 6°CWB.

Pipe length : 7.5 m; Height difference between outdoor unit and indoor unit : 0 m.

● Combination type

Nominal system capacity			HP	16	18	20	22
Model name				AJ*A72LBTF AJ*A72UBTF	AJ*A90LBTF AJ*A72UBTF	AJ*A90LBTF AJ*A90UBTF	AJ*126LBTF AJ*A72UBTF
Power source				3N ~ 400 V, 50Hz			
Available voltage range				342 to 456 V			
Capacity	Cooling		kW	44.8	50.4	56.0	62.4
	Heating			50.0	56.5	63.0	70.0
Input power	Cooling		kW	14.0	15.8	17.5	20.3
	Heating			13.5	15.3	17.0	20.0
Current	Cooling		A	24.9	28.1	31.2	36.2
	Heating			24.1	27.2	30.3	35.6
Starting current				111	111	129	127
EER	Cooling		W / W	3.20	3.20	3.20	3.07
COP	Heating			3.70	3.70	3.70	3.50
Fan	Airflow rate	High	m^3 / h	10,700 × 2	10,700 × 2	10,700 × 2	10,800 / 10,700
	Type x Number			Propeller × 4			
	Motor output		W	150 × 4	150 × 4	150 × 4	250 × 2 / 150 × 2
Sound pressure level	Cooling	High	dB(A)	61	61	61	62
		Low		56	56	56	57
	Heating	High		63	63	63	64
Heat exchanger	Dimensions (H x W x D)		mm	(1,150 x 882 x 36.38) x 4	(1,150 x 882 x 36.38) x 4	(1,150 x 882 x 36.38) x 4	(1,150 x 882 x 54.57) x 2 / (1,150 x 882 x 36.38) x 2
	Fin pitch			1.45			
	Rows x Stages			(2 x 42) x 4	(2 x 42) x 4	(2 x 42) x 4	(3 x 42) x 2 / (2 x 42) x 2
	Pipe type			Copper			
	Fin	Type		Aluminium			
		Surface treatment		Corrosion resistance (Blue fin)			
Compressor	Type			Inv. + Const. × 3	Inv. + Const. × 3	Inv. + Const. × 3	Inv. + Const. × 4
	Motor output		kW	3.0 + 3.7 x 2 + 4.6	3.0 + 3.7 x 2 + 4.6	3.0 + 4.6 x 3	3.0 + 3.7 x 2 + 4.6 x 2
Refrigerant	Type			R410A			
	Charge		kg	11.8 + 11.8	11.8 + 11.8	11.8 + 11.8	11.8 + 11.8
Refrigerant oil	Type			MEL56			
	Charge		cc	1,700 + 1,350 + 1,000 / 1,350 × 2 + 1,000	1,700 + 1,350 + 1,000 / 1,350 × 2 + 1,000	1,700 + 1,350 + 1,000 / 1,350 × 2 + 1,000	1,700 + 1,350 × 2 + 1,000 / 1,350 × 2 + 1,000
Enclosure	Material			Painted galvanized steel			
	Colour			Beige(10YR 7.5/1.0NN)			
Dimensions (H x W x D)	Net		mm	(1,500 × 1,300 × 650) x 2	(1,500 × 1,300 × 650) x 2	(1,500 × 1,300 × 650) x 2	(1,500 × 1,300 × 650) x 2
	Gross			(1,690 × 1,450 × 750) x 2	(1,690 × 1,450 × 750) x 2	(1,690 × 1,450 × 750) x 2	(1,690 × 1,450 × 750) x 2
Weight	Net		kg	267 + 270	267 + 270	267 + 270	371 + 270
	Gross			302 + 305	302 + 305	302 + 305	406 + 305
Connection pipe	Size	Liquid	mm	12.70	15.88	15.88	15.88
		Gas		28.58	28.58	28.58	34.92
		Oil		6.35	6.35	6.35	6.35
	Method	Liquid		Braze			
		Gas		Braze			
	Max. length		m	150			
	Max. height difference			50 / 40 (Outdoor unit : Upper / Lower)			
Operation temperature range	Cooling		°C	-5 to 43			
	Heating			-20 to 21			
Connectable indoor units			Number	30	32		

Note : Specifications are based on the following conditions.

Cooling : Indoor temperature of 27°CDB / 19°CWB, and outdoor temperature of 35°CDB / 24°CWB.

Heating : Indoor temperature of 20°CDB / (15°CWB), and outdoor temperature of 7°CDB / 6°CWB.

Pipe length : 7.5 m; Height difference between outdoor unit and indoor unit : 0 m.

● Combination type

Nominal system capacity			HP	24	26	28
Model name				AJ*126LBTF AJ*A90UBTF	AJ*A90LBTF AJ*A72UBTF AJ*A72UBTF	AJ*126LBTF AJ*126UBTF
Power source				3N ~ 400 V, 50Hz		
Available voltage range				342 to 456V		
Capacity	Cooling		kW	68.0	72.8	80.0
	Heating			76.5	81.5	90.0
Input power	Cooling		kW	22.1	22.8	26.7
	Heating			21.7	22.0	26.5
Current	Cooling		A	39.4	40.5	47.5
	Heating			38.8	39.3	47.2
Starting current				145	136	160
EER	Cooling		W / W	3.08	3.20	3.00
COP	Heating			3.52	3.70	3.40
Fan	Airflow rate	High	m^3 / h	10,800 / 10,700	10,700 × 3	10,800 × 2
	Type x Number			Propeller × 4	Propeller × 6	Propeller × 4
	Motor output		W	250 × 2 / 150 × 2	150 × 6	250 × 4
Sound pressure level	Cooling	High	dB(A)	62	62	62
		Low		57	58	58
	Heating	High		64	64	64
Heat exchanger	Dimensions (H x W x D)		mm	(1,150 x 882 x 54.57) x 2 / (1,150 x 882 x 36.38) x 2	(1,150 x 882 x 36.38) x 6	(1,150 x 882 x 54.57) x 4
	Fin pitch			1.45		
	Rows x Stages			(3 x 42) x 2 / (2 x 42) x 2	(2 x 42) x 6	(3 x 42) x 4
	Pipe type			Copper		
	Fin	Type		Aluminium		
		Surface treatment		Corrosion resistance (Blue fin)		
Compressor	Type			Inv. + Const. × 4	Inv. + Const. × 5	Inv. + Const. × 5
	Motor output		kW	3.0 + 4.6 x 4	3.0 +3.7 x 4 + 4.6	3.0 + 4.6 x 5
Refrigerant	Type			R410A		
	Charge		kg	11.8 + 11.8	11.8 + 11.8 + 11.8	11.8 + 11.8
Refrigerant oil	Type			MEL56		
	Charge		cc	1,700 + 1,350 × 2 + 1,000 / 1,350 × 2 + 1,000	1,700 + 1,350 + 1,000 / 1,350 × 2 + 1,000 / 1,350 × 2 + 1,000	1,700 + 1,350 × 2 + 1,000 / 1,350 × 3 + 1,000
Enclosure	Material			Painted galvanized steel		
	Colour			Beige(10YR 7.5/1.0NN)		
Dimensions (H x W x D)	Net		mm	(1,500 × 1,300 × 650) x 2	(1,500 × 1,300 × 650) x 3	(1,500 × 1,300 × 650) x 2
	Gross			(1,690 × 1,450 × 750) x 2	(1,690 × 1,450 × 750) x 3	(1,690 × 1,450 × 750) x 2
Weight	Net		kg	371 + 270	267 + 270 + 270	371 + 374
	Gross			406 + 305	302 + 305 + 305	406 + 409
Connection pipe	Size	Liquid	mm	15.88	15.88	15.88
		Gas		34.92	34.92	34.92
		Oil		6.35	6.35	6.35
	Method	Liquid		Braze		
		Gas		Braze		
	Max. length		m	150		
	Max. height difference			50 / 40 (Outdoor unit : Upper / Lower)		
Operation temperature range	Cooling		°C	-5 to 43		
	Heating			-20 to 21		
Connectable indoor units			Number	32		

Note : Specifications are based on the following conditions.

Cooling : Indoor temperature of 27°CDB / 19°CWB, and outdoor temperature of 35°CDB / 24°CWB.

Heating : Indoor temperature of 20°CDB / (15°CWB), and outdoor temperature of 7°CDB / 6°CWB.

Pipe length : 7.5 m; Height difference between outdoor unit and indoor unit : 0 m.

OUTDOOR UNITS

● Combination type

Nominal system capacity			HP	30	32	34
Model name				AJ*A90LBTF AJ*A90UBTF AJ*A90UBTF	AJ*126LBTF AJ*A90UBTF AJ*A72UBTF	AJ*126LBTF AJ*A90UBTF AJ*A90UBTF
Power source				3N ~ 400 V, 50Hz		
Available voltage range				342 to 456V		
Capacity	Cooling		kW	84.0	90.4	96.0
	Heating			94.5	102	108
Input power	Cooling		kW	26.3	29.1	30.8
	Heating			25.5	28.5	30.3
Current	Cooling		A	46.8	51.8	54.9
	Heating			45.5	50.8	53.9
Starting current				159	157	175
EER	Cooling		W / W	3.20	3.11	3.11
COP	Heating			3.70	3.56	3.57
Fan	Airflow rate	High	m^3 / h	10,700 × 3	10,800 / 10,700 × 2	10,800 / 10,700 × 2
	Type x Number			Propeller × 6		
	Motor output		W	150 × 6	250 × 2 / 150 × 4	250 × 2 / 150 × 4
Sound pressure level	Cooling	High	dB(A)	62	63	63
		Low		58	59	59
	Heating	High		64	65	65
Heat exchanger	Dimensions (H x W x D)		mm	(1,150 x 882 x 36.38) x 6	(1,150 x 882 x 54.57) x 2 / (1,150 x 882 x 36.38) x 4	(1,150 x 882 x 54.57) x 2 / (1,150 x 882 x 36.38) x 4
	Fin pitch			1.45		
	Rows x Stages			(2 x 42) x 6	(3 x 42) x 2 / (2 x 42) x 4	(3 x 42) x 2 / (2 x 42) x 4
	Pipe type			Copper		
	Fin	Type		Aluminium		
		Surface treatment		Corrosion resistance (Blue fin)		
Compressor	Type			Inv. + Const. × 5	Inv. + Const. × 6	Inv. + Const. × 6
	Motor output		kW	3.0 + 4.6 x 5	3.0 + 3.7 x 2 + 4.6 x 4	3.0 + 4.6 x 6
Refrigerant	Type			R410A		
	Charge		kg	11.8 + 11.8 + 11.8	11.8 + 11.8 + 11.8	11.8 + 11.8 + 11.8
Refrigerant oil	Type			MEL56		
	Charge		cc	1,700 + 1,350 + 1,000 / 1,350 × 2 + 1,000 / 1,350 × 2 + 1,000	1,700 + 1,350 × 2 + 1,000 / 1,350 × 2 + 1,000 / 1,350 × 2 + 1,000	1,700 + 1,350 × 2 + 1,000 / 1,350 × 2 + 1,000 / 1,350 × 2 + 1,000
Enclosure	Material			Painted galvanized steel		
	Colour			Beige(10YR 7.5/1.0NN)		
Dimensions (H x W x D)	Net		mm	(1,500 × 1,300 × 650) x 3	(1,500 × 1,300 × 650) x 3	(1,500 × 1,300 × 650) x 3
	Gross			(1,690 × 1,450 × 750) x 3	(1,690 × 1,450 × 750) x 3	(1,690 × 1,450 × 750) x 3
Weight	Net		kg	267 + 270 + 270	371 + 270 + 270	371 + 270 + 270
	Gross			302 + 305 + 305	406 + 305 + 305	406 + 305 + 305
Connection pipe	Size	Liquid	mm	19.05	19.05	19.05
		Gas		34.92	34.92	34.92
		Oil		6.35	6.35	6.35
	Method	Liquid		Braze		
		Gas		Braze		
	Max. length		m	150		
	Max. height difference			50 / 40 (Outdoor unit : Upper / Lower)		
Operation temperature range	Cooling		°C	-5 to 43		
	Heating			-20 to 21		
Connectable indoor units			Number	48		

Note : Specifications are based on the following conditions.

Cooling : Indoor temperature of 27°CDB / 19°CWB, and outdoor temperature of 35°CDB / 24°CWB.

Heating : Indoor temperature of 20°CDB / (15°CWB), and outdoor temperature of 7°CDB / 6°CWB.

Pipe length : 7.5 m; Height difference between outdoor unit and indoor unit : 0 m.

OUTDOOR UNITS

● Combination type

Nominal system capacity			HP	36	38	42
Model name				AJ*126LBTF AJ*126UBTF AJ*A72UBTF	AJ*126LBTF AJ*126UBTF AJ*A90UBTF	AJ*126LBTF AJ*126UBTF AJ*126UBTF
Power source				3N ~ 400 V, 50Hz		
Available voltage range				342 to 456 V		
Capacity	Cooling		kW	102	108	120
	Heating			115	122	135
Input power	Cooling		kW	33.7	35.4	40.0
	Heating			33.2	35.0	39.7
Current	Cooling		A	60.0	63.1	71.3
	Heating			59.2	62.3	70.8
Starting current				173	190	206
EER	Cooling		W / W	3.04	3.05	3.00
COP	Heating			3.27	3.47	3.40
Fan	Airflow rate	High	m^3 / h	10,800 × 2 / 10,700	10,800 × 2 / 10,700	10,800 × 3
	Type x Number			Propeller × 6		
	Motor output		W	250 × 4 / 150 × 2	250 × 4 / 150 × 2	250 × 6
Sound pressure level	Cooling	High	dB(A)	63	64	64
		Low		60	60	61
	Heating	High		65	66	66
Heat exchanger	Dimensions (H x W x D)		mm	(1,150 x 882 x 54.57) x 4 / (1,150 x 882 x 36.38) x 2	(1,150 x 882 x 54.57) x 4 / (1,150 x 882 x 36.38) x 2	(1,150 x 882 x 54.57) x 6
	Fin pitch			1.45		
	Rows x Stages			(3 x 42) x 4 / (2 x 42) x 2	(3 x 42) x 4 / (2 x 42) x 2	(3 x 42) x 6
	Pipe type			Copper		
	Fin	Type		Aluminium		
		Surface treatment		Corrosion resistance (Blue fin)		
Compressor	Type			Inv. + Const. × 7	Inv. + Const. × 7	Inv. + Const. × 8
	Motor output		kW	3.0 + 3.7 x 2 + 4.6 x 5	3.0 + 4.6 x 7	3.0 + 4.6 x 8
Refrigerant	Type			R410A		
	Charge		kg	11.8 + 11.8 + 11.8	11.8 + 11.8 + 11.8	11.8 + 11.8 + 11.8
Refrigerant oil	Type			MEL56		
	Charge		cc	1,700 + 1,350 × 2 + 1,000 / 1,350 × 3 + 1,000 / 1,350 × 2 + 1,000	1,700 + 1,350 × 2 + 1,000 / 1,350 × 3 + 1,000 / 1,350 × 2 + 1,000	1,700 + 1,350 × 2 + 1,000 / 1,350 × 3 + 1,000 / 1,350 × 3 + 1,000
Enclosure	Material			Painted galvanized steel		
	Colour			Beige(10YR 7.5/1.0NN)		
Dimensions (H x W x D)	Net		mm	(1,500 × 1,300 × 650) x 3	(1,500 × 1,300 × 650) x 3	(1,500 × 1,300 × 650) x 3
	Gross			(1,690 × 1,450 × 750) x 3	(1,690 × 1,450 × 750) x 3	(1,690 × 1,450 × 750) x 3
Weight	Net		kg	371 + 374 + 270	371 + 374 + 270	371 + 374 + 374
	Gross			406 + 409 + 305	406 + 409 + 305	406 + 409 + 409
Connection pipe	Size	Liquid	mm	19.05	19.05	19.05
		Gas		41.27	41.27	41.27
		Oil		6.35	6.35	6.35
	Method	Liquid		Braze		
		Gas		Braze		
	Max. length		m	150		
	Max. height difference			50 / 40 (Outdoor unit : Upper / Lower)		
Operation temperature range	Cooling		°C	-5 to 43		
	Heating			-20 to 21		
Connectable indoor units			Number	48		

Note : Specifications are based on the following conditions.
Cooling : Indoor temperature of 27°CDB / 19°CWB, and outdoor temperature of 35°CDB / 24°CWB.
Heating : Indoor temperature of 20°CDB / (15°CWB), and outdoor temperature of 7°CDB / 6°CWB.
Pipe length : 7.5 m; Height difference between outdoor unit and indoor unit : 0 m.

OUTDOOR UNITS

3-3. DIMENSIONS

■ MODELS : AJ∗A72LBTF, AJ∗A90LBTF, AJ∗126LBTF
AJ∗A72UBTF, AJ∗A90UBTF, AJ∗126UBTF

(Unit : mm)

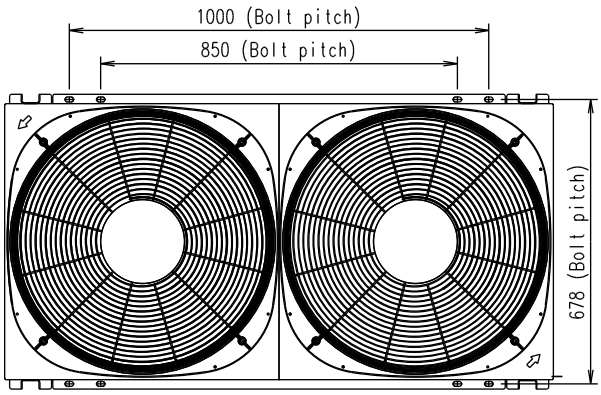

Top view

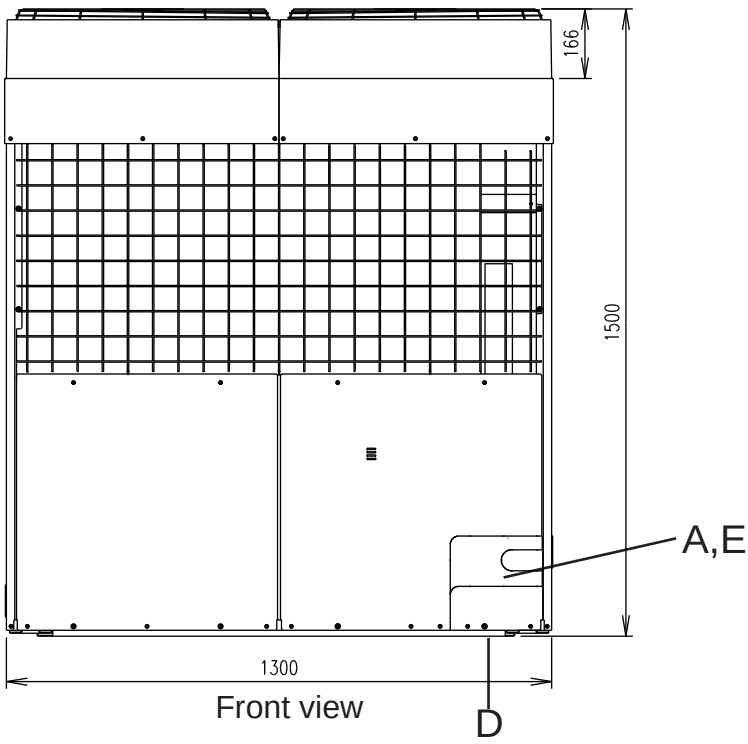

Front view

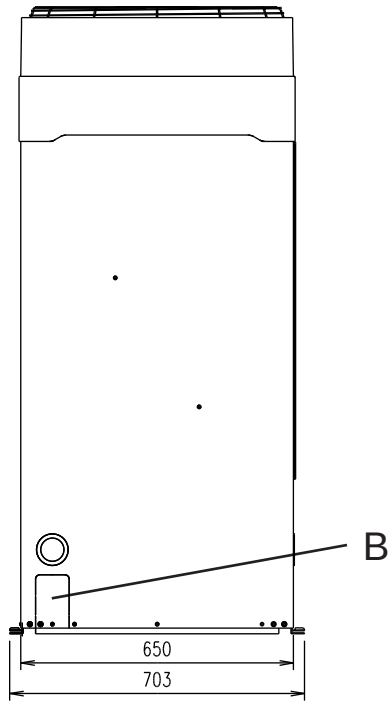

Right view

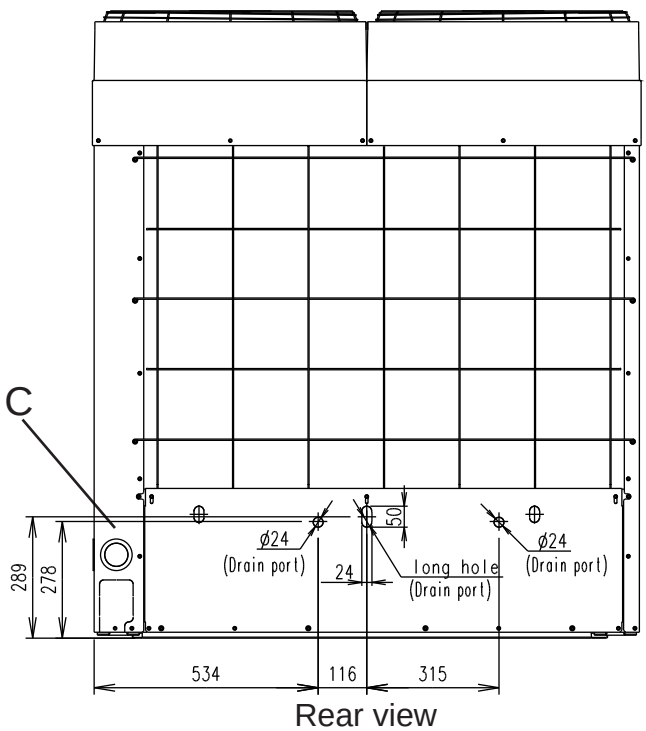

Rear view

OUTDOOR UNITS

OUTDOOR UNITS

(Unit : mm)

■ PIPING POSITION DETAIL

A

Front side knockout position

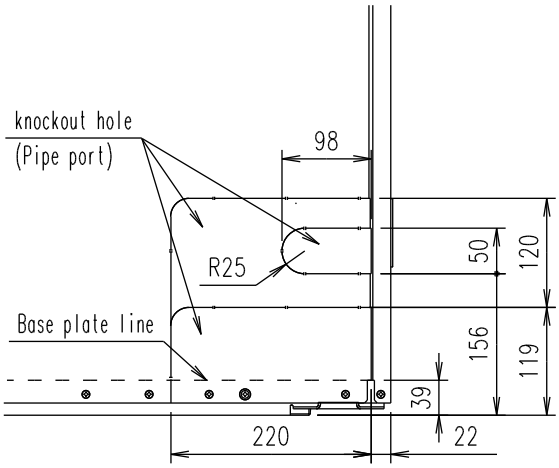

B

Right side knockout position

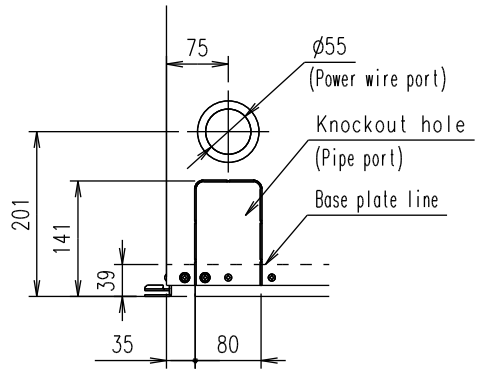

C

Rear side knockout position

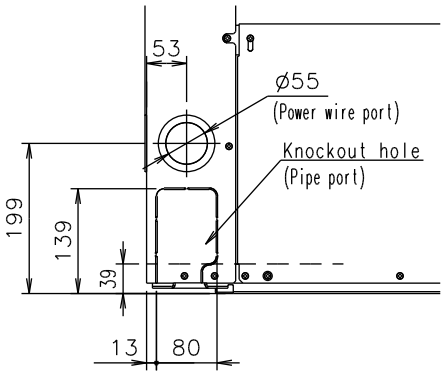

D

Base side knockout position
Top view

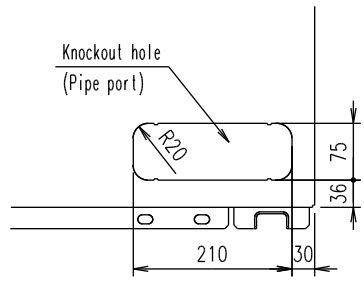

E

Valve position

Top view

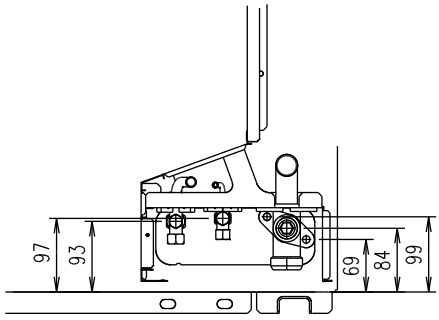

Front view

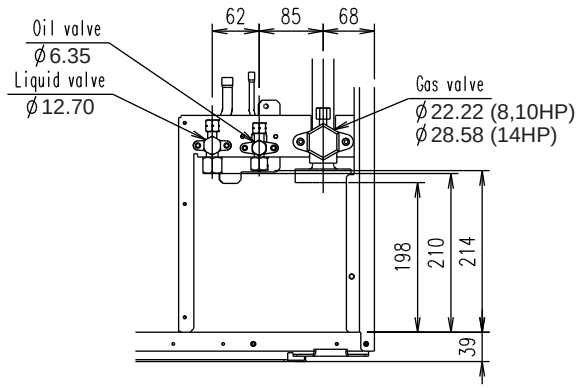

3-4. INSTALLATION SPACE

Be careful of the following issues for selecting position of outdoor unit.

- **Install with sufficient space when taking into consideration such as conveyance routes, installation space, walk space and maintenance.**
- **Observe the installation space specifications that are shown in the figures. If installation is not performed according to the specifications, it could cause a short circuit and result in a lack of performance. As a result, outdoor unit might be stopped by high-pressure protection easily.**
- **During installation, take into account the installation space required for the refrigerant piping space.**

OUTDOOR UNITS

■ SINGLE UNIT INSTALLATION

< Top view >

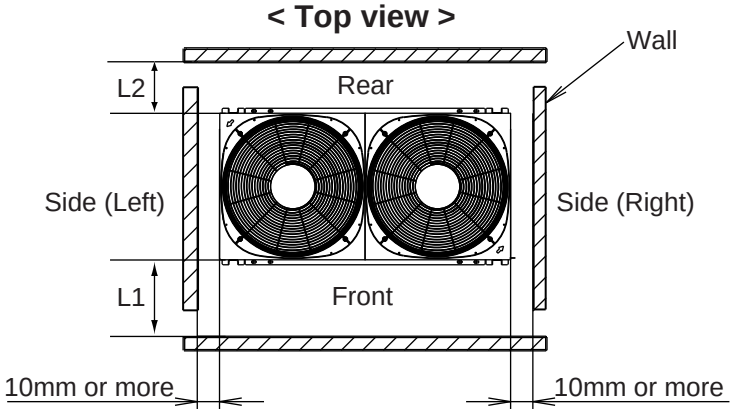

Minimum space requirement around the outdoor unit.

< Side view >

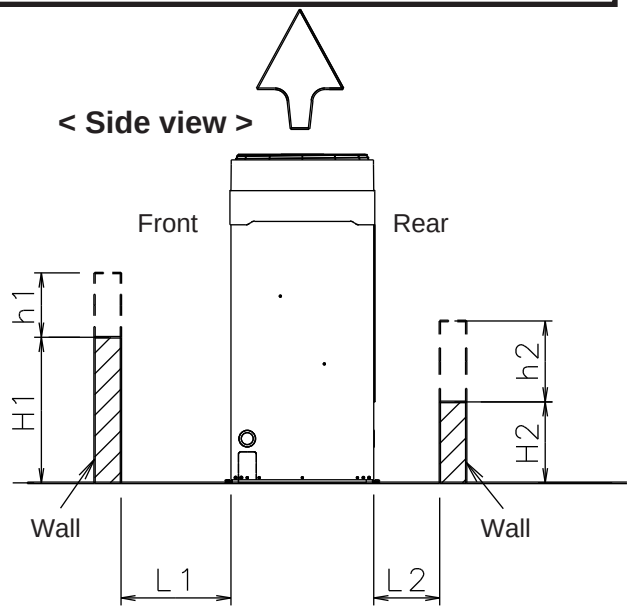

Minimum required space when there are walls, front and rear side.

- If H1 ≦ 600mm, then L1 ≧ 500mm
- If H2 ≦ 300mm, then L2 ≧ 300mm
- If H1 > 600mm, then L1 ≧ (500 + h1) mm
- If H2 > 300mm, then L2 ≧ (300 + h2) mm

● The installation space must be satisfied for each wall (front, rear, sides) are shown below.

- As a rule, there must be no obstructions on the blowing side of the fan. If there are obstructions on the blowing side of the fan, a discharge duct must be used.
- As a rule, the wall height on the front must be H1 (600mm) or less.
- As a rule, the wall height on the rear must be H2 (300mm) or less.
- There is no limit to the wall height on the sides.
- The sides of the unit and the walls must be separated by a distance of 10mm or more.
- If the distance from the sides of the unit to the walls is 150mm or less, the 6 screws on the right side of the unit must be removed before installation.
- If the wall height on the front exceeds H1 = 600mm, the distance h1 (the distance by which it exceeds H1) must be added to the L1 (500mm) service space.
- If the wall height on the rear exceeds H2 = 300mm, the distance h2 (the distance by which it exceeds H2) must be added to the L2 (300mm) service space.

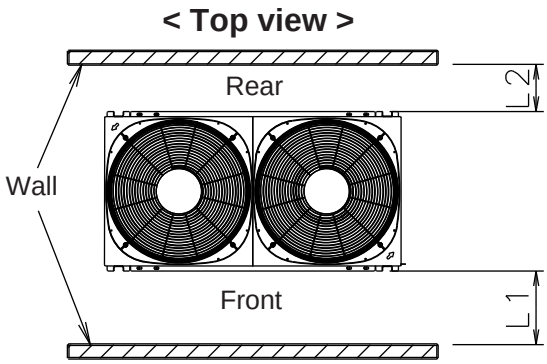

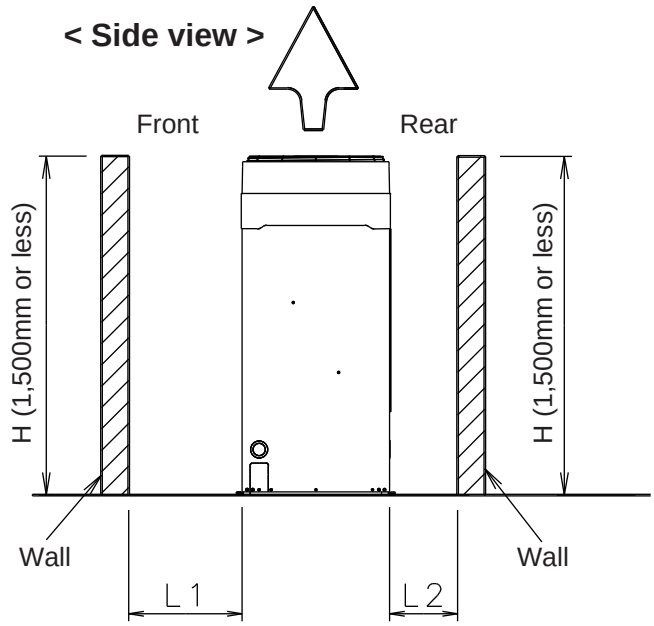

OUTDOOR UNITS

- If unit needs to install at a high front and rear wall height because of a small installation space:
  - ✳ As a rule, there must be no obstructions on the blowing side of the fan.
    If there are obstructions on the blowing side of the fan, a discharge duct must be used.
  - ✳ If space cannot be secured on the front and rear (L1<500mm + h1, L2<300mm+ h2), do not install walls on the sides.
  - ✳ The wall height on the front and rear must be 1,500mm or less.
  - ✳ A service space must be secured of L1 ≧ 500mm and L2 ≧ 300mm.
  - ✳ Construct louvers or other opening in the wall to ensure sufficient ventillation.

- If there is a high wall front or rear side :
  - ✳ Another side of front or rear must be open space.
  - ✳ At least 2 side must be opened.

■ SERIES CONNECTION

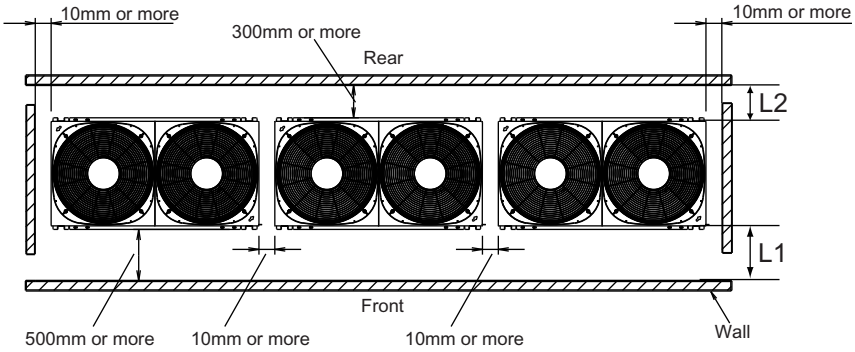

Minimum space requirement around the outdoor unit.

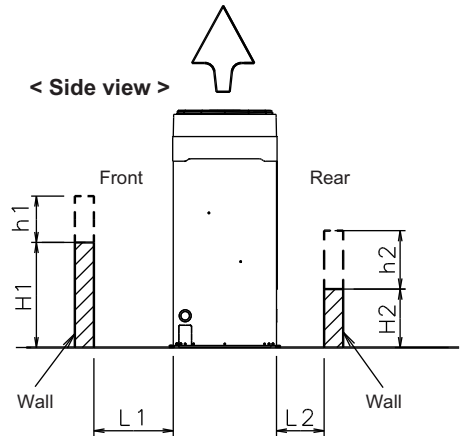

Minimum required space when there are walls, front and rear side.

OUTDOOR UNITS

- The installation standards that must be observed for each wall (front, rear, sides) are shown below.

  ✳ As a rule, there must be no obstructions on the blowing side of the fan.
  If there are obstructions on the blowing side of the fan, a discharge duct must be used.

  ✳ As a rule, the wall height on the front must be H1 (600mm) or less.

  ✳ As a rule, the wall height on the rear must be H2 (300mm) or less.

  ✳ There is no limit to the wall height on the sides.

  ✳ The sides of the unit and the walls must be separated by a distance of 10mm or more.

  ✳ If the distance from the sides of the unit to the walls is 150mm or less, the 6 screws on the side (right) of the unit must be removed before installation.

  ✳ If the wall height on the front exceeds H1 = 600mm, the distance h1 (the distance by which it exceeds H1) must be added to the L1 (500mm) service space.

  ✳ If the wall height on the rear exceeds H2 = 300mm, the distance h2 (the distance by which it exceeds H2) must be added to the L2 (300 mm) service space.

✳ If H1 ≦600mm, then L1≧500mm
✳ If H2 ≦300mm, then L2≧300mm
✳ If H1 >600mm, then L1≧(500 + h1) mm
✳ If H2 >300mm, then L2≧(300 + h2) mm

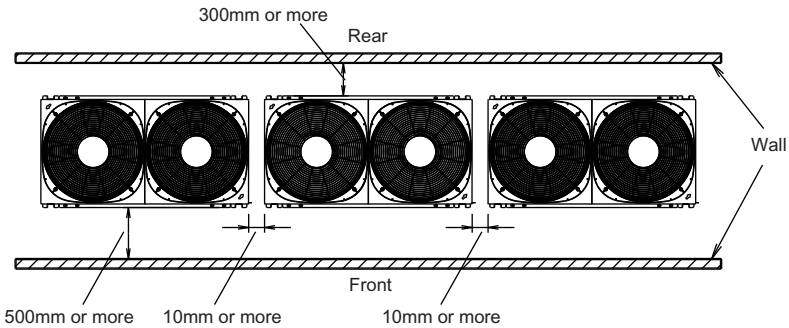

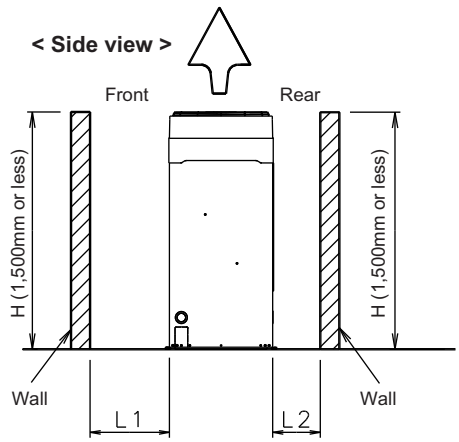

- If unit needs to install at a high front and rear wall height because of a small installation space:

  ✳ As a rule, there must be no obstructions on the blowing side of the fan.
  If there are obstructions on the blowing side of the fan, a discharge duct must be used.

  ✳ If space cannot be secured on the front and rear (L1<500mm + h1, L2<300mm + h2), do not install walls on the sides.

  ✳ The wall height on the front and rear must be 1,500mm or less.
  A service space must be secured of L1 ≧ 500mm and L2 ≧ 300mm.

  ✳ Construct louvers or other opening in the wall to ensure sufficient ventillation.

- If there is a high wall front or rear side :

  ✳ Another side of front or rear must be open space.

  ✳ At least 2 side must be opened.

■ SERIES CONNECTION

* The number of units in an outdoor unit series installation is up to 3 units (each system)
* If more than 1 system of outdoor units is installed, space (1000mm or more) must be secured between each refrigerant system.
* Do not install walls on the sides.

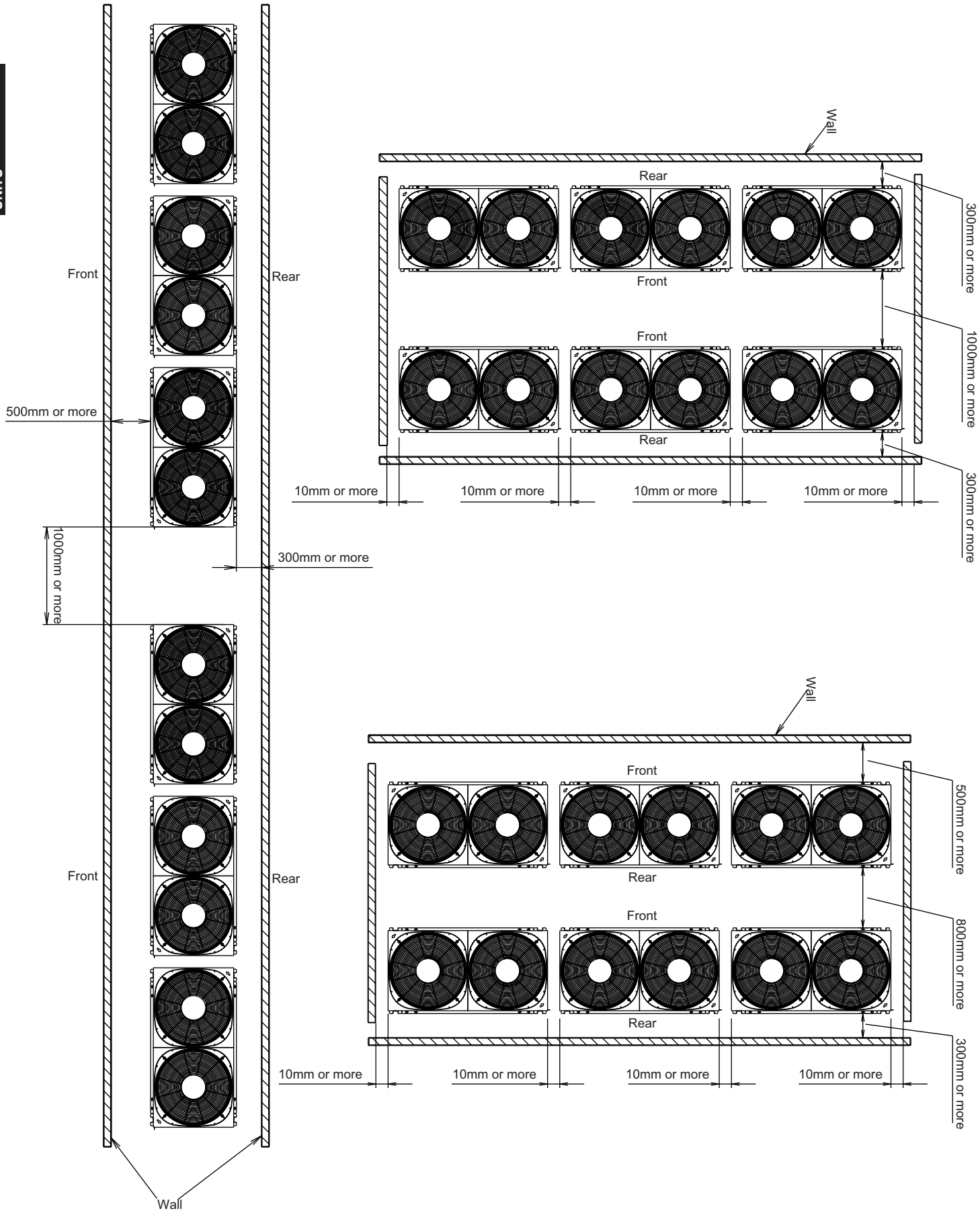

■ Maximum height difference between outdoor units

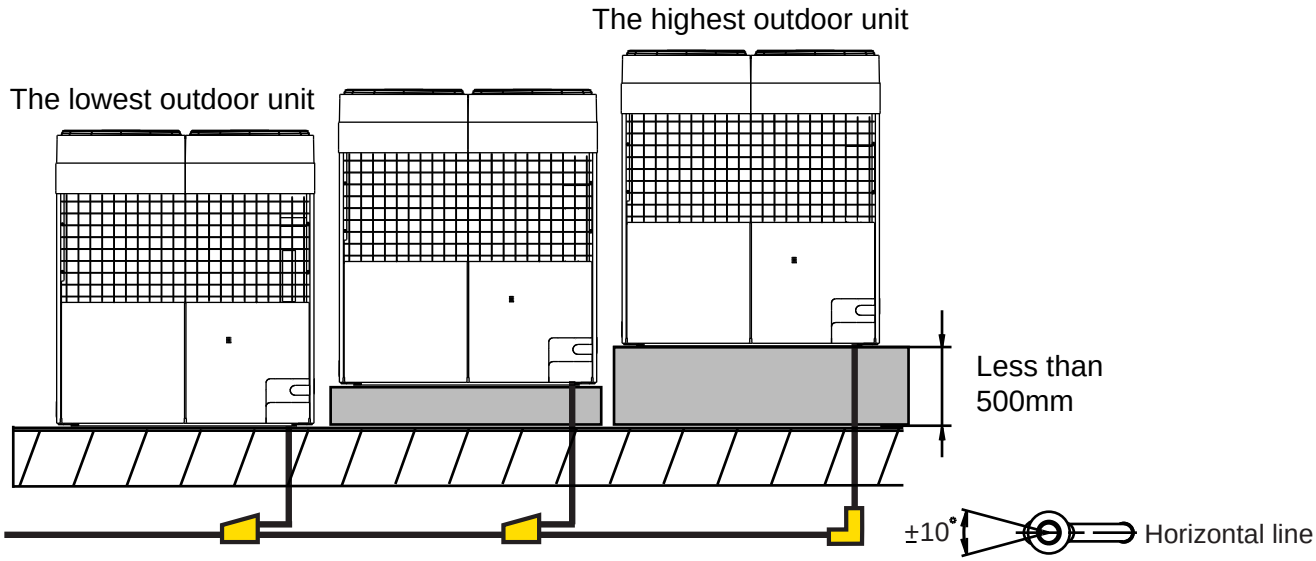

● The height difference between the lowest and the highest outdoor unit in the same refrigerant system is less than 500mm.
✳Install the branch kit horizontally.

■ Maximum pipe length between outdoor units

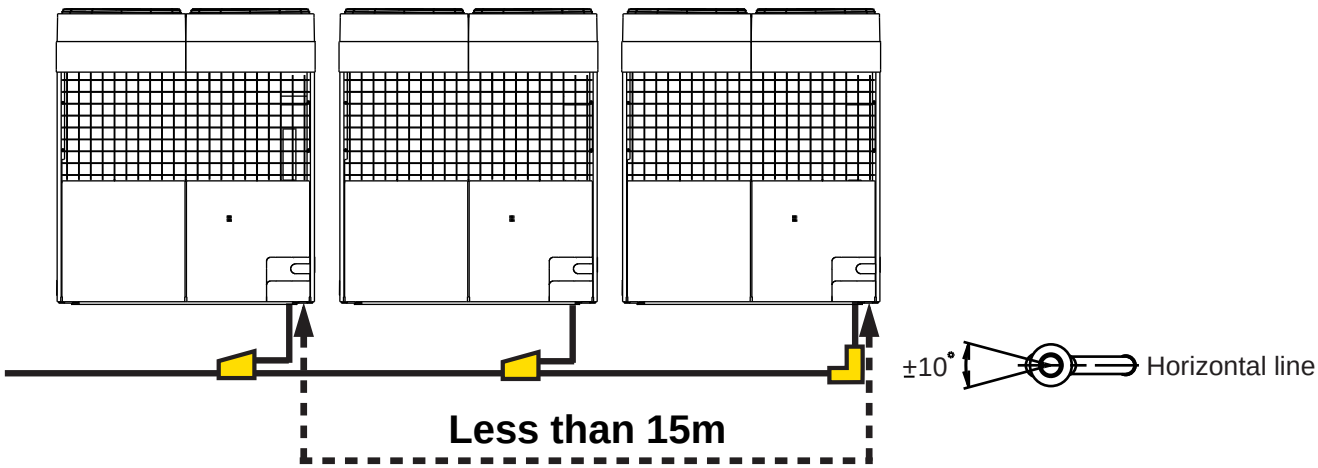

● The maximum pipe length between master type unit and the furthest slave type unit is less than 15m.
✳Install the branch kit horizontally.

■ Piping space

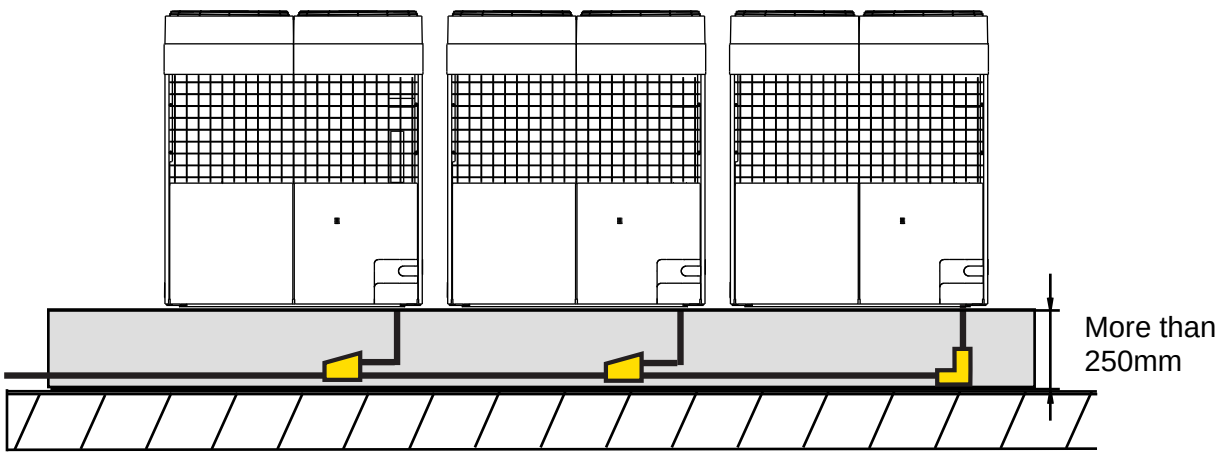

● When installing piping from the bottom of the outdoor units, the required space under the outdoor unit is more than 250mm.
✳Install the branch kit horizontally.

■REQUIRED SPACE FOR DISCHARGE OUTLET

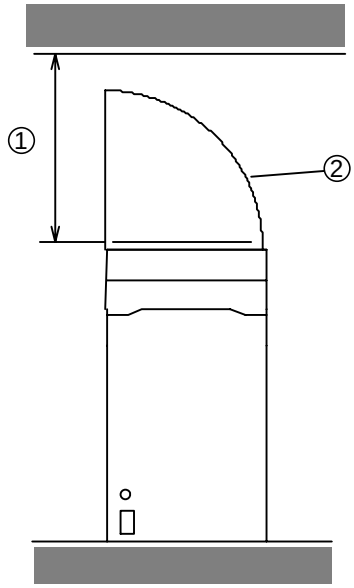

① Minimum space : 700mm
Install a discharge duct when the space is less than 1000mm.

② When a discharge duct is installed, the static pressure has to be less than 3mmAq (30Pa).

✳ When installing the duct, secure sufficient space on both sides (150mm or more).

■ CONSIDERATION FOR SEASONAL WIND AND SNOW

✳ Install inlet and outlet ducts in order to maintain stable operation in cold or snowy regions

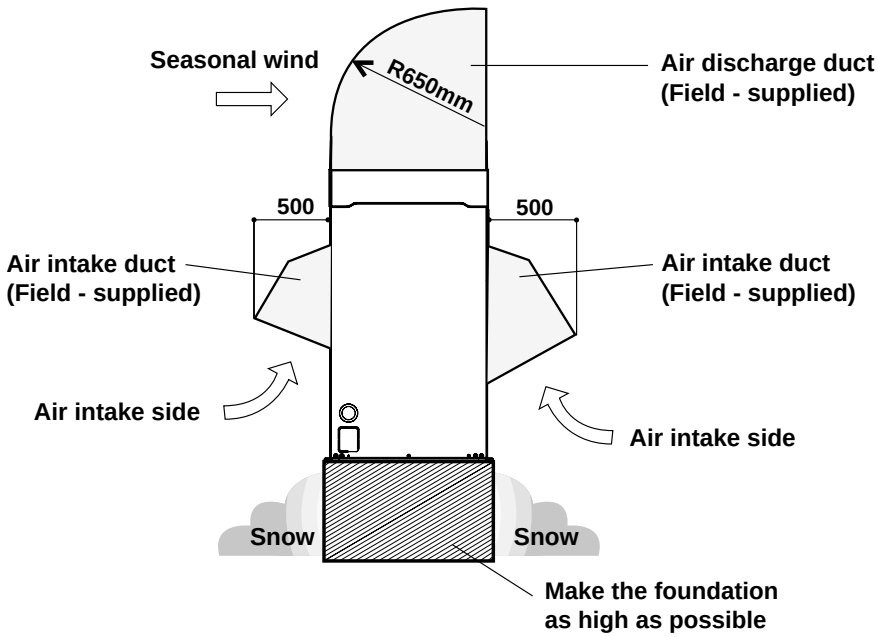

■ RECOMMENDED SHAPES OF EACH DUCT

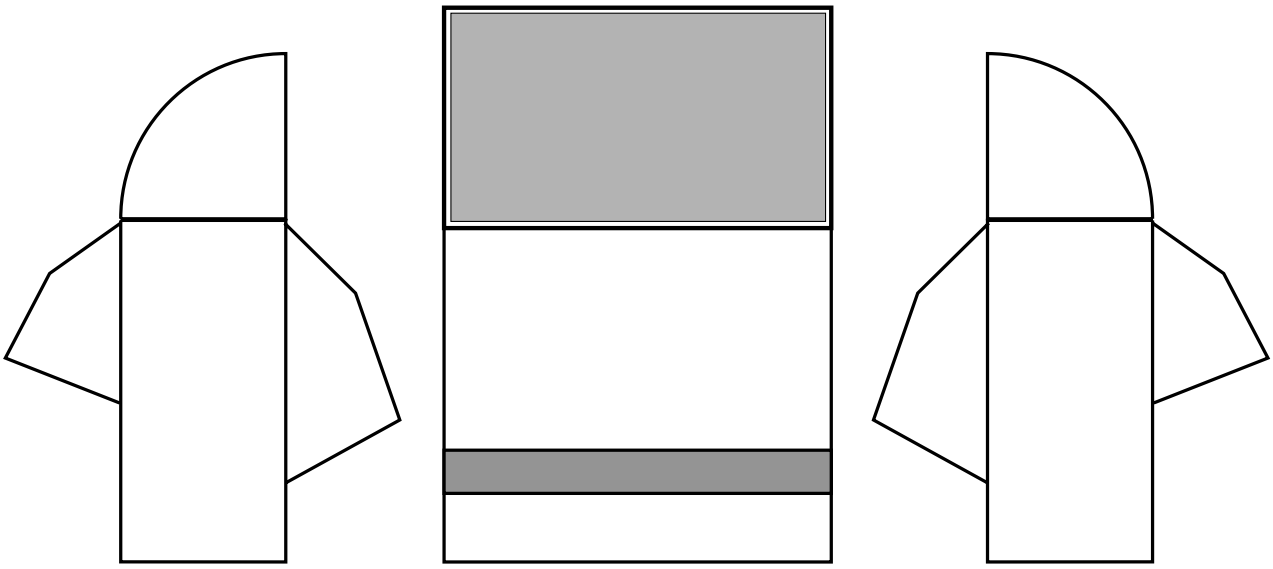

Fig.1 Overall view

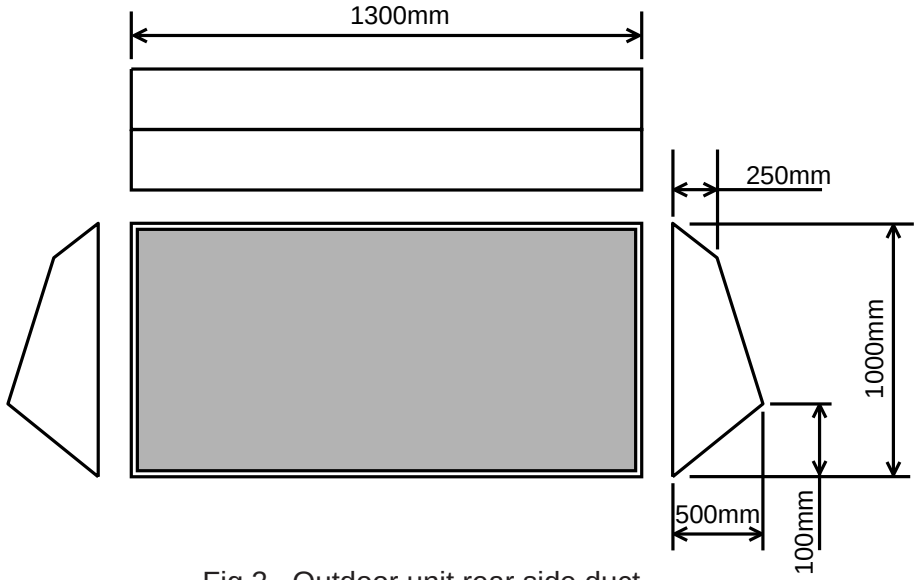

Fig.2 Outdoor unit rear side duct

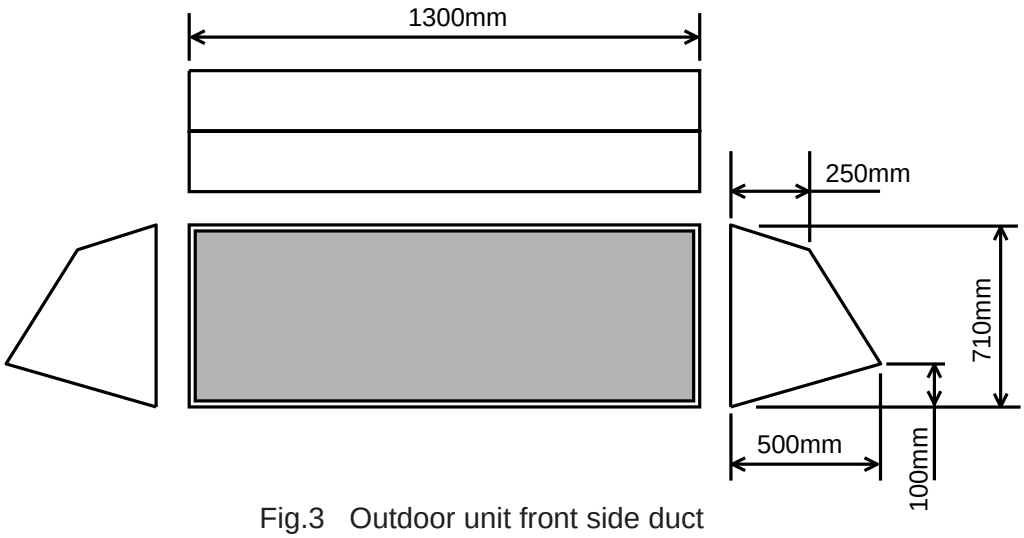

Fig.3 Outdoor unit front side duct

[unit : mm]

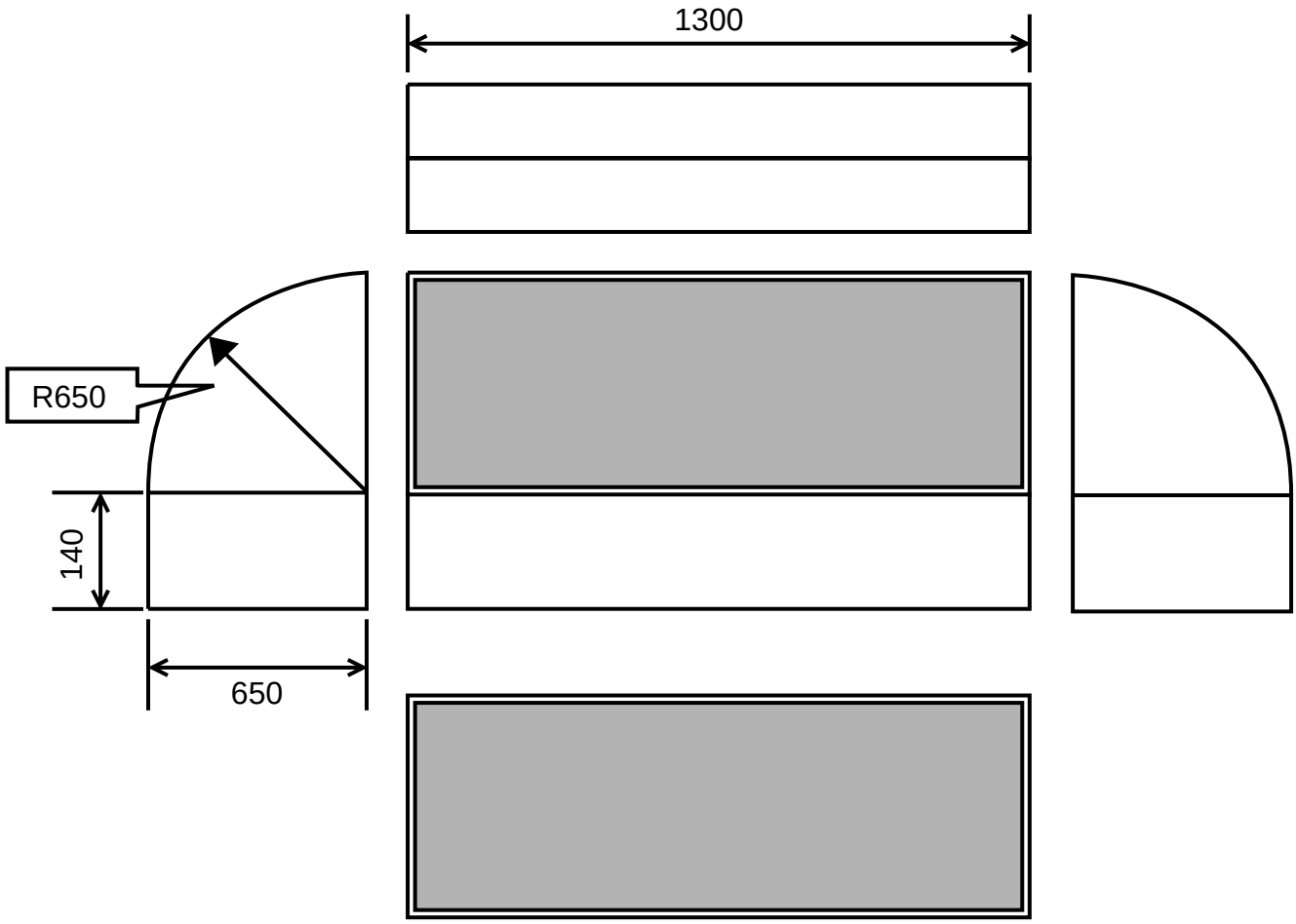

Fig.4 Outdoor unit upper part duct

⚠ CAUTION
1. When installing the duct, secure sufficient space on both sides (150mm or more).
2. When installing the duct, do not expose the bell mouth to excessive force (limit to 20kg or less). If the duct is heavy it could deform the bell mouth.
3. When the leakage of air from the connecting gaps (between the duct and outdoor unit or gallery) is large and the air temperature around outdoor unit increases more than 2 deg, Seal the joining gaps with putty.
4. When the duct is installed, remove two fan covers first.
5. When the duct is installed, the noise may increase.

3-5. REFRIGERANT CIRCUIT

■ MODELS : AJ✱A72LBTF , AJ✱A90LBTF , AJ✱A72UBTF ,AJ✱A90UBTF

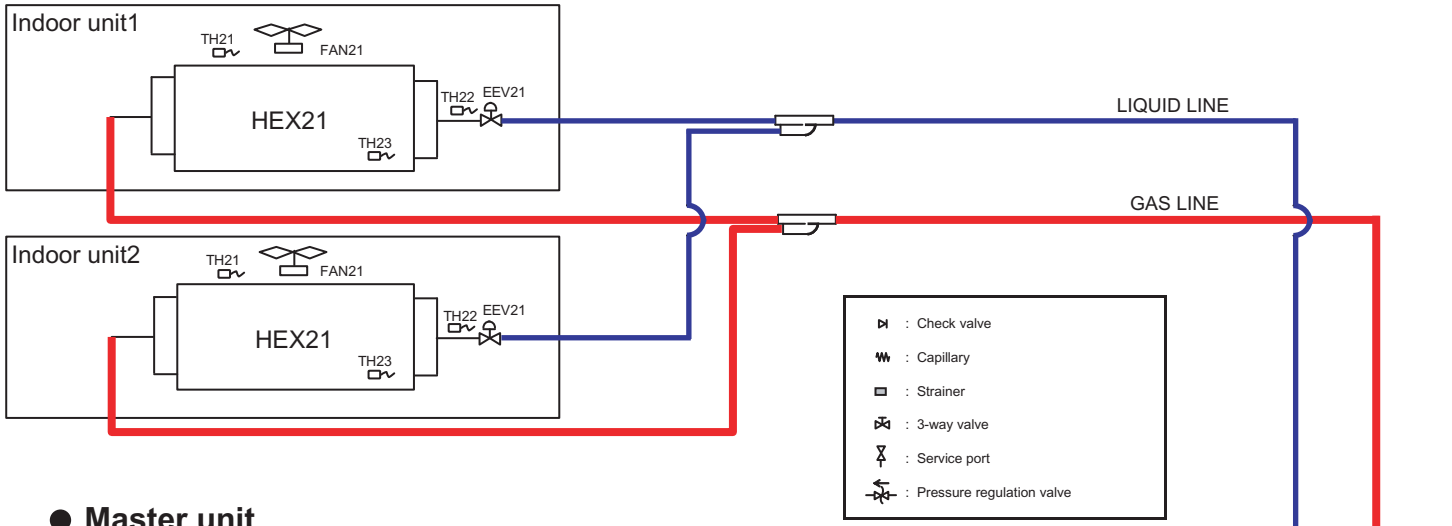

OUTDOOR UNITS

OUTDOOR UNITS

● Master unit

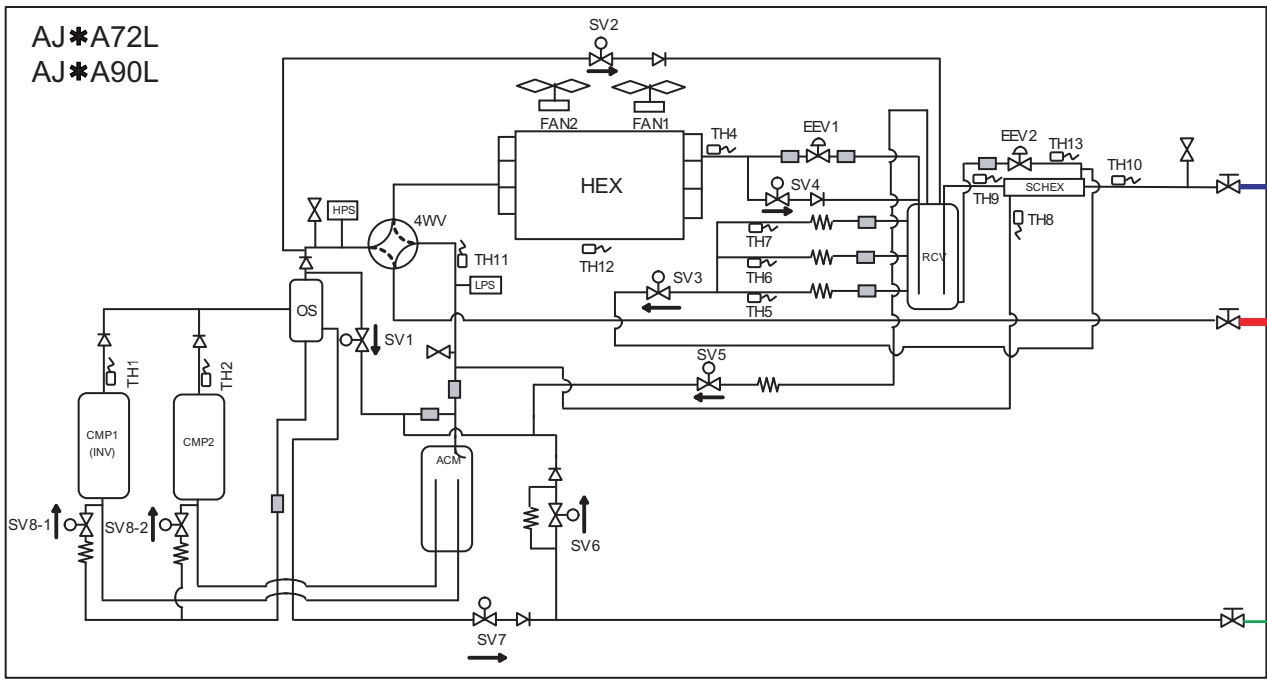

● Slave unit

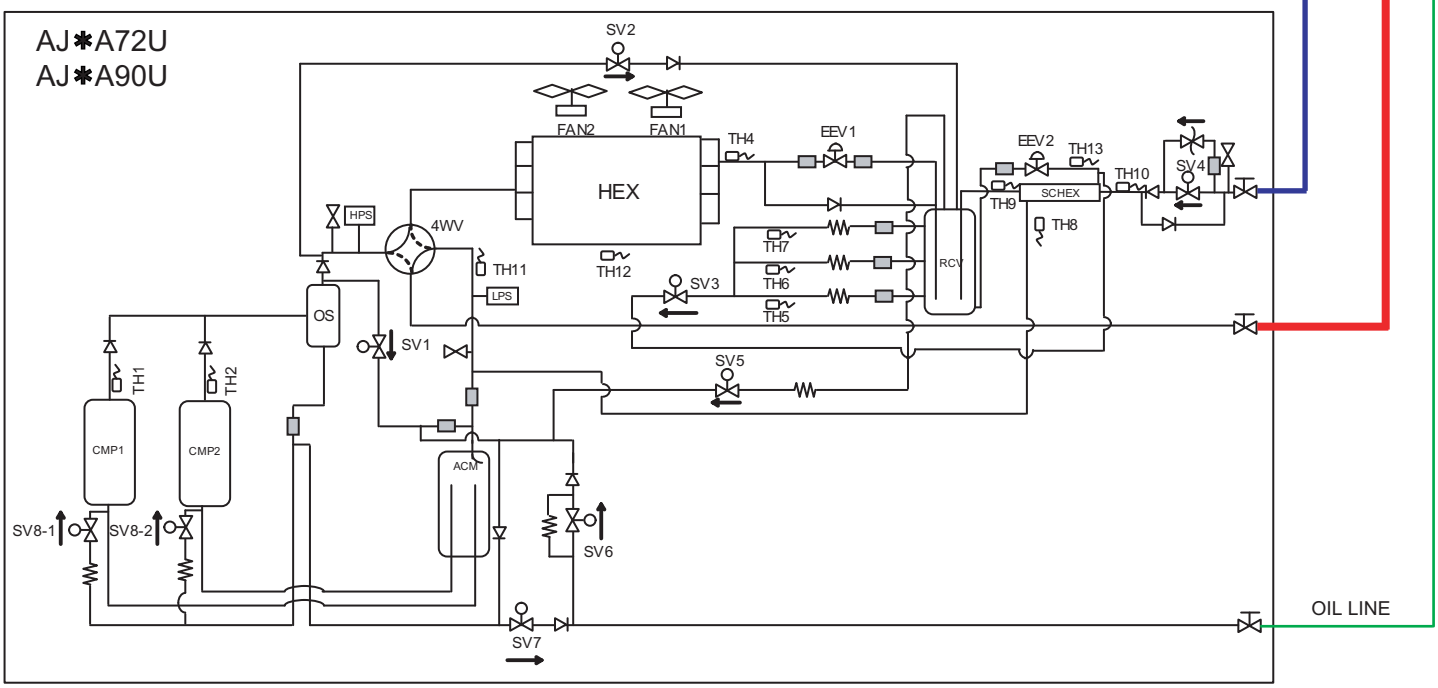

■SYMBOL DESCRIPTION

- **MODELS : AJ＊A72LBTF , AJ＊A90LBTF , AJ＊A72UBTF ,AJ＊A90UBTF**

MARK	DESCRIPTION
CMP 1	Compressor 1(Master: Inverter type / Slave: Constant speed type)
CMP 2	Compressor 2(Constant speed type)
HEX	Heat exchanger
FAN 1	Fan 1
FAN 2	Fan 2
ACM	Accumulator
RCV	Receiver tanker
OS	Oil separator
SCHEX	Sub-cool heat exchanger
HPS	High pressure sensor
LPS	Low pressure sensor
4WV	4-way valve
EEV 1	Electronic expansion valve 1
EEV 2	Electronic expansion valve 2
SV 1	Solenoid valve 1
SV 2	Solenoid valve 2
SV 3	Solenoid valve 3
SV 4	Solenoid valve 4
SV 5	Solenoid valve 5
SV 6	Solenoid valve 6
SV 7	Solenoid valve 7
SV 8-1	Solenoid valve 8-1
SV 8-2	Solenoid valve 8-2
TH 1	Discharge temperature thermistor 1
TH 2	Discharge temperature thermistor 2
TH 4	Heat exchanger (outlet) thermistor
TH 5	RCV level thermistor
TH 6	RCV level thermistor
TH 7	RCV level thermistor
TH 8	Sub-cool heat exchanger (outlet) thermistor
TH 9	Liquid temperature thermistor 1
TH 10	Liquid temperature thermistor 2
TH 11	Suction temperature thermistor
TH 12	Outdoor temperature thermistor
TH 13	Sub-cool heat exchanger (inlet) thermistor
HEX 21	Indoor unit heat exchanger
FAN 21	Indoor unit fan
EEV 21	Indoor unit electronic expansion valve
TH 21	Room temperature thermistor
TH 22	Indoor unit heat exchanger (inlet) thermistor
TH 23	Indoor unit heat exchanger (middle) thermistor

OUTDOOR UNITS

■ MODELS : AJ✱126LBTF , AJ✱126UBTF

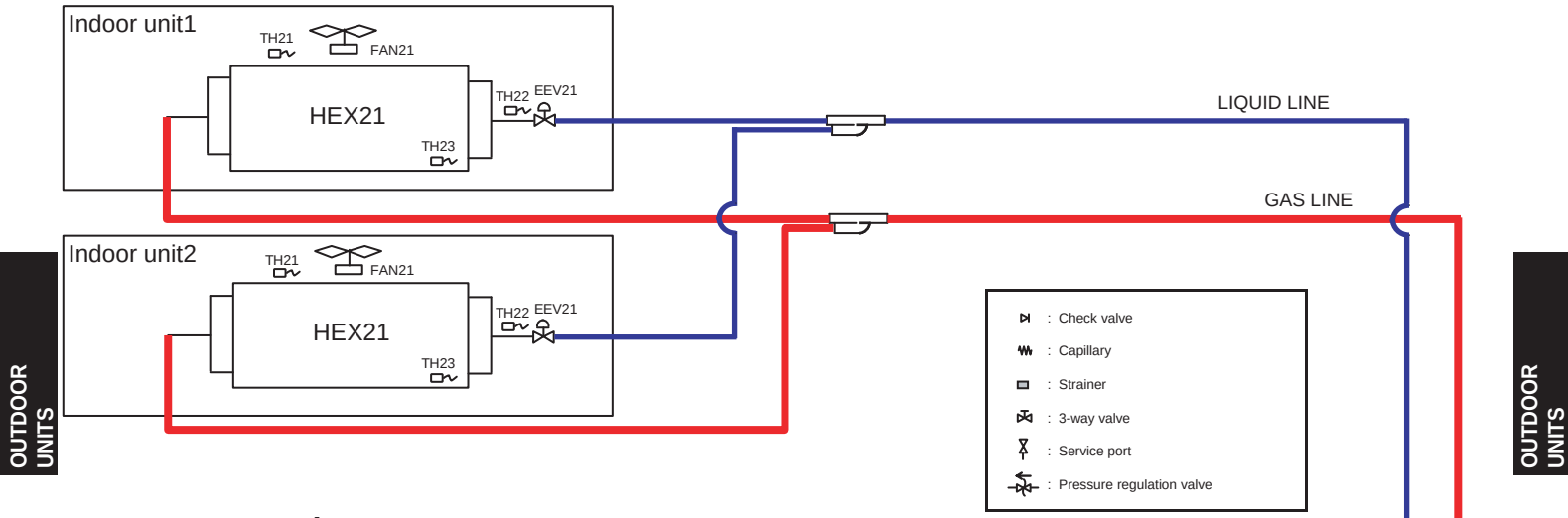

● Master unit

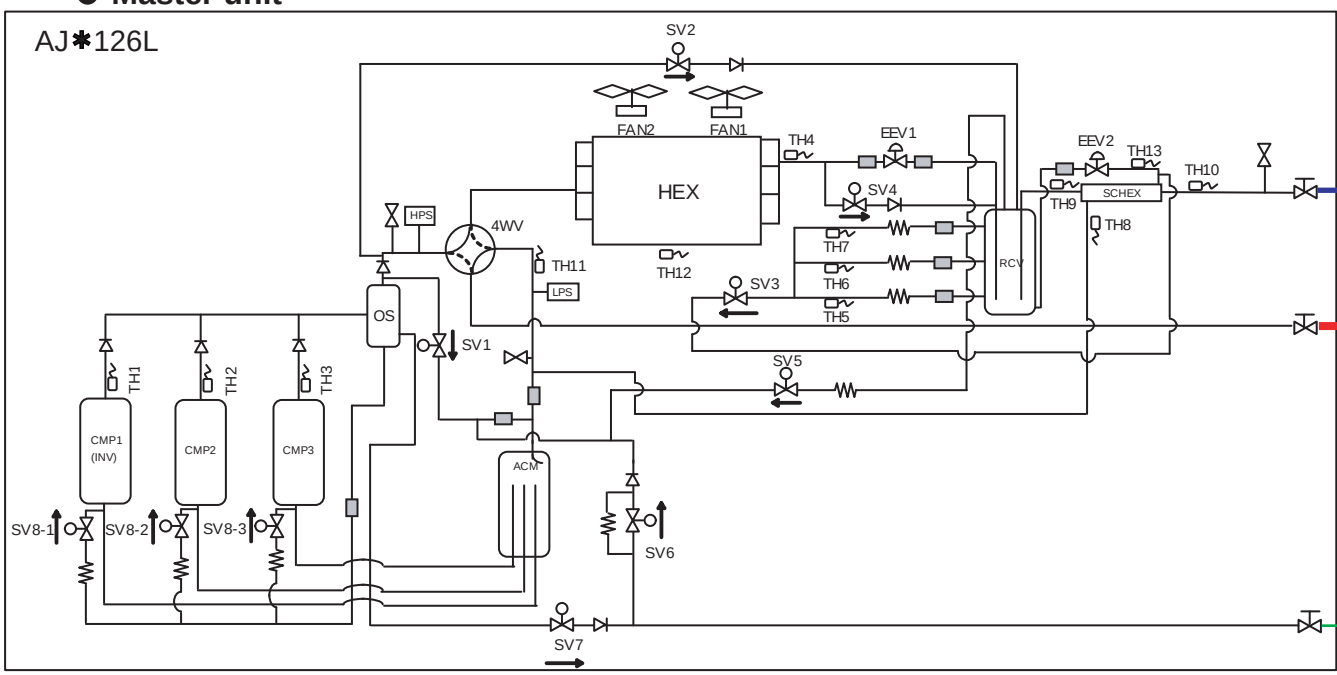

● Slave unit

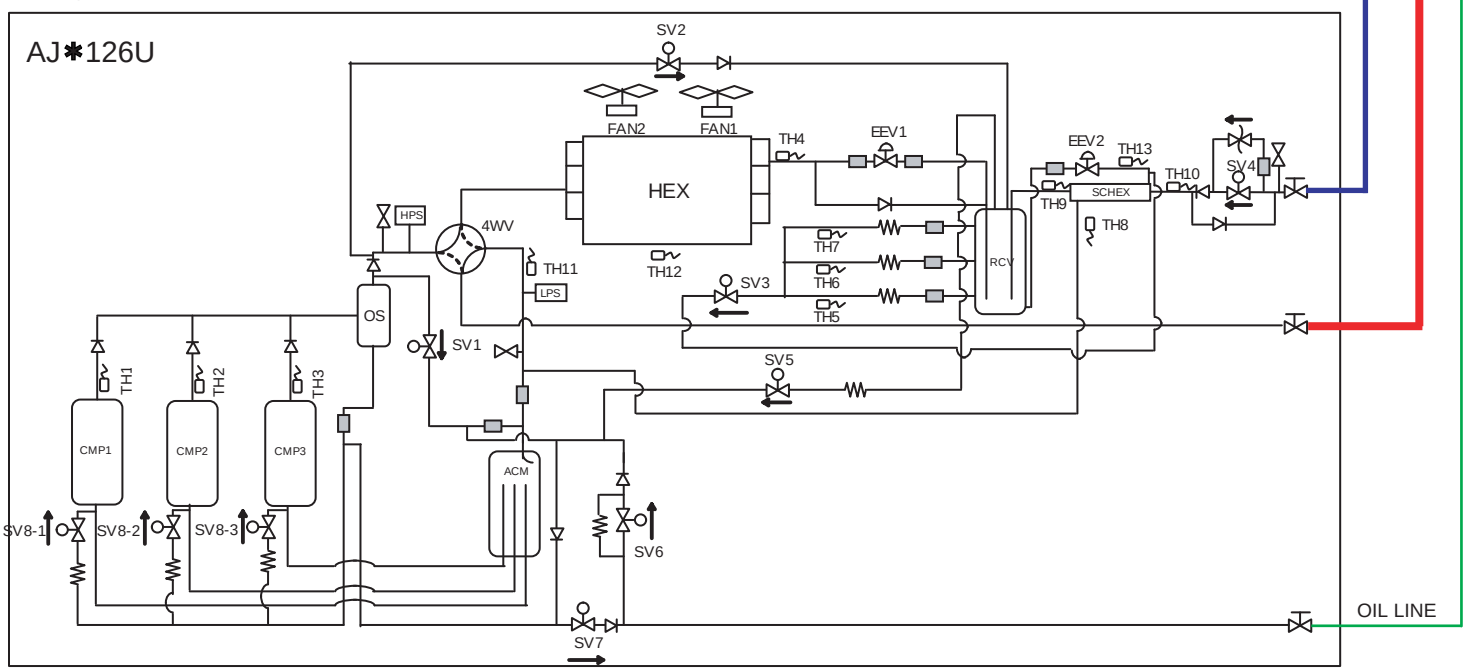

■SYMBOL DESCRIPTION

- **MODELS : AJ✱126LBTF , AJ✱126UBTF**

MARK	DESCRIPTION
CMP 1	Compressor 1(Master: Inverter type / Slave: Constant speed type)
CMP 2	Compressor 2(Constant speed type)
CMP 3	Compressor 3(Constant speed type)
HEX	Heat exchanger
FAN 1	Fan 1
FAN 2	Fan 2
ACM	Accumulator
RCV	Receiver tanker
OS	Oil separator
SCHEX	Sub-cool heat exchanger
HPS	High pressure sensor
LPS	Low pressure sensor
4WV	4-way valve
EEV 1	Electronic expansion valve 1
EEV 2	Electronic expansion valve 2
SV 1	Solenoid valve 1
SV 2	Solenoid valve 2
SV 3	Solenoid valve 3
SV 4	Solenoid valve 4
SV 5	Solenoid valve 5
SV 6	Solenoid valve 6
SV 7	Solenoid valve 7
SV 8-1	Solenoid valve 8-1
SV 8-2	Solenoid valve 8-2
SV 8-3	Solenoid valve 8-3
TH 1	Discharge temperature thermistor 1
TH 2	Discharge temperature thermistor 2
TH 3	Discharge temperature thermistor 3
TH 4	Heat exchanger (outlet) thermistor
TH 5	RCV level thermistor
TH 6	RCV level thermistor
TH 7	RCV level thermistor
TH 8	Sub-cool heat exchanger (outlet) thermistor
TH 9	Liquid temperature thermistor 1
TH 10	Liquid temperature thermistor 2
TH 11	Suction temperature thermistor
TH 12	Outdoor temperature thermistor
TH 13	Sub-cool heat exchanger (inlet) thermistor
HEX 21	Indoor unit heat exchanger
FAN 21	Indoor unit fan
EEV 21	Indoor unit electronic expansion valve
TH 21	Room temperature thermistor
TH 22	Indoor unit heat exchanger (inlet) thermistor
TH 23	Indoor unit heat exchanger (middle) thermistor

OUTDOOR UNITS

3-6. WIRING DIAGRAM

■ MODELS : AJ＊A72LBTF, AJ＊A90LBTF

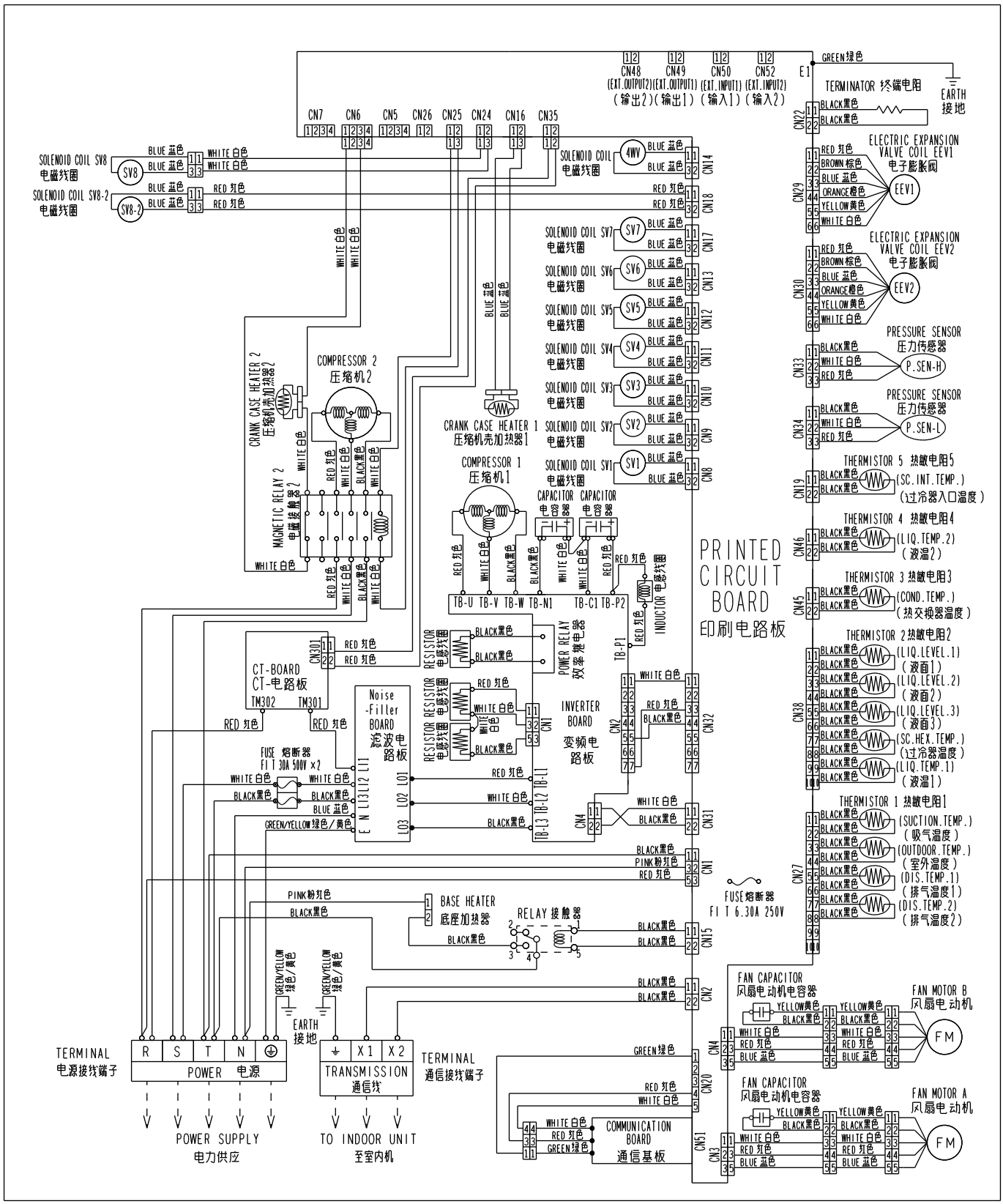

■ MODEL ： AJ＊126LBTF

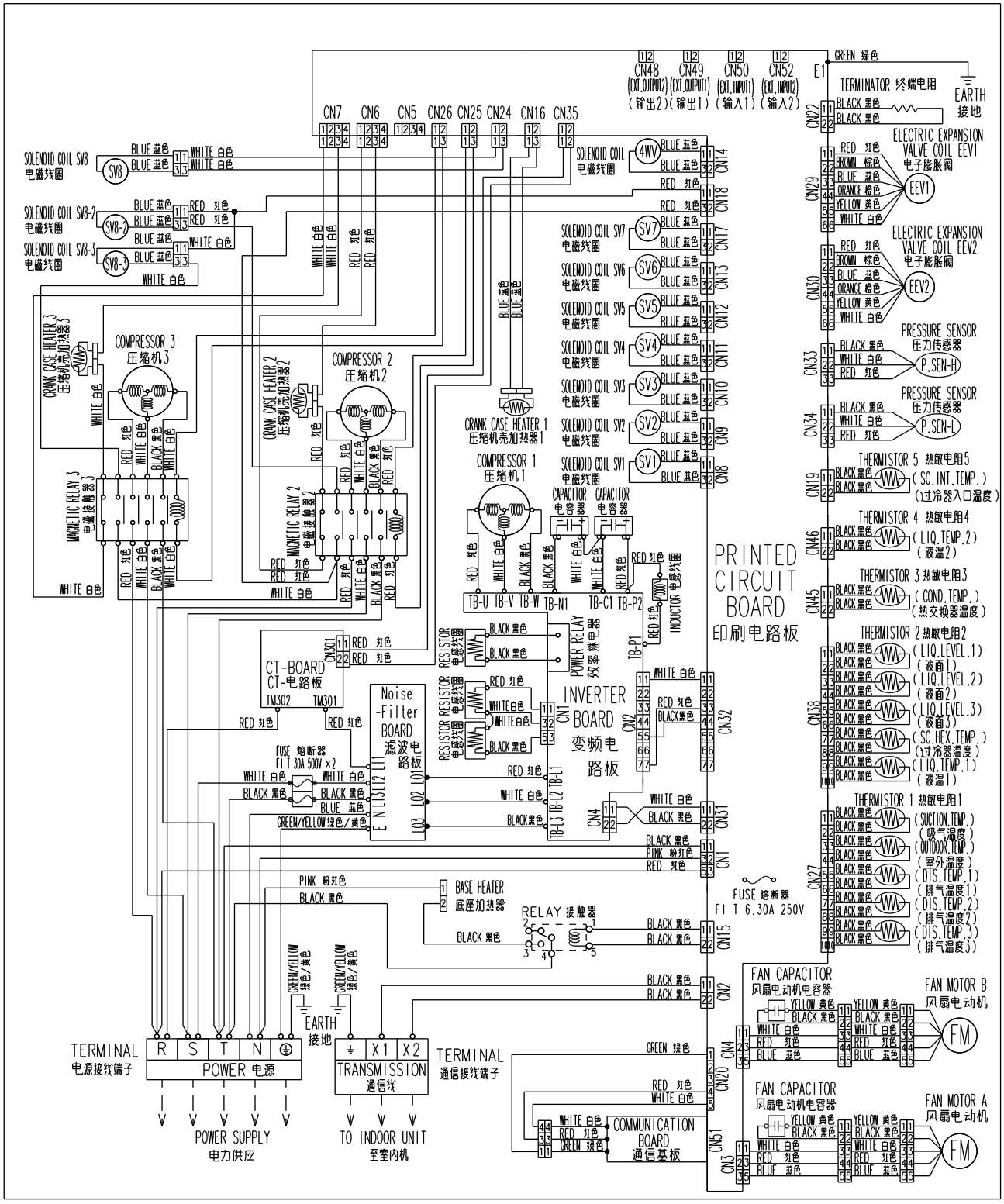

■ MODELS : AJ＊A72UBTF , AJ＊A90UBTF

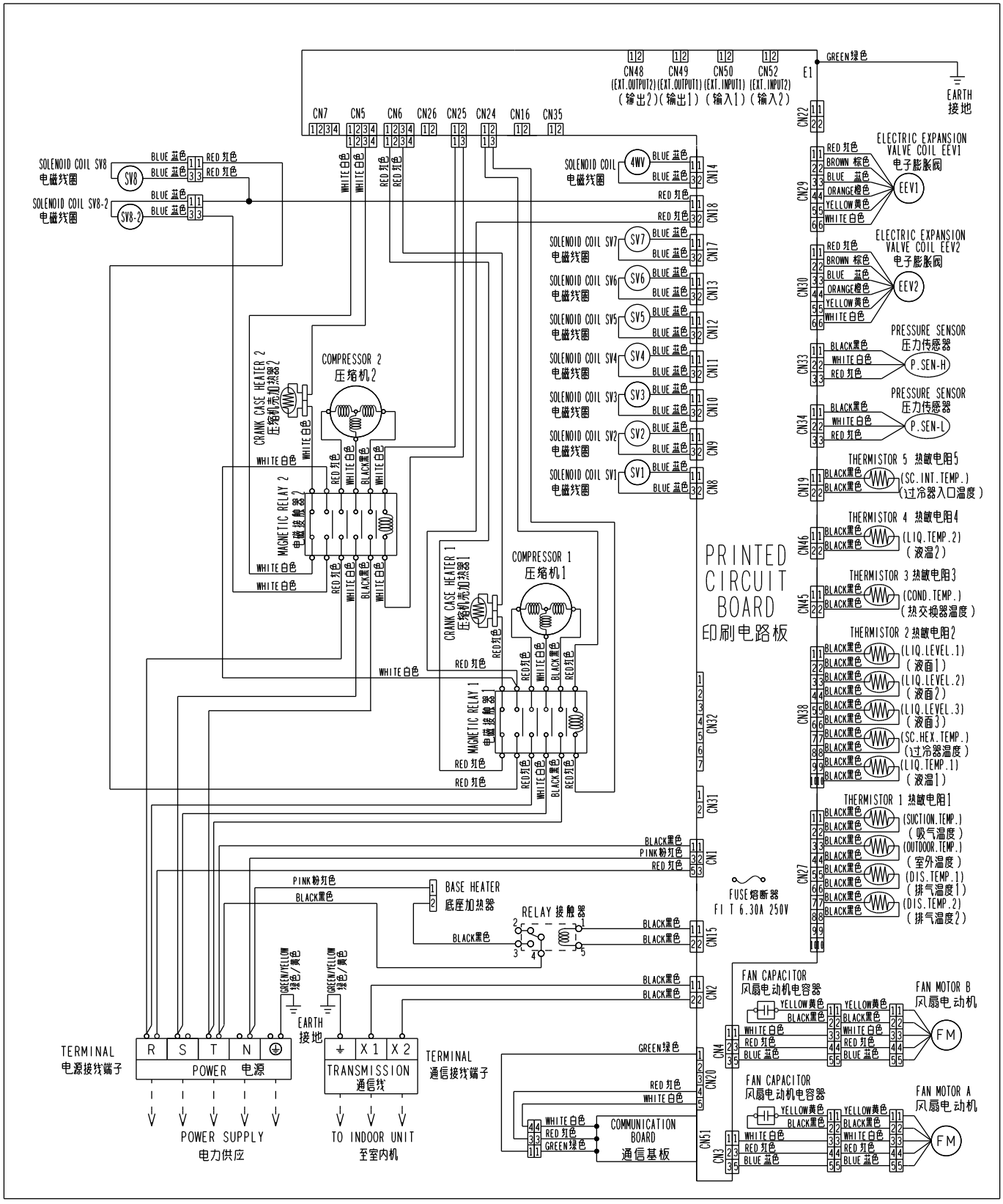

■ MODEL ： AJ＊126UBTF

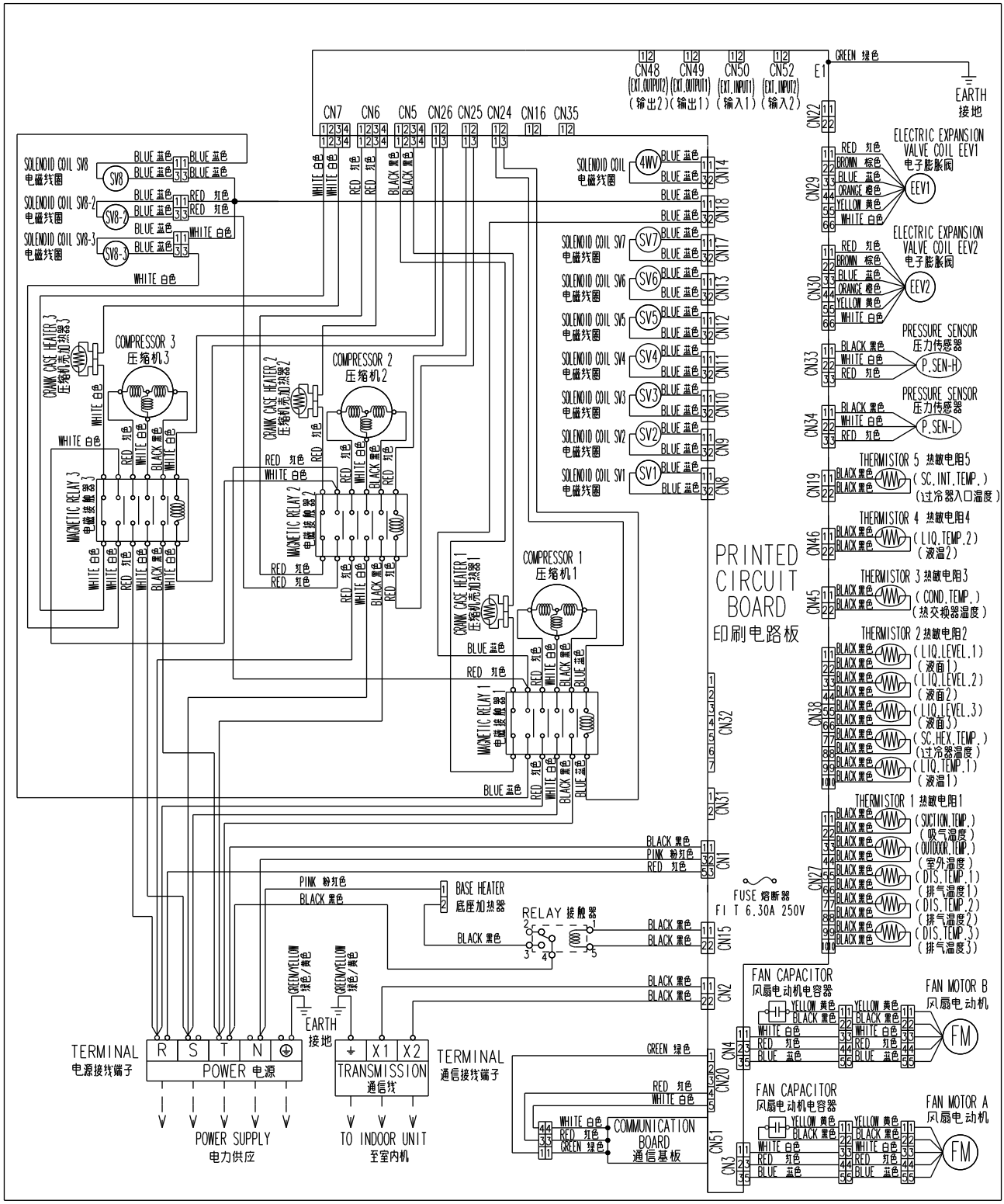

3-7. OPERATION RANGE

■ 8HP, 10HP, 14HP

Operation mode	Operation range	
	Indoor unit	Outdoor unit
Cooling / Dry	18 to 32°CDB R. H. 80 % or less	-15 to 43°CDB
Heating	10 to 30°CDB	-20 to 21°CDB

R. H. : Relative Humidity.

OUTDOOR UNITS

■ 16HP, 18HP, 20HP, 22HP, 24HP, 26HP, 28HP, 30HP 32HP, 34HP, 36HP, 38HP, 42HP

Operation mode	Operation range	
	Indoor unit	Outdoor unit
Cooling / Dry	18 to 32°CDB R. H. 80 % or less	-5 to 43°CDB
Heating	10 to 30°CDB	-20 to 21°CDB

R. H. : Relative Humidity.

3-8. SOUND LEVEL

■ OVERALL

Type	Model name	Sound level	
		Cooling	Heating
Master	AJ✱A72LBTF	58 dB (A)	60 dB (A)
	AJ✱A90LBTF	58 dB (A)	60 dB (A)
	AJ✱126LBTF	60 dB (A)	62 dB (A)
Slave	AJ✱A72UBTF	58 dB (A)	60 dB (A)
	AJ✱A90UBTF	58 dB (A)	60 dB (A)
	AJ✱126UBTF	60 dB (A)	62 dB (A)

OUTDOOR UNITS

■ SOUND LEVEL CHECK POINT

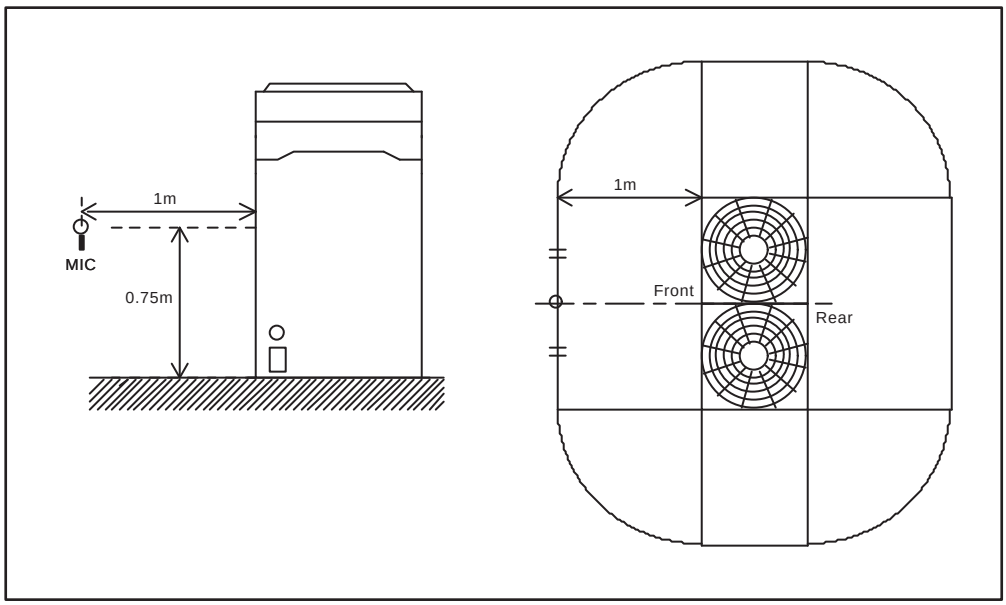

■OCTAVE-BAND LEVEL : COOLING (MASTER TYPE)

● MODELS : AJ∗A72LBTF
AJ∗A90LBTF

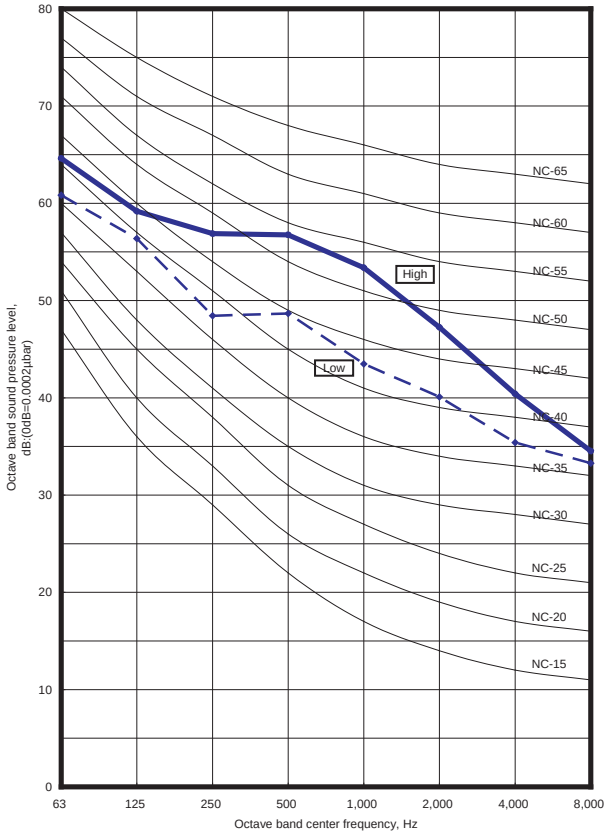

● MODEL : AJ∗126LBTF

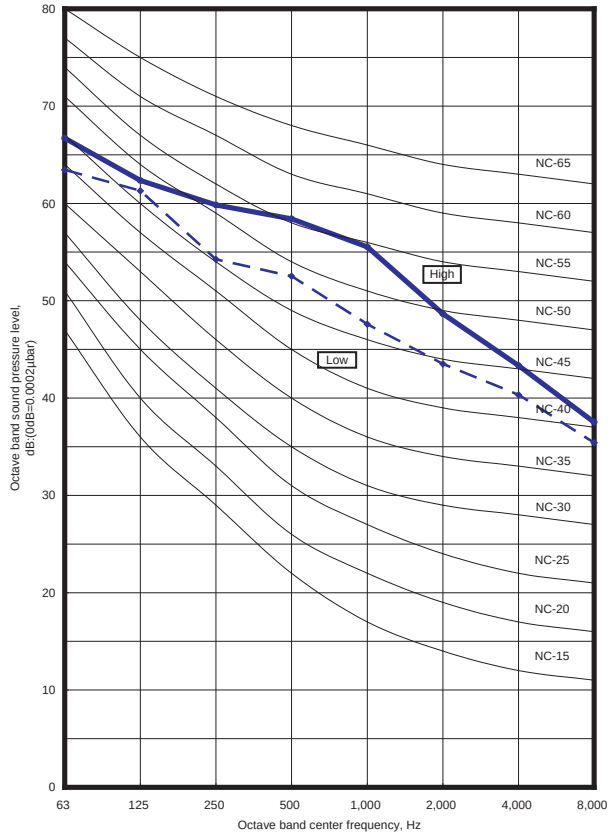

■OCTAVE-BAND LEVEL : COOLING (SLAVE TYPE)

● MODELS : AJ∗A72UBTF
AJ∗A90UBTF

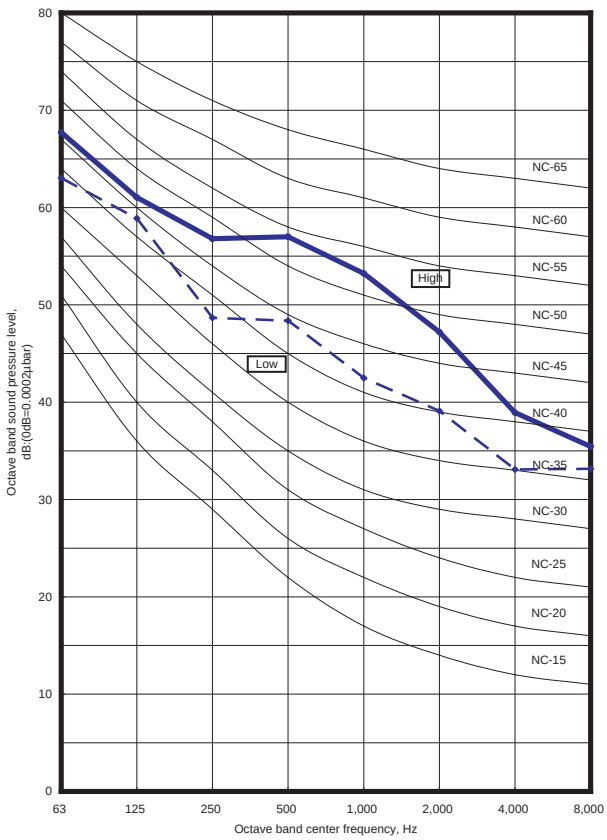

● MODEL : AJ∗126UBTF

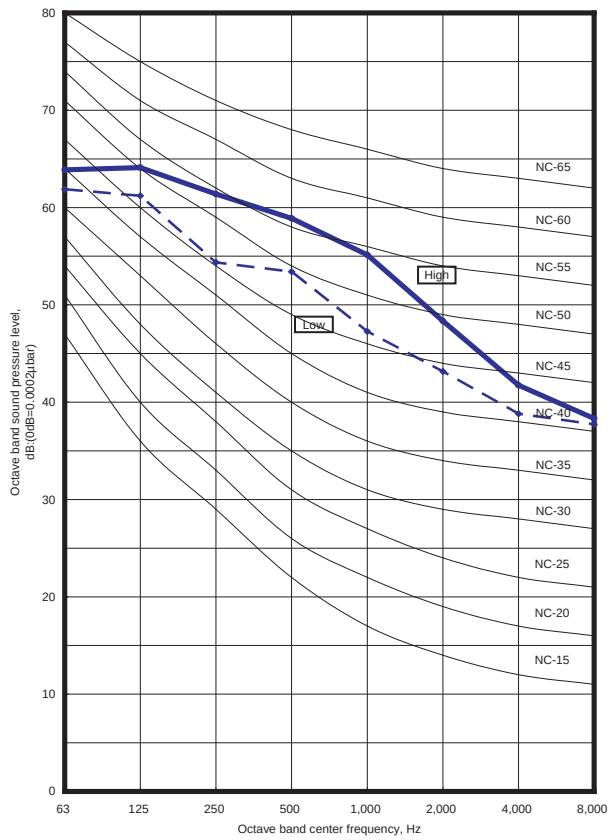

OUTDOOR UNITS

■OCTAVE-BAND LEVEL : HEATING (MASTER TYPE)

- **MODELS : AJ∗A72LBTF**
  AJ∗A90LBTF

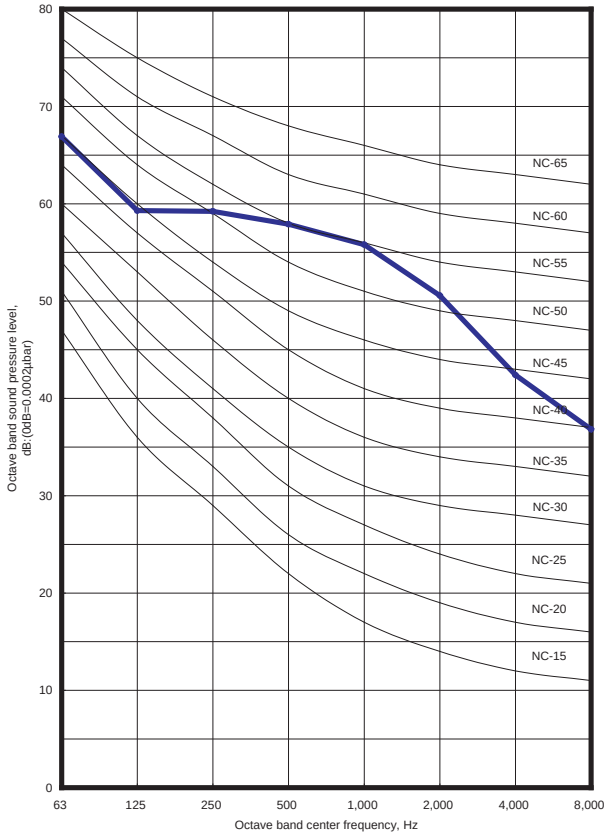

- **MODEL : AJ∗126LBTF**

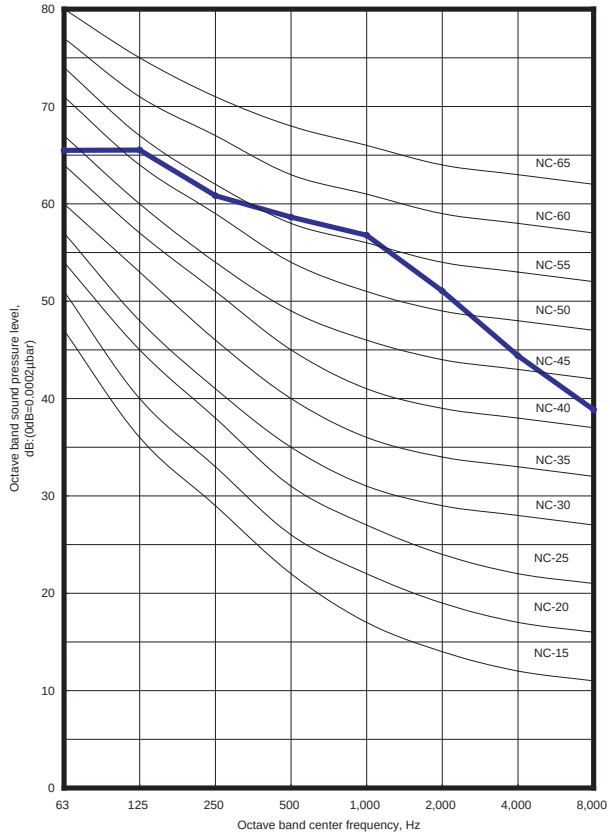

■OCTAVE-BAND LEVEL : HEATING (SLAVE TYPE)

- **MODELS : AJ∗A72UBTF**
  AJ∗A90UBTF

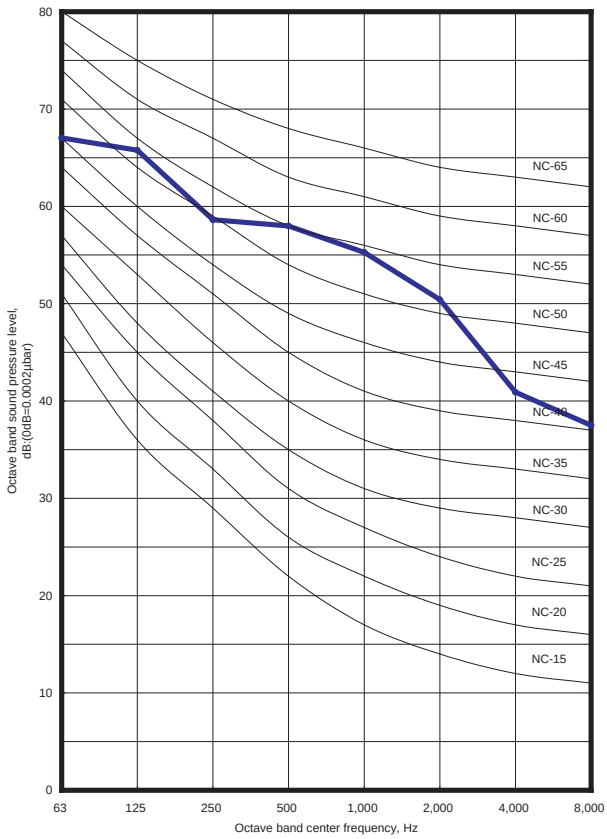

- **MODEL : AJ∗126UBTF**

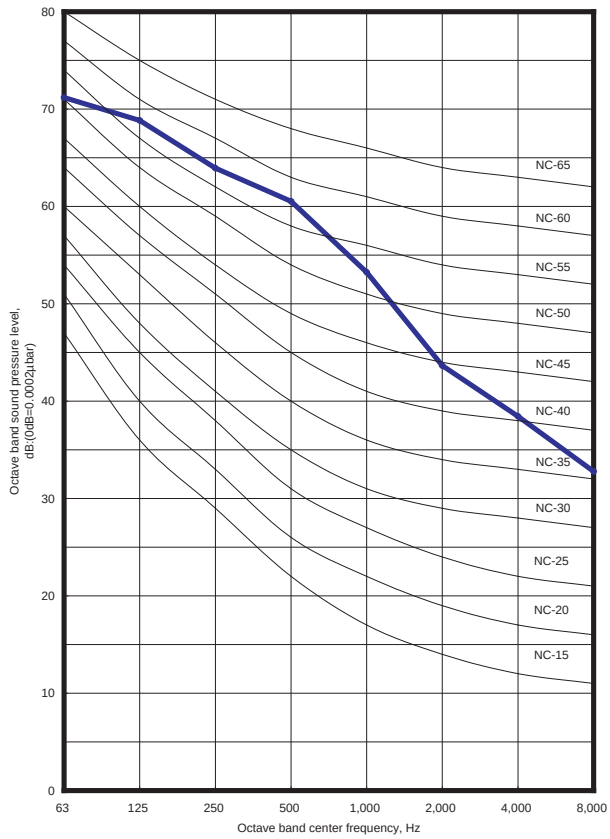

OUTDOOR UNITS

3-9. ELECTRIC CHARACTERISTICS

Outdoor Unit			Operation Mode	Rated Value				Electric Characteristics								
				Power Supply				Full Load Charcteristics			Wiring Specifications *1				Outdoor Fan Morter	
				Hz	Voltage (V)	RLA (A)	Input (kW)	MCA (A)	TOCA (A)	MSC (A)	MFA (A)	Power Cable (mm^2)	Earth Cable (mm^2)	Limited Wiring Length(m)*2	Output (kW)	FLA (A)
Master Unit	8HP	AJ*A72LBTF	Cooling	50	380	13.1	7.00	34.5	37.0	99	40	6	4	37	0.15 x 2	1.38 x 2
					400	12.5										
					415	12.0										
			Heating		380	12.7	6.76									
					400	12.0										
					415	11.6										
	10HP	AJ*A90LBTF	Cooling	50	380	16.4	8.75	34.5	37.0	99	40	6	4	33	0.15 x 2	1.38 x 2
					400	15.6										
					415	15.0										
			Heating		380	16.0	8.51									
					400	15.2										
					415	14.6										
	14HP	AJ*126LBTF	Cooling	50	380	25.0	13.3	53.8	57.8	114	63	10	6	39	0.25 x 2	2.20 x 2
					400	23.8										
					415	22.9										
			Heating		380	24.8	13.2									
					400	23.6										
					415	22.7										
Slave Unit	8HP	AJ*A72UBTF	Cooling	50	380	13.1	7.00	31.2	36.8	84	40	6	4	37	0.15 x 2	1.38 x 2
					400	12.5										
					415	12.0										
			Heating		380	12.7	6.76									
					400	12.0										
					415	11.6										
	10HP	AJ*A90UBTF	Cooling	50	380	16.4	8.75	38.0	41.2	102	50	6	4	30	0.15 x 2	1.38 x 2
					400	15.6										
					415	15.0										
			Heating		380	16.0	8.51									
					400	15.2										
					415	14.6										
	14HP	AJ*126UBTF	Cooling	50	380	25.0	13.3	57.3	62.0	117	63	10	6	37	0.25 x 2	2.20 x 2
					400	23.8										
					415	22.9										
			Heating		380	24.8	13.2									
					400	23.6										
					415	22.7										

*1 Wiring Spec : These values are recommended data. Please select the wiring spec in accordance with local rules.

*2 Limited Wiring Length : This wiring length is in case voltage drop less than 2%. When wiring length extend longer, select the wiring size of larger diameter.

RLA : Rated Load Amp
MCA : Min Circuit Amp = Max Operating Current (Full Load)
MSC : Max Starting Current
TOCA : Total Value of Each OC Set
MFA : Main Fuse (Circuit Breaker) Current

OUTDOOR UNITS

Outdoor Unit			Operation Mode	Rated Value				Electric Characteristics		
				Power Supply				Full Load Charcteristics		
				Hz	Voltage (V)	RLA (A)	Input (kW)	MCA (A)	TOCA (A)	MSC (A)
Conbinded System	16HP	AJ*A72LBTF AJ*A72UBTF	Cooling	50	380	26.3	14.0	65.7	73.8	111
					400	24.9				
					415	24.1				
			Heating		380	25.4	13.5			
					400	24.1				
					415	23.2				
	18HP	AJ*A90LBTF AJ*A72UBTF	Cooling	50	380	29.6	15.8	65.7	73.8	111
					400	28.1				
					415	27.1				
			Heating		380	28.7	15.3			
					400	27.2				
					415	26.2				
	20HP	AJ*A90LBTF AJ*A90UBTF	Cooling	50	380	32.8	17.5	72.5	78.2	129
					400	31.2				
					415	30.1				
			Heating		380	31.9	17.0			
					400	30.3				
					415	29.3				
	22HP	AJ*126LBTF AJ*A72UBTF	Cooling	50	380	38.2	20.3	85.0	94.6	127
					400	36.2				
					415	34.9				
			Heating		380	37.5	20.0			
					400	35.6				
					415	34.4				
	24HP	AJ*126LBTF AJ*A90UBTF	Cooling	50	380	41.4	22.1	91.8	99.0	145
					400	39.4				
					415	37.9				
			Heating		380	40.8	21.7			
					400	38.8				
					415	37.4				
	26HP	AJ*A90LBTF AJ*A72UBTF AJ*A72UBTF	Cooling	50	380	42.7	22.8	96.9	110.6	136
					400	40.5				
					415	39.1				
			Heating		380	41.3	22.0			
					400	39.3				
					415	37.9				
	28HP	AJ*126LBTF AJ*126UBTF	Cooling	50	380	50.0	26.7	111.1	119.8	160
					400	47.5				
					415	45.8				
			Heating		380	49.7	26.5			
					400	47.2				
					415	45.5				
	30HP	AJ*A90LBTF AJ*A90UBTF AJ*A90UBTF	Cooling	50	380	49.3	26.3	110.5	119.4	159
					400	46.8				
					415	45.1				
			Heating		380	47.9	25.5			
					400	45.5				
					415	43.9				
	32HP	AJ*126LBTF AJ*A90UBTF AJ*A72UBTF	Cooling	50	380	54.6	29.1	123.0	135.8	157
					400	51.8				
					415	50.0				
			Heating		380	53.5	28.5			
					400	50.8				
					415	49.0				
	34HP	AJ*126LBTF AJ*A90UBTF AJ*A90UBTF	Cooling	50	380	57.9	30.8	129.8	140.2	175
					400	54.9				
					415	53.0				
			Heating		380	56.8	30.3			
					400	53.9				
					415	52.0				
	36HP	AJ*126LBTF AJ*126UBTF AJ*A72UBTF	Cooling	50	380	63.2	33.7	142.3	156.6	173
					400	60.0				
					415	57.9				
			Heating		380	62.3	33.2			
					400	59.2				
					415	57.1				
	38HP	AJ*126LBTF AJ*126UBTF AJ*A90UBTF	Cooling	50	380	66.4	35.4	149.1	161.0	190
					400	63.1				
					415	60.9				
			Heating		380	65.6	35.0			
					400	62.3				
					415	60.1				
	42HP	AJ*126LBTF AJ*126UBTF AJ*126UBTF	Cooling	50	380	75.0	40.0	168.4	181.8	206
					400	71.3				
					415	68.7				
			Heating		380	74.5	39.7			
					400	70.8				
					415	68.2				

*1 Wiring Spec : These values are recommended data. Please select the wiring spec in accordance with local rules.

*2 Limited Wiring Length : This wiring length is in case voltage drop less than 2%. When wiring length extend longer, select the wiring size of larger diameter.

RLA : Rated Load Amp
MCA : Min Circuit Amp = Max Operating Current (Full Load)
MSC : Max Starting Current
TOCA : Total Value of Each OC Set
MFA : Main Fuse (Circuit Breaker) Current

3-10. SAFETY DEVICES

■ MASTER MODEL

SAFETY DEVICE	AJ*A72LBTF	AJ*A90LBTF	AJ*126LBTF
PCB FUSE	250V 6.3A		
FUSE (INVERTER UNIT)	500V 30A		
COMPRESSOR INNER PROTECTOR	OFF : 50℃ (29A) — 165℃ (0A) ON : 80℃ ± 10℃		
HIGH PRESSURE PROTECTION	4.1MPa OFF, 3.5MPa ON		
LOW PRESSURE PROTECTION	0.10MPa OFF, 0.12MPa ON		
FAN MOTOR THERMAL PROTECTOR	130℃ ± 5℃ OFF, 83℃ ± 15℃ ON		

OUTDOOR UNITS

■ SLAVE MODEL

SAFETY DEVICE	AJ*A72UBTF	AJ*A90UBTF	AJ*126UBTF
PCB FUSE	250V 6.3A		
COMPRESSOR INNER PROTECTOR	OFF : 50℃ (27A) — 165℃ (0A) ON : 80℃ ± 10℃	OFF : 50℃ (29A) — 165℃ (0A) ON : 80℃ ± 10℃	
HIGH PRESSURE PROTECTION	4.1MPa OFF, 3.5MPa ON		
LOW PRESSURE PROTECTION	0.10MPa OFF, 0.12MPa ON		
FAN MOTOR THERMAL PROTECTOR	130℃ ± 5℃ OFF, 83℃ ± 15℃ ON		

Refrigerant R410A
INVERTER

AIRSTAGE™
V SERIES

4. INDOOR UNITS

4-1. MODEL LINE UP

■ LINE UP

Various combinations of types and capacity 11 types 50 models, ranging from 2.20kW to 25.4kW.

Capacity \ Type		Compact Cassette	Cassette	Compact Duct	Low Static Pressure Duct	Duct	High Static Pressure Duct
* kW	Model code						
2.20	7	●		●			
2.80	9	●		●			
3.60	12	●		●			
4.05	14	●		●			
5.30	18	●		●			
5.70	20		● Slim Type				
6.80	24						
7.05	25		● Slim Type		●	●	
8.80	30		● Slim Type		●	●	
10.5	36		●		●	●	●
12.7	45		●		●	●	●
14.1	54		●				
17.0	60						●
25.4	90						●

Capacity \ Type		Floor / Ceiling	Ceiling	Compact Wall Mounted (Comfort model)	Wall Mounted	Ceiling Wall
* kW	Model code					
2.20	7			●		●
2.80	9			●		●
3.60	12	●		●		●
4.05	14	●		●		●
5.30	18	●			●	●
5.70	20					
6.80	24	●			●	●
7.05	25					
8.80	30		●		●	●
10.5	36		●			
12.7	45		●			
14.1	54		●			
17.0	60					
25.4	90					

* The kW shown in the table are reference values, so refer to the rated values in the 4-3 SPECIFICATIONS for details.

INDOOR UNIT

■ APPLICABLE OUTDOOR UNIT

Series	Refrierant type	Type	Model
S ✳2)	R22	Cooling only	AO✳90APCMF, AO✳72APCMF
		Heat Pump	AO✳90RPCMF, AO✳72RPCMF
	R407C	Cooling only	AO✳90EPCMF, AO✳72EPCMF
		Heat Pump	AO✳90TPCMF, AO✳72TPCMF
		Heat recovery ✳1)	AO✳90MPBMF, AO✳90MPCMF
V	R410A	Heat Pump Master	AJ✳A72LATF, AJ✳A72LBTF
			AJ✳A90LATF, AJ✳A90LBTF
			AJ✳126LATF, AJ✳126LBTF
		Heat Pump Slave	AJ✳A72UATF, AJ✳A72UBTF
			AJ✳A90UATF, AJ✳A90UBTF
			AJ✳126UATF, AJ✳126UBTF

✳1) Compact Wall Mounted type can't be operated in the Heat recovery type system.

✳2) High Static Pressure Duct type ARXC90 can't be connected to the S series outdoor unit.

INDOOR UNIT

■ MODEL DESIGNATION

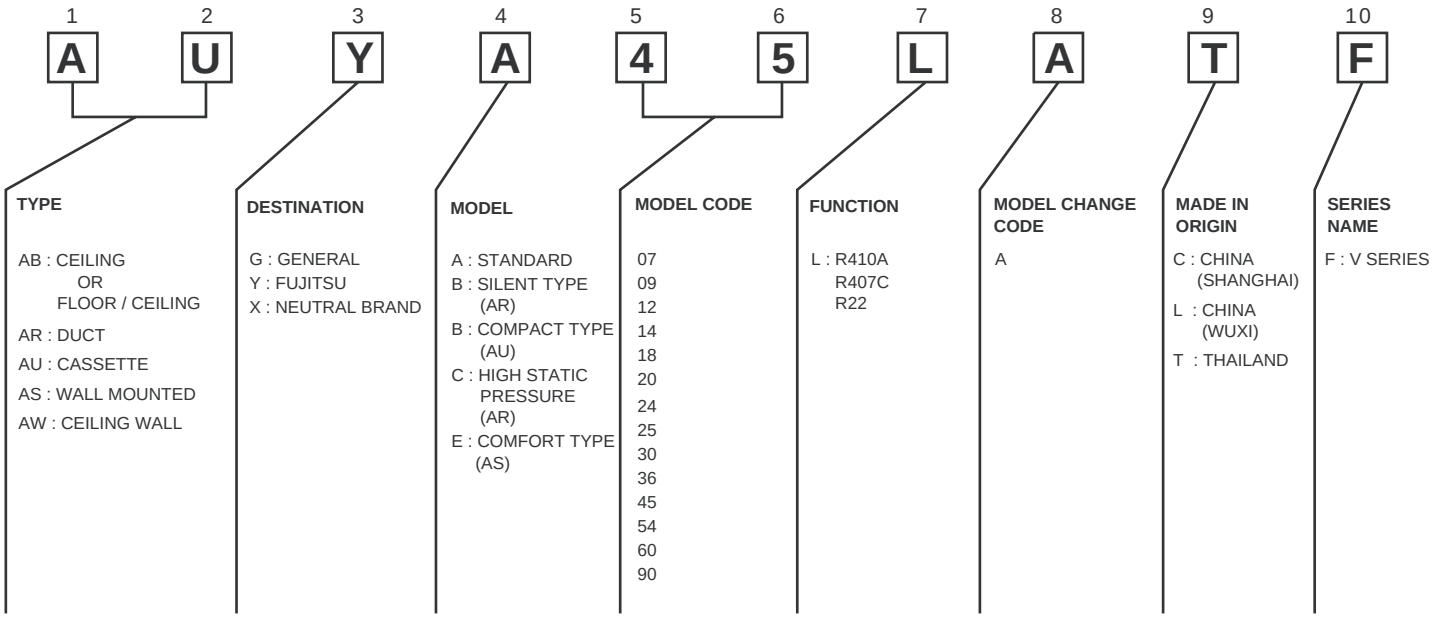

4-2. FEATURES

4-2-1. COMPACT CASSETTE TYPE

■ MODELS : AUXB07, AUXB09, AUXB12, AUXB14, AUXB18

Compact size panel design that fits standard ceiling panel (600 x 600mm).

■ FEATURES

● Comfortable airflow

4-step swing

Auto airflow direction and auto swing

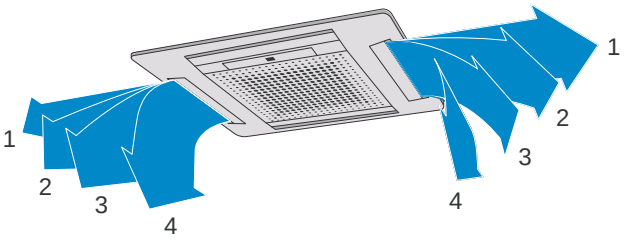

2 - 4 way airflow system

Select 2-way, 3-way or 4-way airflow to suit your needs.

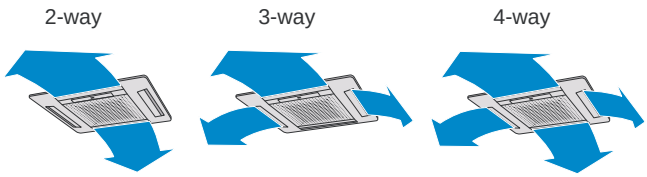

● Compact size

Compact grille that fits standard ceiling panel (600mm x 600mm)

Punch Hole Grille

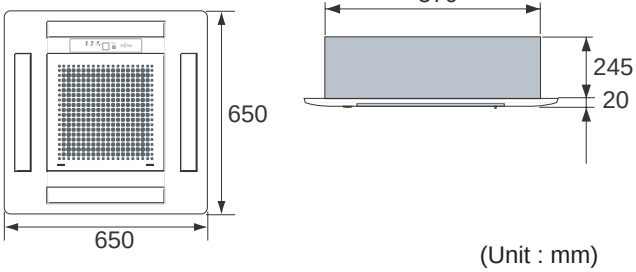

(Unit : mm)

● Condensate pump lift to 400mm

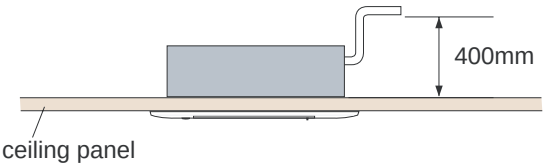

● Low noise

Large airflow and reduced noise output achieved by the use of a large diameter variable pitch turbo fan.

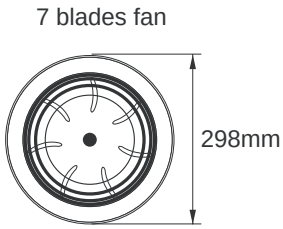

● Easy maintenance

By placing the electrical component box inside the unit easy maintenance is assured.

Wide opening for easy maintenance.

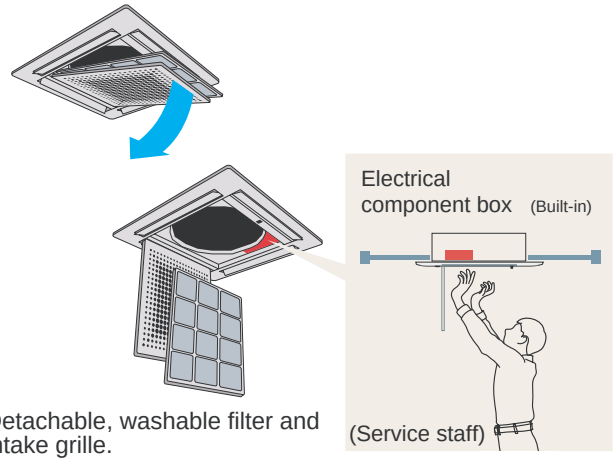

Detachable, washable filter and intake grille.

● Draft prevention

Movement of the flap angle can be changed via a simple switch during installation, thereby preventing uncomfortable drafts.

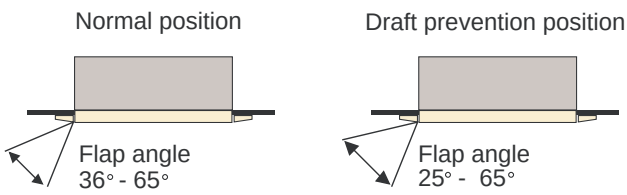

INDOOR UNIT

4-2-2. CASSETTE TYPE

■MODELS : AU∗A20, AU∗A25, AU∗A30, AU∗A36, AU∗A45, AU∗A54

Unit fascia can be adjusted up to 35mm to enable installation in a narrow ceiling.

Detachable grille makes filter maintenance easy.

■FEATURES

● Comfortable airflow

4 step swing

Auto airflow direction and auto swing

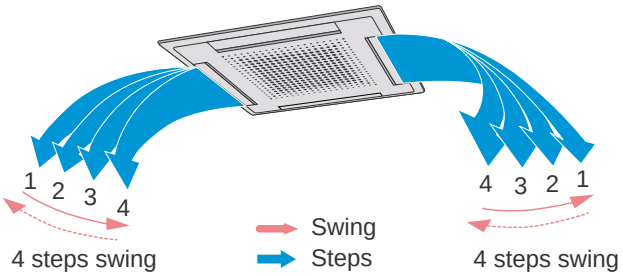

2 - 4 way airflow system

Select 2-way ,3-way or 4-way airflow to suit your needs.

2-way 3-way 4-way

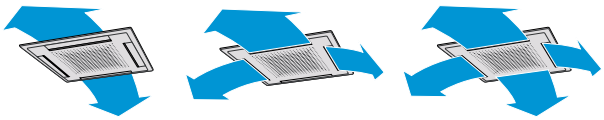

Wide airflow

Larger air flap distributes the outlet airflow a longer distance in the horizontal direction.

● Flexible installation

Compact body ensures space saving installation.
A slender fit option is available where ceiling void space is limited.

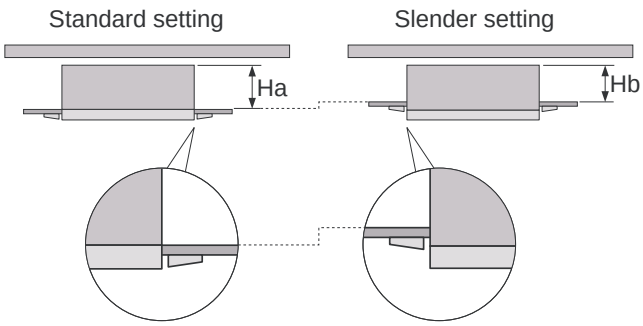

	Standard setting	Slender setting
	Ha	Hb
AU20 / AU25 / AU30	235	200
AU36 / AU45 / AU54	285	250

(Unit : mm)

● Draft prevention

Movement of the flap angle can be changed via a simple switch during installation, thereby preventing uncomfortable drafts.

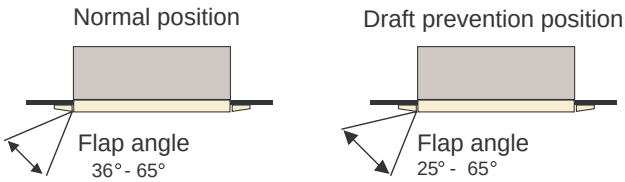

● Duct connection hole opening

Fresh air can be introduced through this opening.

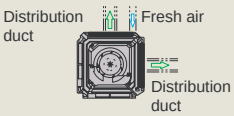

Conditioned air can be distributed by means of a distribution duct.

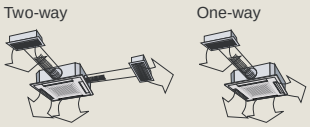

● Easy maintenance

The control box is easily accessible for maintenance work.
Wide opening for easy access.

Detachable,washable filter and intake grille.
Wide opening and long-life filter.

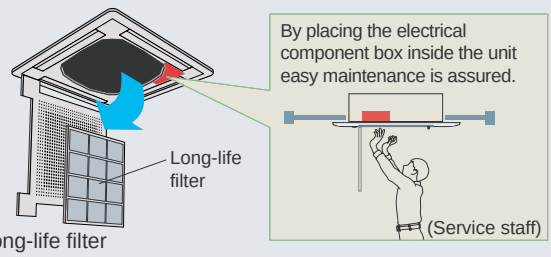

Long-life filter
High efficiency, long-life filter extends the cleaning cycle.

● Improved noise level and air distribution

Noise output has been dramatically lowered.
· Improved turbo fan shape (aerodynamic design)
· Expanded air distribution
· Low internal resistance · Moulded fan motor

● Condensate pump lift to 800mm

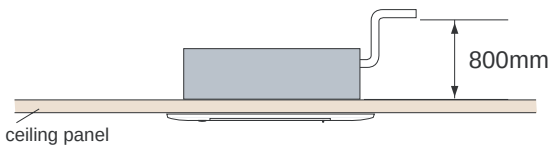

INDOOR UNIT

4-2-3. COMPACT DUCT TYPE

■MODELS : ARXB07, ARXB09, ARXB12, ARXB14, ARXB18

Small and compact indoor unit suitable for many applications.

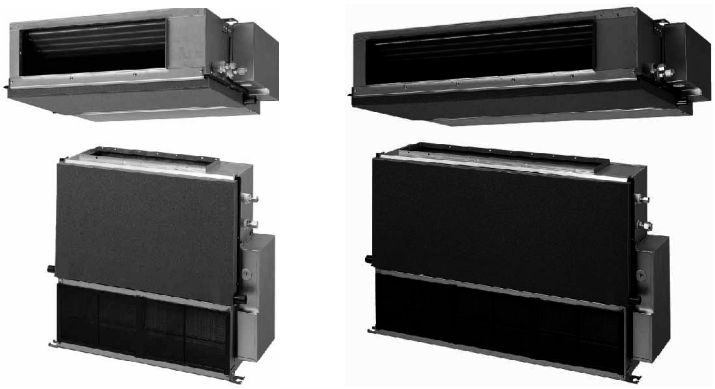

■FEATURES

● Low noise level

A low noise level has been achieved for each capacity.

Model		7	9	12	14	18
Static pr essure (Normal/Max.)	Pa	0 / 50				
Noise level (Low speed)	dB(A)	24	27	25	26	30

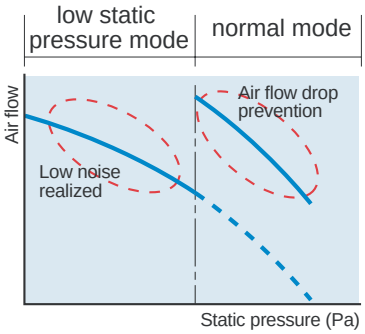

● Compact design

Ultra-slim duct air conditioner for easy installation.

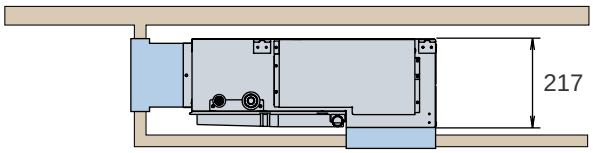

Slim size (217mm) allows installation even where the space behind the ceiling is narrow.

● Two-direction drain piping

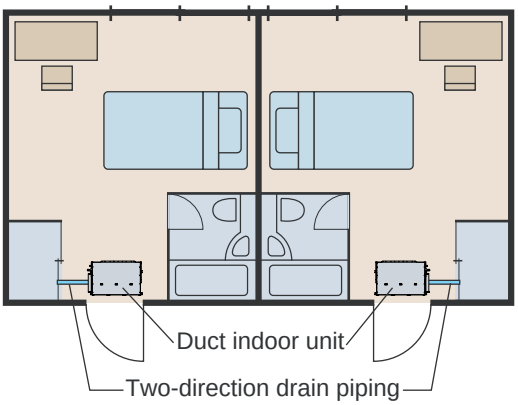

● Air-intake

Air intake direction can be selected to match the installation site.

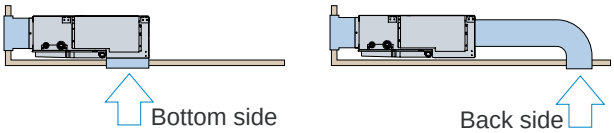

● Flexible installation

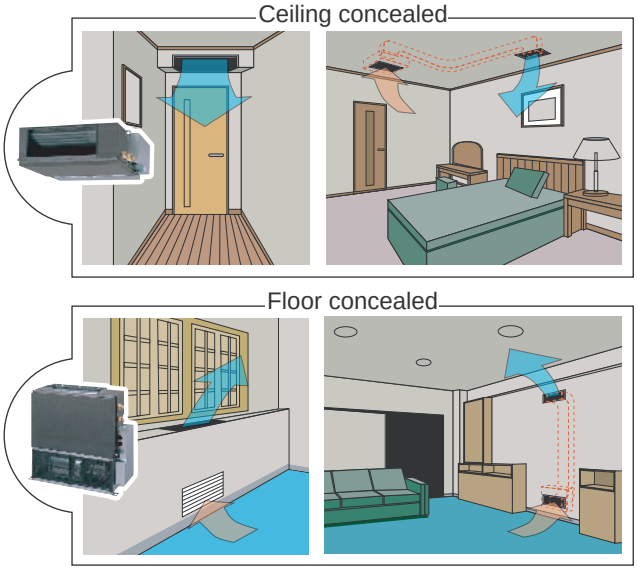

● Filter (Accessory)

ARXB07 / ARXB09

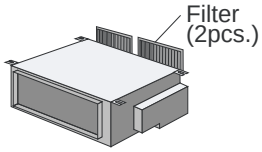

ARXB12 / ARXB14 / ARXB18

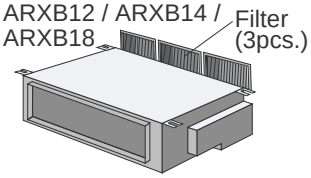

● Optional parts

Remote sensor unit	UTD-RS100
IR receiver unit	UTB-∗WA
Drain pump unit	UTZ-PX1BBA

INDOOR UNIT

4-2-4. LOW STATIC PRESSURE DUCT TYPE

■MODELS : ARXB25, ARXB30, ARXB36, ARXB45

Indoor units suitable for quiet rooms such as a hotel or a bedroom.

4-2-5. DUCT TYPE

■MODELS : ARXA25, ARXA30, ARXA36, ARXA45

Slim compact design allows for easy installation in narrow ceiling spaces up to 270mm.

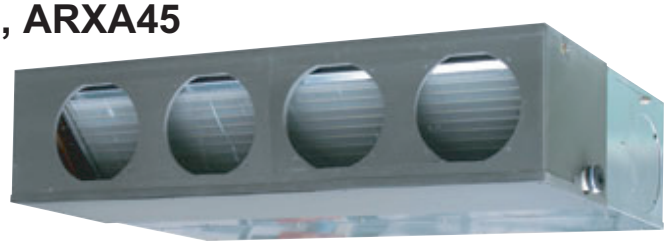

■FEATURES

● Slim & Compact design

In the case of bottom suction type, not only does the design allow for installation in narrow ceiling space up to 270mm, further space requirements have been guaranteed by placing the control box inside the chassis.

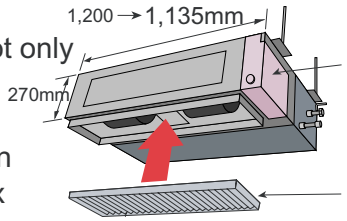

● Line-up of low-noise and high-power models, compatible with a wide range of static pressure

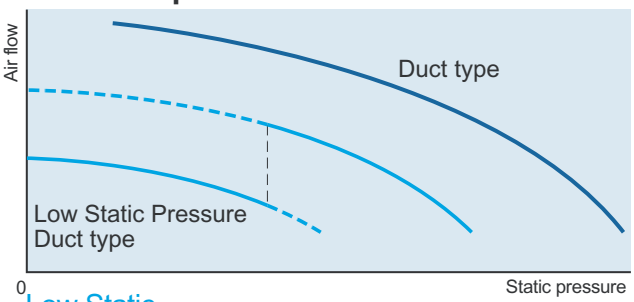

Low Static Pressure Duct type

Optimum model for hotels or bedrooms

An ultra low-noise model that achieves a quiet interior.

Perfect for hotels or bedrooms with limited air duct installation space.

Two different levels can be selected according to the static pressure range.

Duct type

Powerful model with a flexible design

With a powerful motor appropriate for a wide range of static pressure.

Flexible air duct installation is possible in a large space such as an office.

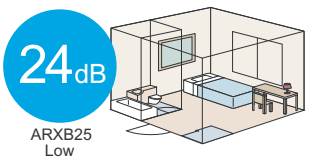

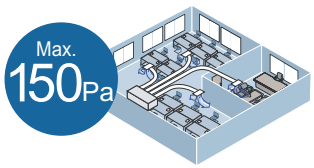

● Two-direction drain piping

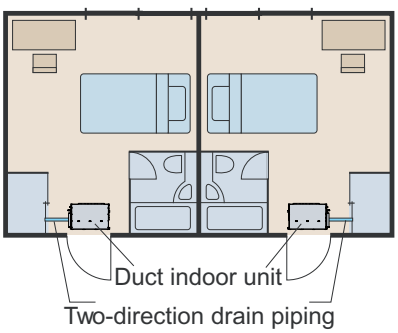

● Easy maintenance

See below for the case of rear suction type

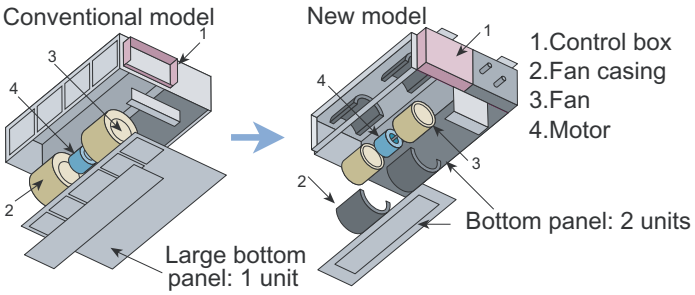

Structural improvement is attained by making the bottom panel two pieces, front and rear, and the internal fan casing is also made dismountable in two pieces, namely, upper and lower ones.
The motor and fan maintenance and dismounting can be made easily by removing the rear panel and lower part of the casing with the main chassis installed.

● Installation styles

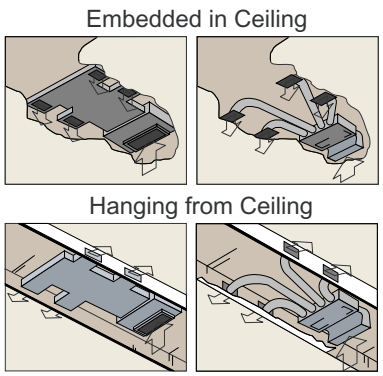

● Optional parts

Remote sensor unit	UTD-RS100
Long life filter	UTD-LF25NA
Flange (Square)	UTD-SF045T
Flange (Round)	UTD-RF204
IR receiver unit	UTB-∗WA
Drain pump unit	UTZ-PX1NBA

INDOOR UNIT

4-2-6. HIGH STATIC PRESSURE DUCT TYPE

■MODELS : ARXC36, ARXC45, ARXC60, ARXC90

These indoor units allow for high airflow quantities.

■FEATURES

● Easy installation (Compact size & Lightweight)

By downsizing basic chassis and reducing materials weight, compact size and lightweight are realized.

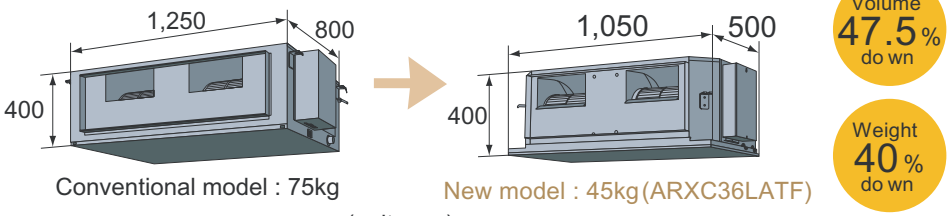

(unit: mm)

● Design also corresponding to high static pressure.

Model: ARXC90

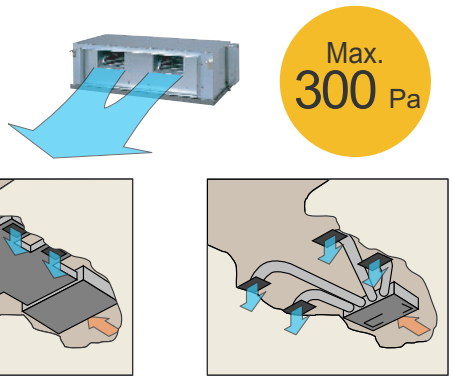

● Low noise

Turbulent airflow is reduced by cutting off the corners of conventional indoor unit front panel and fan case.

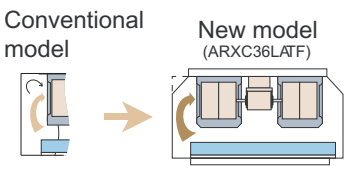

Low noise is realized by adopting plastic case, plastic fan.

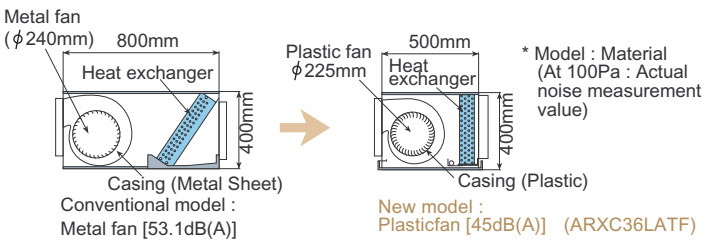

● Optional parts

Long-life filter UTD-LF60KA (For ARXC36 / 45 / 60)

IR receiver unit UTB-∗WA

INDOOR UNIT

4-2-7. FLOOR / CEILING TYPE

■MODELS : AB∗A12, AB∗A14, AB∗A18, AB∗A24

The slim and lightweight design allows the unit to be suspended from the ceiling or installed on the floor. This type suits many room designs.

INDOOR UNIT

■FEATURES

● Flexible installation

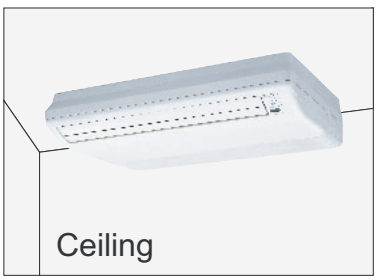

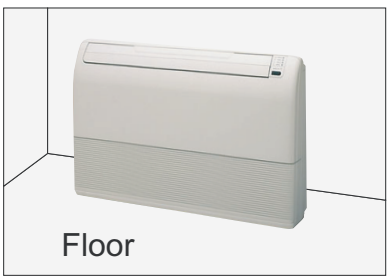

● Double auto swing

A combination of up / down and right / left directional swing
allows three-dimensional air direction control.

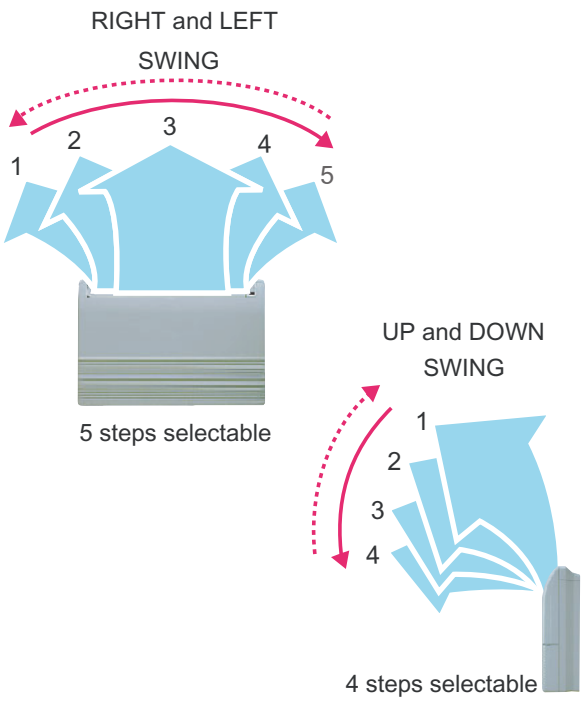

● Super vane

Double-flap "Super Vane" with newly developed special configuration boosts airflow sending cool air quickly to every corner of the room.

● Auto-closing louvre

This function is common to all indoor unit types except the duct type.

● Compact design

Symmetrical, slim and compact design.

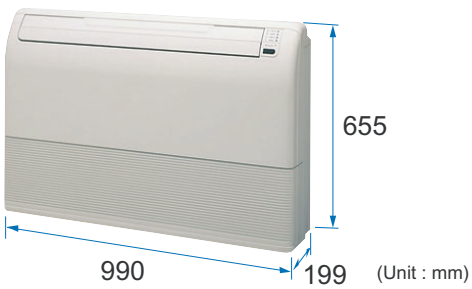

4-2-8. CEILING TYPE

■MODELS : AB∗A30, AB∗A36, AB∗A45, AB∗A54

Easily concealed in any installation.

■FEATURES

● Installation

Open	Concealed	Wall mounted
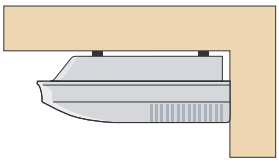	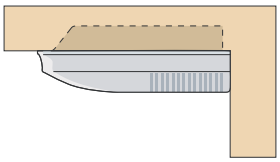	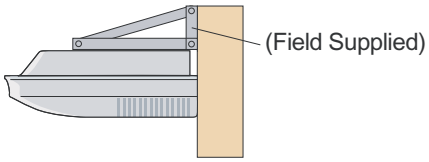
General installation pattern which suspends the indoor unit from the ceiling.	Installation pattern with part of the indoor unit embedded in the ceiling and fitted to the ceiling.	Pattern which fixes the indoor unit to a wall when it cannot be suspended because space behind the ceiling is narrow and the strength is insufficient.

● Double auto swing and wide airflow

Auto airflow direction and auto swing.

Right and left

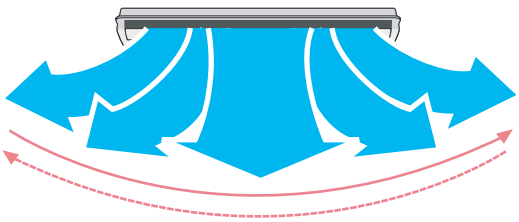

5 steps selectable

Up and down

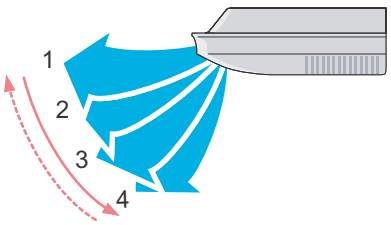

4 steps selectable

● Slim & Compact design

● Condensate lift-up mechanism (Option)

Optional drain lift-up mechanism allows flexible installation.

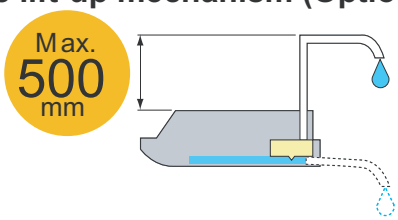

● Fresh air intake

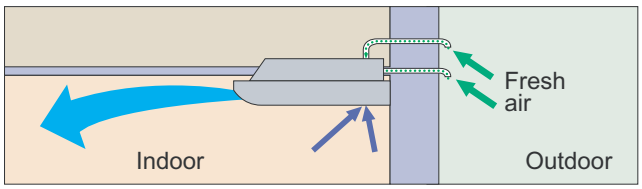

● Long airflow

Long airflow ensures comfort to every corner of a large room.

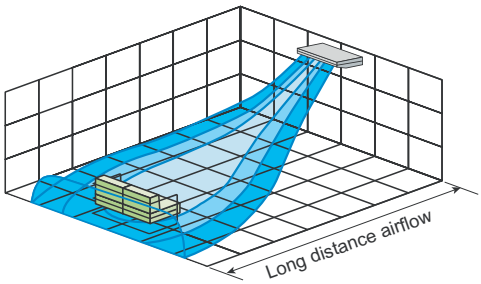

● Long-life filter

High efficiency long-life filter doubles the life of the filter compared to standard filters.

● Optional parts

Drain pump unit UTR-DPB24T

INDOOR UNIT

4-2-9. COMPACT WALL MOUNTED TYPE (Comfort model)

■MODELS : AS∗E07, AS∗E09, AS∗E12, AS∗E14

This type of indoor unit is best suited to a room where a low noise level is required.

With this model, connection of EV kit is necessary.

■FEATURES

● Filter features

High quality air conditioning by incorporation of high performance filter.

Deodorizing effect (Odor reduction rate)

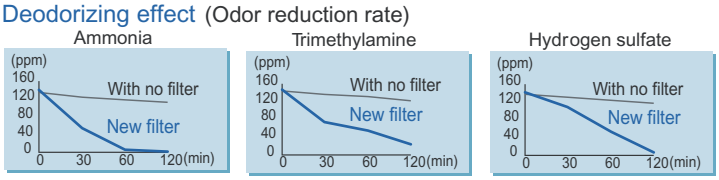

Testing organization : Environmental Sanitary Inspection Center Test method : Deodorization Test

Apple-catechin filter
Fine dust, invisible mold spores, and harmful microorganisms are absorbed onto the filter by static electricity, and further growth is inhibited and deactivated by the polyphenol ingredient extracted from apples.

Long-life* Ion deodorization filter
The filter deodorizes by powerfully decomposing absorbed odors using the oxidizing and reducing effects of ions generated by the ultra-fine-particle ceramic.

* The filter can be used for approximately 3 years if it is washed under water to restore its surface action when it is dirty.

● Low noise

26 dB (AS7)

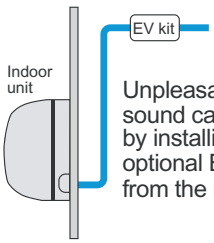

Unpleasant refrigerant sound can be reduced by installing the optional EV kit away from the indoor unit.

● Compact size

Powerful output in spite of small size

Though the indoor unit is compact, it features a large, high pressure cross fan (90mm diameter) in a centre mounted configuration and a Lambda type heat exchanger to provide plenty of power.

Width 790 mm

● Symmetrical design

Symmetrical, clean design that suits all interiors.

● New Style High Power DC fan motor

- High power
- Wide rotatition range
- High efficiency
- Compact size

● Auto swing louvre

The Auto Swing Louvre function ensures that the air direction corresponds to the mode selected.

Cooling : 2-step (①-②)
Heating : 4-step (①-④)

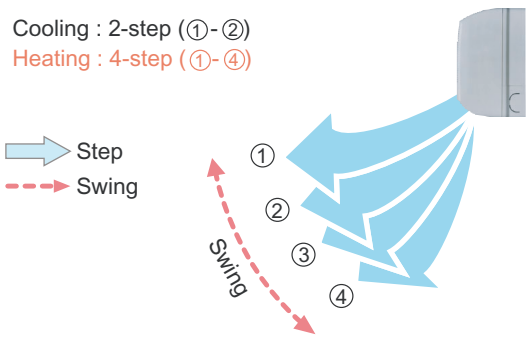

● Easy maintenance

Easy maintenance has been realized as the front panel can removed for easy access.

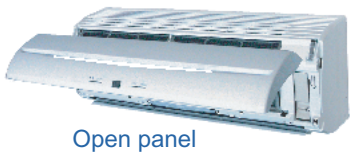

Open panel

● Wired-control acceptable

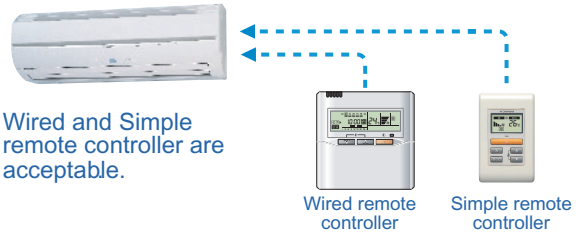

Wired and Simple remote controller are acceptable.

Wired remote controller

Simple remote controller

INDOOR UNIT

4-2-10. WALL MOUNTED TYPE

■MODELS : AS∗A18, AS∗A24, AS∗A30

Double auto swing louver provides pleasant air flow to every corner of the room.

■FEATURES

●Powerful output in spite of small size

Though the indoor unit is compact, it features a large, high pressure cross fan (107mm diameter) in a center mounted configuration and a lambda type heat exchanger to provide plenty of power. The extra long diffuser provides a wide outflow opening for air.
This ensures a large air outflow volume over a wide area to cool or heat all areas of the room.

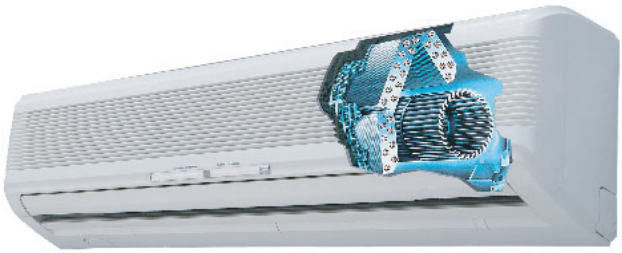

INDOOR UNIT

●Multi air flow

Large independently driven power diffuser used.

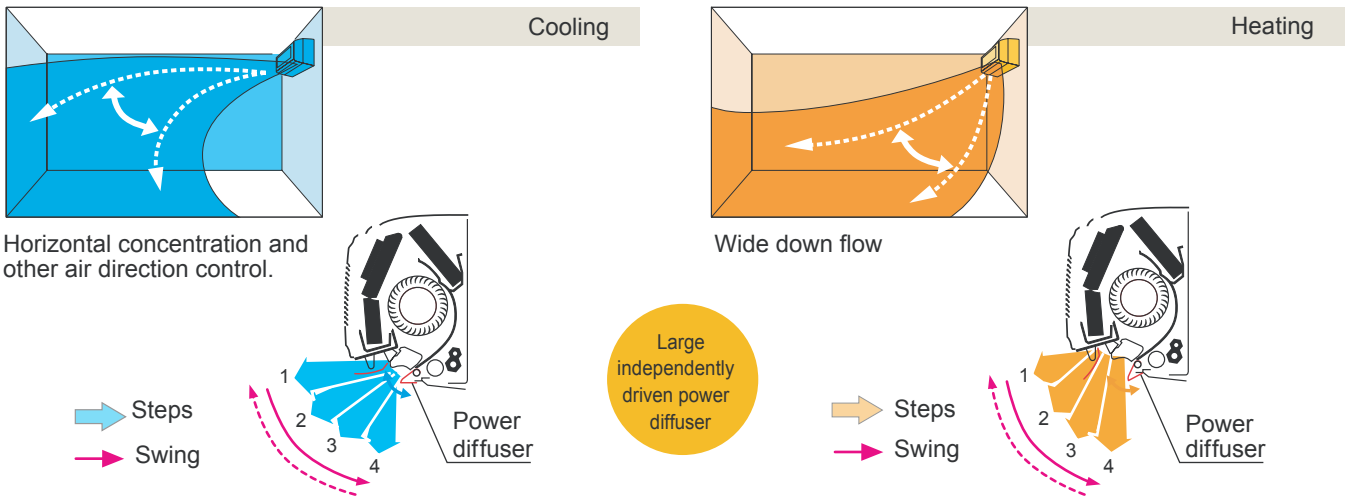

●Low noise

High efficiency fan construction
➡φ7mm Lambda type evaporator improves the airflow path.

Large independently driven power diffuser.

Low noise 33 dB (AS18)

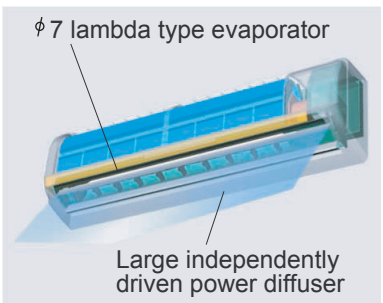

● Easier installation

Expanded work space at bottom of casing increases piping space by 15%.

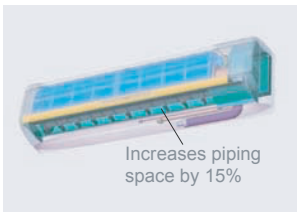

● Others

· Double auto swing
· 2-way draining route

4-2-11. CEILING WALL TYPE

■MODELS : AW∗A07, AW∗A09, AW∗A12, AW∗A14 AW∗A18, AW∗A24, AW∗A30

Attractive unit to which can be installed 40mm from the ceiling.

■FEATURES

●Larger, wider airflow

Introduction of the top air intake reduces the curvature of the air flow path thereby achieving lower air resistance, lower noise and larger air volume.

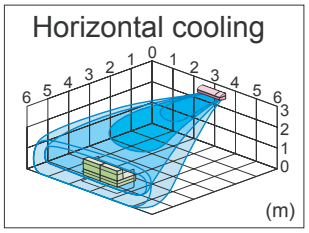

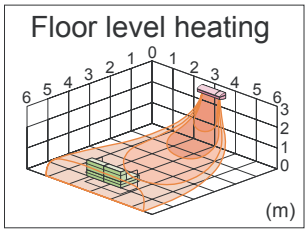

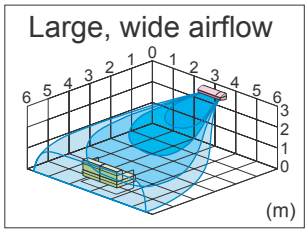

●Interior emphasized simple form

Optimum design for rooms in which you want to enjoy the interior design. This is our unique design which allows installation at a high position (on the wall near the ceiling).

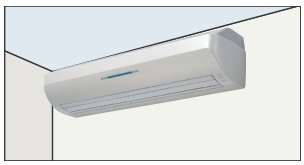

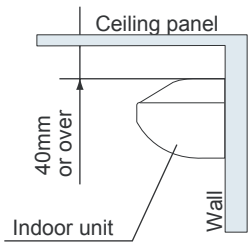

●High efficiency

High output and high efficiency are achieved by using a DC motor.

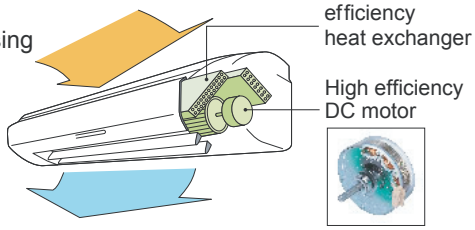

●Easy maintenance

Drain pan can be easily removed for thorough washing without removing the unit from the wall.

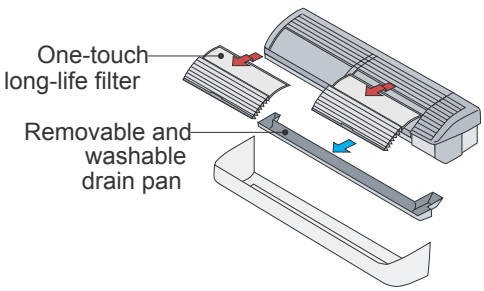

●Low noise

Suppressing the turbulence by providing vertical grooves on the quiet louver and the right / left louvre reduces annoying noise.

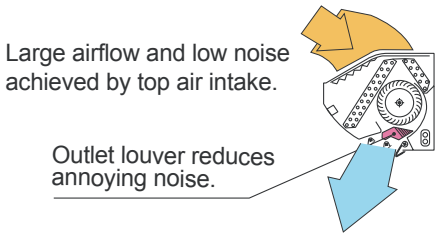

●Long-life filter

·Long-life filter can be removed with one touch.
·Long-life filter extends the cleaning cycle by a factor of three.

●Others

· Double auto swing (Right and left, up and down)
· 2-way draining route

INDOOR UNIT

4-3. SPECIFICATIONS

4-3-1. COMPACT CASSETTE TYPE

Model name				AUXB07LATF	AUXB09LATF	AUXB12LATF	AUXB14LATF	AUXB18LATF
Power source				230V ~ , 50Hz				
Available voltage range				198 to 264 V				
Capacity	Cooling		kW	2.20	2.80	3.60	4.00	5.00
	Heating			2.50	3.20	4.10	4.50	5.45
Input power			W	28	28	52	52	50
Current			A	0.13	0.13	0.23	0.23	0.22
Fan	Airflow rate	High	m^3 / h	530	530	580	580	640
		Med		480	480	520	520	540
		Low		410	410	460	460	470
	Type x Number			Turbo × 1				
	Motor output		W	9	9	10	10	15
Sound pressure level	High		dB(A)	38	38	41	41	44
	Med			35	35	37	37	38
	Low			31	31	34	34	35
Heat exchanger	Dimensions (H x W x D)		mm	308 × 700 × 38.1				
	Fin pitch			1.40				
	Rows x Stages			2 × 8				
	Pipe type			Copper				
	Fin	Type		Aluminium				
		Surface treatment		Hydrophilic coating				
Air filter	Type			Anti-mold				
	Net material			PP honeycomb				
Enclosure	Material			Metal				
	Colour			—				
Dimensions (H x W x D)	Net		mm	230 × 570 × 570				
	Gross			310 × 710 × 750				
Weight	Net		kg	18				
	Gross			23				
Connection pipe diameter	Liquid (Flare)		mm	ϕ6.35				ϕ9.52
	Gas (Flare)			ϕ12.70				ϕ15.88
Grille (Option)	Model name			UTG-UDYD-W(FUJITSU brand); UTG-UDGD-W(GENERAL brand)				
	Colour			White (5Y 9/0.5NN)				
	Dimensions (H x W x D)	Net	mm	35 × 650 × 650				
		Gross		70 × 720 × 720				
	Weight	Net	kg	2.2				
		Gross		4.3				

Note : Specifications are based on the following conditions.

Cooling : Indoor temperature of 27°CDB / 19°CWB, and outdoor temperature of 35°CDB / 24°CWB.

Heating : Indoor temperature of 20°CDB / (15°CWB), and outdoor temperature of 7°CDB / 6°CWB.

INDOOR UNIT

4-3-2. CASSETTE TYPE

Model name				AU*A20LATF	AU*A25LATF	AU*A30LATF
Power source				230V～, 50Hz		
Available voltage range				198 to 264 V		
Capacity	Cooling		kW	5.70	7.05	8.80
	Heating			5.80	7.85	9.10
Input power			W	104	124	140
Current			A	0.60	0.64	0.67
Fan	Airflow rate	High	m^3 / h	1,000	1,100	1,250
		Med		840	940	1,050
		Low		700	780	840
	Type x Number			Turbo × 1		
	Motor output		W	40		
Sound pressure level	High		dB(A)	41	43	46
	Med			37	40	43
	Low			33	35	37
Heat exchanger	Dimensions (H x W x D)		mm	(210 × 970 × 26.6) x 2		
	Fin pitch			1.30		
	Rows x Stages			2 × 10		
	Pipe type			Copper		
	Fin	Type		Aluminium		
		Surface treatment		Hydrophilic coating		
Air filter	Type			Anti-mold		
	Net material			PP honeycomb		
Enclosure	Material			Plastic		
	Colour			White (5Y 9/0.5NN)		
Dimensions (H x W x D)	Net	Main body	mm	246 × 830 × 830		
		With panel		265 × 940 × 940		
	Gross			385 × 1,045 × 1,015		
Weight	Net		kg	34		
	Gross			45		
Connection pipe diameter	Liquid (Flare)		mm	ϕ9.52		
	Gas (Flare)			ϕ15.88		

Note : Specifications are based on the following conditions.

Cooling : Indoor temperature of 27°CDB / 19°CWB, and outdoor temperature of 35°CDB / 24°CWB.

Heating : Indoor temperature of 20°CDB / (15°CWB), and outdoor temperature of 7°CDB / 6°CWB.

INDOOR UNIT

4-3-2. CASSETTE TYPE

Model name				AU*A36LATF	AU*A45LATF	AU*A54LATF
Power source				230V～, 50Hz		
Available voltage range				198 to 264 V		
Capacity	Cooling		kW	10.5	12.7	14.1
	Heating			12.7	13.7	15.8
Input power			W	175	190	219
Current			A	0.92	0.94	0.95
Fan	Airflow rate	High	m^3 / h	1,500	1,550	1,700
		Med		1,300	1,350	1,420
		Low		1,100	1,100	1,200
	Type x Number			Turbo × 1		
	Motor output		W	100		
Sound pressure level	High		dB(A)	47	48.5	51.5
	Med			42.5	46	47.5
	Low			38	41	43.5
Heat exchanger	Dimensions (H x W x D)		mm	(252 × 970 × 26.6) x 2	(252 × 970 × 39.9) x 2	
	Fin pitch			1.30	1.40	
	Rows x Stages			2 × 12	3 × 12	3 × 12
	Pipe type			Copper		
	Fin	Type		Aluminium		
		Surface treatment		Hydrophilic coating		
Air filter	Type			Anti-mold		
	Net material			PP honeycomb		
Enclosure	Material			Plastic		
	Colour			White (5Y 9/0.5NN)		
Dimensions (H x W x D)	Net	Main body	mm	296 × 830 × 830		
		With panel		315 × 940 × 940		
	Gross			435 × 1,045 × 1,015		
Weight	Net		kg	40		
	Gross			53		
Connection pipe diameter	Liquid (Flare)		mm	ϕ 9.52		
	Gas (Flare)			ϕ19.05		

Note : Specifications are based on the following conditions.

Cooling : Indoor temperature of 27°CDB / 19°CWB, and outdoor temperature of 35°CDB / 24°CWB.

Heating : Indoor temperature of 20°CDB / (15°CWB), and outdoor temperature of 7°CDB / 6°CWB.

INDOOR UNIT

4-3-3. COMPACT DUCT TYPE

Model name				ARXB07LALF	ARXB09LALF	ARXB12LALF	ARXB14LALF	ARXB18LALF
Power source				230V～, 50Hz				
Available voltage range				198 to 264 V				
Capacity	Cooling		kW	2.20	2.80	3.60	4.00	5.30
	Heating			2.50	3.20	4.10	4.80	5.60
Input power			W	31.2	32.6	55.0	63.0	103
Current			A	0.14	0.16	0.25	0.29	0.45
Static pressure range			Pa	0 to 50	0 to 50	0 to 50	0 to 50	0 to 50
Fan	Airflow rate	High	m^3 / h	330	370	560	610	950
		Med		300	340	500	550	790
		Low		270	310	420	470	620
	Type x Number			Sirocco × 1		Sirocco × 2		
	Motor output		W	7.5	10.8	19	23	52
Sound pressure level	High		dB(A)	29	31	30	31	40
	Med			27	29	28	29	35
	Low			24	27	25	26	30
Heat exchanger	Dimensions (H x W x D)		mm	294 × 410 × 26.6		294 × 700 × 26.6		
	Fin pitch			1.30				
	Rows x Stages			2 × 14				
	Pipe type			Copper				
	Fin	Type		Aluminium				
		Surface treatment		PP monofilament net				
Air filter	Type			Anti-mold				
	Net material			PP honeycomb				
Enclosure	Material			Metal				
	Colour			—				
Dimensions (H x W x D)	Net		mm	217 × 663 × 595		217 × 953 × 595		
	Gross			324 × 785 × 686		324 × 1,075 × 686		
Weight	Net		kg	18		25		
	Gross			22		29		
Connection pipe diameter	Liquid (Flare)		mm	ϕ 6.35				ϕ 9.52
	Gas (Flare)			ϕ12.70				ϕ15.88

Note : Specifications are based on the following conditions.

Cooling : Indoor temperature of 27°CDB / 19°CWB, and outdoor temperature of 35°CDB / 24°CWB.

Heating : Indoor temperature of 20°CDB / (15°CWB), and outdoor temperature of 7°CDB / 6°CWB.

Standard static pressure : 0 Pa.

INDOOR UNIT

4-3-4. LOW STATIC PRESSURE DUCT TYPE

Model name				ARXB25LATF	ARXB30LATF	ARXB36LATF	ARXB45LATF
Power source				230V ~ , 50Hz			
Available voltage range				198 to 264 V			
Capacity	Cooling		kW	7.00	8.80	10.5	12.7
	Heating			7.70	9.50	12.7	14.3
Input power			W	155	171	216	246
Current			A	0.70	0.75	0.92	1.12
Static pressure range			Pa	0 to 80	0 to 80	0 to 80	0 to 80
Fan	Airflow rate	High	m^3 / h	1,090	1,200	1,440	1,580
		Med		970	1,090	1,270	1,450
		Low		870	970	1,160	1,320
	Type x Number			Sirocco ×2			
	Motor output		W	46.9	62.8	74	131
Sound pressure level	High		dB(A)	29	31	35	37
	Med			26	28	32	35
	Low			24	26	30	33
Heat exchanger	Dimensions (H x W x D)		mm	294 × 1,000 × 39.9			294 × 1,000 × 53.2
	Fin pitch			1.40			
	Rows x Stages			3 × 14			4 × 14
	Pipe type			Copper			
	Fin	Type		Aluminium			
		Surface treatment		Hydrophilic coating			
Air filter (Option)	Model name			UTD-LF25NA			
	Type			Fungicide type			
	Net material			PP honeycomb			
Enclosure	Material			Metal			
	Colour			—			
Dimensions (H x W x D)	Net		mm	270 × 1,135 × 700			
	Gross			300 × 1,320 × 790			
Weight	Net		kg	43			45
	Gross			50			52
Connection pipe diameter	Liquid (Flare)		mm	ϕ9.52			
	Gas (Flare)			ϕ15.88		ϕ19.05	

Note : Specifications are based on the following conditions.

Cooling : Indoor temperature of 27°CDB / 19°CWB, and outdoor temperature of 35°CDB / 24°CWB.

Heating : Indoor temperature of 20°CDB / (15°CWB), and outdoor temperature of 7°CDB / 6°CWB.

Standard static pressure : 0 Pa

INDOOR UNIT

4-3-5. DUCT TYPE

Model name				ARXA25LATF	ARXA30LATF	ARXA36LATF	ARXA45LATF
Power source				230V ~ , 50Hz			
Available voltage range				198 to 264 V			
Capacity	Cooling		kW	7.00	8.80	10.5	12.7
	Heating			7.70	9.50	12.7	14.3
Input power			W	161	172	220	312
Current			A	0.70	0.75	0.92	1.49
Static pressure range			Pa	30 to 150	30 to 150	30 to 150	30 to 150
Fan	Airflow rate	High	m^3 / h	1,100	1,400	1,750	1,800
		Med		1,000	1,300	1,650	1,600
		Low		900	1,200	1,550	1,500
	Type x Number			Sirocco × 2			
	Motor output		W	70		275	
Sound pressure level	High		dB(A)	38	40	43	44
	Med			36	38	41	42
	Low			34	36	39	40
Heat exchanger	Dimensions (H x W x D)		mm	294 × 1,000 × 39.9			294 × 1,000 × 53.2
	Fin pitch			1.40			
	Rows x Stages			3 × 14			4 × 14
	Pipe type			Copper			
	Fin	Type		Aluminium			
		Surface treatment		Hydrophilic coating			
Air filter (Option)	Model name			UTD-LF25NA			
	Type			Fungicide type			
	Net material			PP honeycomb			
Enclosure	Material			Metal			
	Colour			—			
Dimensions (H x W x D)	Net		mm	270 × 1,135 × 700			
	Gross			300 × 1,320× 790			
Weight	Net		kg	43			45
	Gross			50			52
Connection pipe diameter	Liquid (Flare)		mm	ϕ9.52			
	Gas (Flare)			ϕ15.88		ϕ19.05	

Note : Specifications are based on the following conditions.

Cooling : Indoor temperature of 27°CDB / 19°CWB, and outdoor temperature of 35°CDB / 24°CWB.

Heating : Indoor temperature of 20°CDB / (15°CWB), and outdoor temperature of 7°CDB / 6°CWB.

Standard static pressure : 100 Pa.

INDOOR UNIT

4-3-6. HIGH STATIC PRESSURE DUCT TYPE

Model name				ARXC36LATF	ARXC45LATF	ARXC60LATF	ARXC90LATF
Power source				230 V ~ , 50Hz			3~ 400V, 50Hz
							230 V ~ , 50Hz
Available voltage range				198 to 264 V			380 to 415 V
							198 to 264 V
Capacity	Cooling		kW	10.5	12.7	17.0	25.4
	Heating			12.7	14.3	18.2	29.5
Input power			W	405	427	427	970
Current			A	1.76	1.85	1.85	1.63
Static pressure range			Pa	100 to 200	100 to 250	100 to 250	100 to 300
Fan	Airflow rate	High	m^3 / h	2,500	3,500	3,500	3,950
		Med		1,950	3,000	3,000	—
		Low		1,450	2,460	2,460	—
	Type x Number			Sirocco × 2			
	Motor output		W	240	540		580
Sound pressure level	High		dB(A)	45	49	49	50
	Med			38	45	45	—
	Low			32	42	42	—
Heat exchanger	Dimensions (H x W x D)		mm	336 × 890 × 53.2			378 × 1,250 × 53.2
	Fin pitch			1.30		1.45	1.45
	Rows x Stages			4 × 16			4 × 18
	Pipe type			Copper			
	Fin	Type		Aluminium			
		Surface treatment		Hydrophilic coating			
Air filter (Option)	Model name			UTD-LF60KA			—
	Type			Fungicide type			
	Net material			PP honeycomb			
Enclosure	Material			Metal			
	Colour			—			
Dimensions (H x W x D)	Net		mm	400 × 1,050 × 500			450 × 1,550 × 700
	Gross			460 × 1,230 × 640			550 × 1,750 × 825
Weight	Net		kg	45		50	82
	Gross			50		55	97
Connection pipe diameter	Liquid		mm	ϕ 9.52(Flare)			ϕ12.70 (Brazing)
	Gas			ϕ19.05 (Flare)			ϕ 22.22 (Brazing)

Note : Specifications are based on the following conditions.

Cooling : Indoor temperature of 27°CDB / 19°CWB, and outdoor temperature of 35°CDB / 24°CWB.

Heating : Indoor temperature of 20°CDB / (15°CWB), and outdoor temperature of 7°CDB / 6°CWB.

Standard static pressure : 100 Pa (ARXC36LATF, ARXC45LATF, ARXC60LATF).

Standard static pressure : 200 Pa (ARXC90LATF).

INDOOR UNIT

4-3-7. FLOOR / CEILING TYPE

Model name				AB*A12LATF	AB*A14LATF	AB*A18LATF	AB*A24LATF
Power source				230V～, 50Hz			
Available voltage range				198 to 264 V			
Capacity	Cooling		kW	3.60	4.05	5.30	6.60
	Heating			4.10	5.00	5.60	7.70
Input power			W	57	57	88	88
Current			A	0.25	0.25	0.38	0.38
Fan	Airflow rate	High	m^3 / h	640	640	780	880
		Med		560	560	650	740
		Low		480	480	550	630
	Type x Number			Sirocco × 2			
	Motor output		W	16		30	40
Sound pressure level	High		dB(A)	40	40	46	48
	Med			37	37	41.5	44
	Low			34	34	37	40
Heat exchanger	Dimensions (H x W x D)		mm	252 × 800 × 26.6		252 × 800 × 39.9	
	Fin pitch			1.45			
	Rows x Stages			2 × 12		3 × 12	
	Pipe type			Copper			
	Fin	Type		Aluminium			
		Surface treatment		Hydrophilic coating			
Air filter	Type			Anti-mold			
	Net material			PP monofilament net			
Enclosure	Material			Plastic			
	Colour			White (5Y 9/0.5NN)			
Dimensions (H x W x D)	Net		mm	199 × 990 × 655			
	Gross			320 × 1,150 × 790			
Weight	Net		kg	28			
	Gross			37			
Connection pipe diameter	Liquid (Flare)		mm	ϕ6.35		ϕ 9.52	
	Gas (Flare)			ϕ12.70		ϕ15.88	

Note : Specifications are based on the following conditions.

Cooling : Indoor temperature of 27°CDB / 19°CWB, and outdoor temperature of 35°CDB / 24°CWB.

Heating : Indoor temperature of 20°CDB / (15°CWB), and outdoor temperature of 7°CDB / 6°CWB.

INDOOR UNIT

4-3-8. CEILING TYPE

Model name				AB*A30LATF	AB*A36LATF	AB*A45LATF	AB*A54LATF
Power source				230V ~ , 50Hz			
Available voltage range				198 to 264 V			
Capacity	Cooling		kW	8.80	10.5	12.7	14.1
	Heating			9.10	12.7	13.7	15.8
Input power			W	124	144	160	180
Current			A	1.14	1.16	1.17	1.17
Fan	Airflow rate	High	m^3 / h	1,450	1,660	1,850	2,200
		Med		1,280	1,500	1,660	2,000
		Low		980	1,270	1,430	1,800
	Type x Number			Sirocco × 4			
	Motor output		W	160			
Sound pressure level	High		dB(A)	42	45	48	52
	Med			39	42	46	50
	Low			35	37	41	46
Heat exchanger	Dimensions (H x W x D)		mm	252 × 1,350 × 26.6	252 × 1,350 × 39.9		
	Fin pitch			1.30	1.45		
	Rows x Stages			2 × 12	3 × 12		
	Pipe type			Copper			
	Fin	Type		Aluminium			
		Surface treatment		Hydrophilic coating			
Air filter	Type			Anti-mold			
	Net material			PP monofilament net			
Enclosure	Material			Plastic			
	Colour			White (5Y 9/0.5NN)			
Dimensions (H x W x D)	Net		mm	240 × 1,660 × 700			
	Gross			318 × 1,800 × 790			
Weight	Net		kg	48			
	Gross			61			
Connection pipe diameter	Liquid (Flare)		mm	ϕ 9.52			
	Gas (Flare)			ϕ15.88	ϕ19.05		

Note : Specifications are based on the following conditions.

Cooling : Indoor temperature of 27°CDB / 19°CWB, and outdoor temperature of 35°CDB / 24°CWB.

Heating : Indoor temperature of 20°CDB / (15°CWB), and outdoor temperature of 7°CDB / 6°CWB.

INDOOR UNIT

4-3-9. COMPACT WALL MOUNTED TYPE (Comfort model)

Model name				AS*E07LACF	AS*E09LACF	AS*E12LACF	AS*E14LACF
Power source				230V～, 50Hz			
Available voltage range				198 to 264 V			
Capacity	Cooling		kW	2.20	2.80	3.60	4.00
	Heating			2.50	3.20	4.10	4.80
Input power			W	13	13	17	19
Current			A	0.15	0.15	0.18	0.20
Fan	Airflow rate	High	m^3 / h	490	490	560	600
		Med		450	450	480	490
		Low		370	370	420	420
	Type x Number			Cross flow × 1			
	Motor output		W	42			
Sound pressure level	High		dB(A)	34	34	38	39
	Med			32	32	34	35
	Low			26	26	30	30
Heat exchanger	Dimensions (H x W x D)		mm	336 × 635 × 26.6			
	Fin pitch			1.20			
	Rows x Stages			2 × 16			
	Pipe type			Copper			
	Fin	Type		Aluminium			
		Surface treatment		Hydrophilic coating			
Air filter	Type			Antibacterial and Mold proofing, Ion deodorization			
	Net material			PP honeycomb			
Enclosure	Material			Plastic			
	Colour			White (N9)			
Dimensions (H x W x D)	Net		mm	275 × 790 × 215			
	Gross			290 × 835 × 345			
Weight	Net		kg	9			
	Gross			12			
Connection pipe diameter	Liquid (Flare)		mm	ϕ 6.35			
	Gas (Flare)			ϕ 12.70			
EV Kit (Option)				UTR - EV09XA		UTR - EV14XA	

Note : Specifications are based on the following conditions.

Cooling : Indoor temperature of 27°CDB / 19°CWB, and outdoor temperature of 35°CDB / 24°CWB.

Heating : Indoor temperature of 20°CDB / (15°CWB), and outdoor temperature of 7°CDB / 6°CWB.

INDOOR UNIT

4-3-10. WALL MOUNTED TYPE

Model name				AS*A18LATF	AS*A24LATF	AS*A30LATF
Power source				230V～, 50Hz		
Available voltage range				198 to 264 V		
Capacity	Cooling		kW	5.40	6.90	8.00
	Heating			5.60	7.80	8.80
Input power			W	38	50	60
Current			A	0.18	0.24	0.28
Fan	Airflow rate	High	m^3/h	800	970	1040
		Med		650	870	910
		Low		550	750	730
	Type x Number			Cross flow × 1		
	Motor output		W	38	38	38
Sound pressure level	High		dB(A)	41	45	47.5
	Med			36.5	41	44
	Low			33	37	39.5
Heat exchanger	Dimensions (H x W x D)		mm	336 × 855 × 26.6		336 × 855 × 26.6 84 × 855 × 13.3
	Fin pitch			1.20		1.20 1.40
	Rows x Stages			2 × 16		
	Pipe type			Copper		
	Fin	Type		Aluminium		
		Surface treatment		Hydrophilic coating		
Air filter	Type			Deodorization / Anti-mold		
	Net material			PP monofilament net		
Enclosure	Material			Plastic		
	Colour			White (N9)		
Dimensions (H x W x D)	Net		mm	320 × 1,120 × 220		
	Gross			348 × 1,240 × 427		
Weight	Net		kg	16		
	Gross			22		
Connection pipe diameter	Liquid (Flare)		mm	ϕ9.52		
	Gas (Flare)			ϕ15.88		

Note : Specifications are based on the following conditions.

Cooling : Indoor temperature of 27°CDB / 19°CWB, and outdoor temperature of 35°CDB / 24°CWB.

Heating : Indoor temperature of 20°CDB / (15°CWB), and outdoor temperature of 7°CDB / 6°CWB.

INDOOR UNIT

4-3-11. CEILING WALL TYPE

Model name				AW*A07LATF	AW*A09LATF	AW*A12LATF	AW*A14LATF	AW*A18LATF	AW*A24LATF	AW*A30LATF
Power source				230V ~ , 50Hz						
Available voltage range				198 to 264 V						
Capacity	Cooling		kW	2.20	2.80	3.60	4.30	5.40	6.90	8.00
	Heating			2.50	3.20	4.10	4.90	5.60	7.80	8.80
Input power			W	16	19	20	21	30	40	50
Current			A	0.08	0.09	0.10	0.10	0.14	0.19	0.24
Fan	Airflow rate	High	m^3 / h	380	480	600	650	760	900	950
		Med		330	420	520	570	660	780	870
		Low		290	390	470	490	560	650	780
	Type x Number			Cross flow ×1						
	Motor output		W	32						
Sound pressure level	High		dB(A)	34	35	35	37	40	44	47
	Med			32	32	33	35	37	41	45
	Low			30	30	31	32	34	37	42
Heat exchanger	Dimensions (H x W x D)		mm	315 × 905 × 26.6						315 × 905 × 26.6 315 × 905 × 13.3
	Fin pitch			1.20						1.20 1.40
	Rows x Stages			2 × 15						2 × 15 1 × 4
	Pipe type			Copper						
	Fin	Type		Aluminium						
		Surface treatment		Hydrophilic coating						
Air filter	Type			Anti-mold						
	Net material			PP monofilament net						
Enclosure	Material			Plastic						
	Colour			White + GRAY (10BG 9/0.5NN+5B 7.5/0.5NN)						
Dimensions (H x W x D)	Net		mm	270 × 1,150 × 285						
	Gross			400 × 1,260 × 380						
Weight	Net		kg	16						
	Gross			20						
Connection pipe diameter	Liquid (Flare)		mm	ϕ 6.35				ϕ 9.52		
	Gas (Flare)			ϕ12.70				ϕ15.88		

Note : Specifications are based on the following conditions.

Cooling : Indoor temperature of 27°CDB / 19°CWB, and outdoor temperature of 35°CDB / 24°CWB.

Heating : Indoor temperature of 20°CDB / (15°CWB), and outdoor temperature of 7°CDB / 6°CWB.

INDOOR UNIT

4-4. ELECTRIC CHARACTERISTICS

Indoor Unit		Power Supply				Indoor Fan Motor	
Type	Model	Voltage (V)	Frequency (Hz)	MCA (A)	MFA (A)	Input Power (kW)	Full Load Amp (A)
Compact Cassette	AUXB07LATF	230 ~	50	0.15	Note	0.028	0.13
	AUXB09LATF			0.15		0.028	0.13
	AUXB12LATF			0.27		0.052	0.23
	AUXB14LATF			0.27		0.052	0.23
	AUXB18LATF			0.26		0.050	0.22
Cassette (Slim Type)	AU*A20LATF	230 ~	50	0.72	Note	0.104	0.60
	AU*A25LATF			0.77		0.124	0.64
	AU*A30LATF			0.80		0.140	0.67
Cassette	AU*A36LATF	230 ~	50	1.10	Note	0.175	0.92
	AU*A45LATF			1.12		0.190	0.94
	AU*A54LATF			1.14		0.219	0.95
Compact Duct	ARXB07LALF	230 ~	50	0.17	Note	0.0312	0.14
	ARXB09LALF			0.19		0.0326	0.16
	ARXB12LALF			0.30		0.055	0.25
	ARXB14LALF			0.35		0.063	0.29
	ARXB18LALF			0.54		0.103	0.45
Low Static Pressure Duct	ARXB25LATF	230 ~	50	0.84	Note	0.155	0.70
	ARXB30LATF			0.90		0.171	0.75
	ARXB36LATF			1.10		0.216	0.92
	ARXB45LATF			1.34		0.246	1.12
Duct	ARXA25LATF	230 ~	50	0.84	Note	0.161	0.70
	ARXA30LATF			0.90		0.172	0.75
	ARXA36LATF			1.10		0.220	0.92
	ARXA45LATF			1.79		0.312	1.49
High Static Pressure Duct	ARXC36LATF	230 ~	50	2.11	Note	0.405	1.76
	ARXC45LATF			2.22		0.427	1.85
	ARXC60LATF			2.22		0.427	1.85
	ARXC90LATF	230 ~		0.50		-	-
		3 ~ 400		1.95		0.970	1.63
Floor / Ceiling	AB*A12LATF	230 ~	50	0.30	Note	0.057	0.25
	AB*A14LATF			0.30		0.057	0.25
	AB*A18LATF			0.45		0.088	0.38
	AB*A24LATF			0.45		0.088	0.38
Ceiling	AB*A30LATF	230 ~	50	1.36	Note	0.124	1.14
	AB*A36LATF			1.39		0.144	1.16
	AB*A45LATF			1.40		0.160	1.17
	AB*A54LATF			1.40		0.180	1.17
Compact Wall Mounted (Comfort Model)	AS*E07LACF	230 ~	50	0.18	Note	0.013	0.15
	AS*E09LACF			0.18		0.013	0.15
	AS*E12LACF			0.22		0.017	0.18
	AS*E14LACF			0.24		0.019	0.20
Wall Mounted	AS*A18LATF	230 ~	50	0.22	Note	0.038	0.18
	AS*A24LATF			0.29		0.050	0.24
	AS*A30LATF			0.34		0.060	0.28
Ceiling Wall	AW*A07LATF	230 ~	50	0.10	Note	0.016	0.08
	AW*A09LATF			0.11		0.019	0.09
	AW*A12LATF			0.12		0.020	0.10
	AW*A14LATF			0.12		0.021	0.10
	AW*A18LATF			0.17		0.030	0.14
	AW*A24LATF			0.23		0.040	0.19
	AW*A30LATF			0.29		0.050	0.24

MCA : Min Circuit Amp = Max Operating Current (Full Load).

MFA : Main Fuse (Circuit breaker) Current; MFA $\leqq$ 2.25 x ΣMCA and MFA $\leqq$ 20 (A);
Select circuit sub breaker for indoor units by value MFA.

INDOOR UNIT

4-5. DIMENSIONS
4-5-1. COMPACT CASSETTE TYPE
■ MODELS : AUXB07, AUXB09, AUXB12, AUXB14, AUXB18

(Unit : mm)

INDOOR UNIT

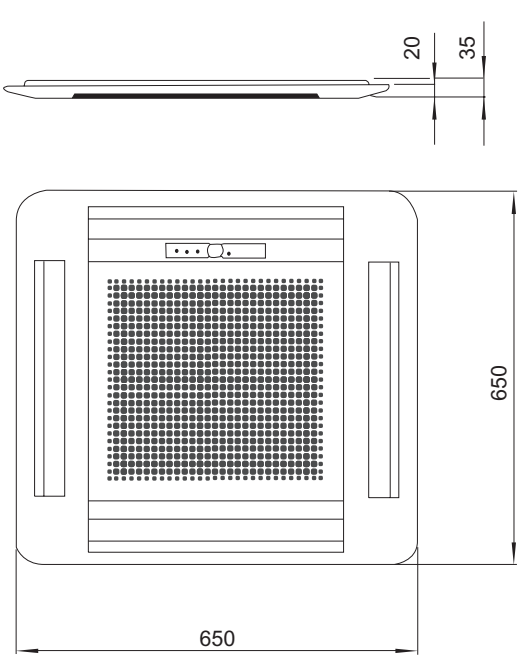

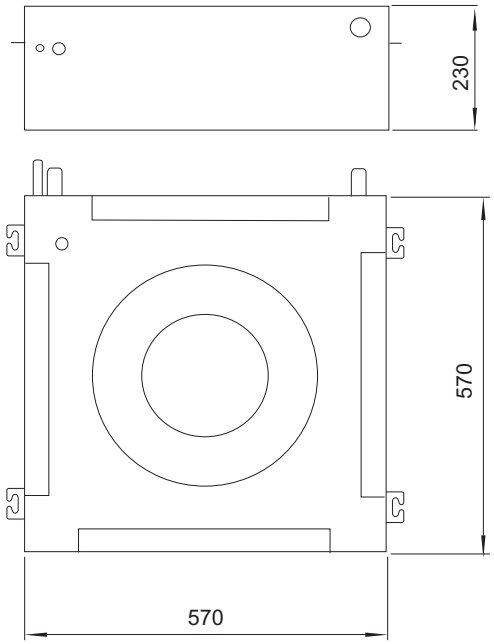

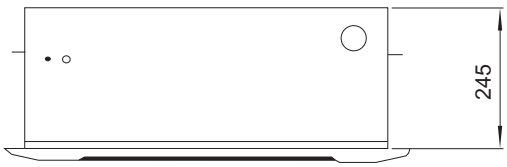

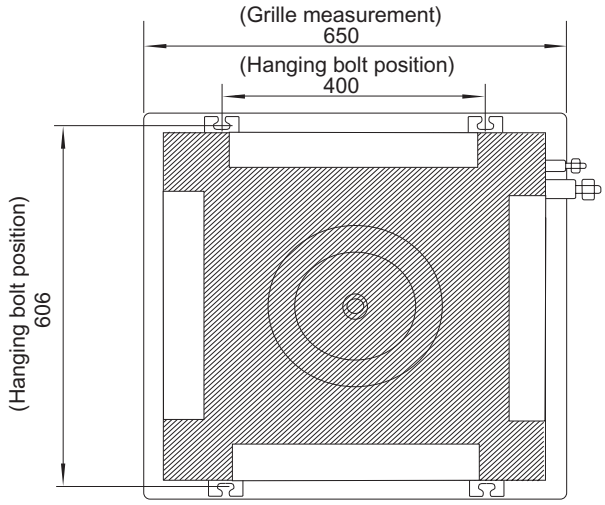

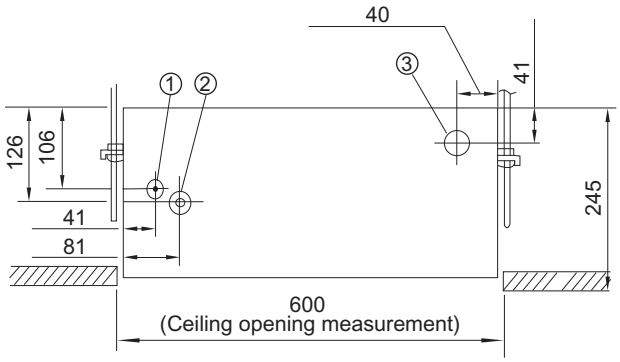

			AUXB07, AUXB09,AUXB12, AUXB14	AUXB18
①	Refrgerant pipe flare connection	Liquid	Ø 6.35mm	Ø 9.52mm
②		Gas	Ø 12.70mm	Ø 15.88mm
③	Drain pipe connection	Drain pipe	I.D. 32mm ; O.D. 37mm	

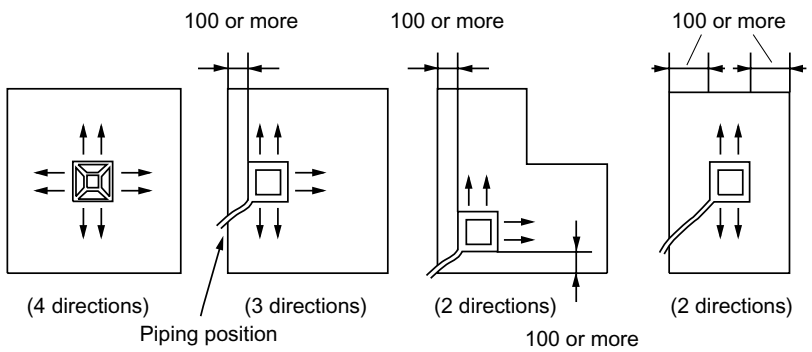

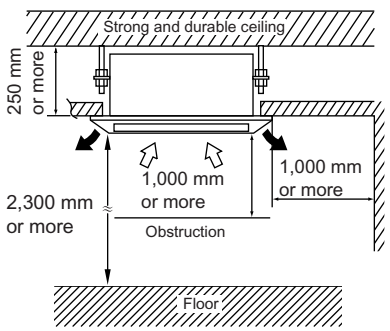

4-5-2. CASSETTE TYPE

■ MODELS : AU∗A20, AU∗A25, AU∗A30

(Unit : mm)

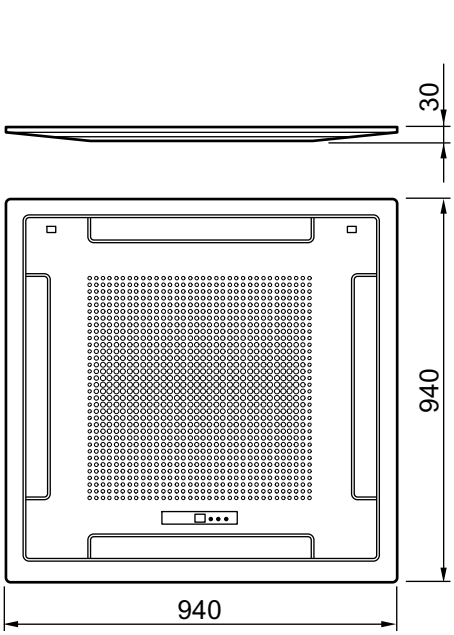

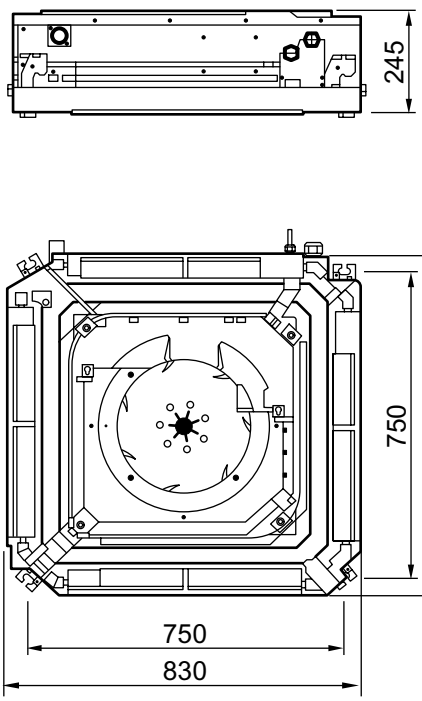

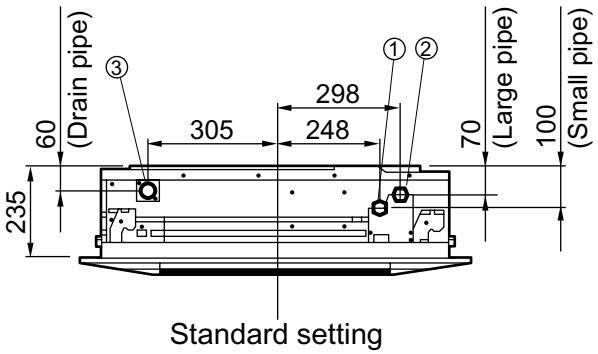

Standard setting

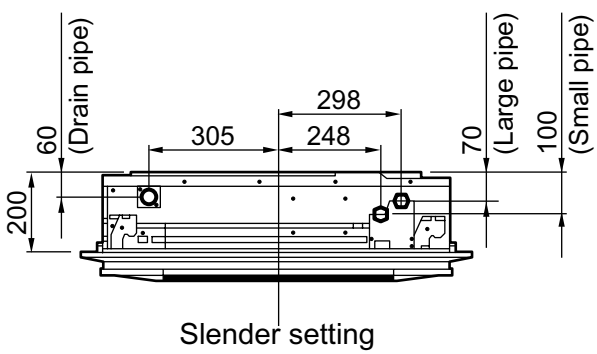

Slender setting

			AU∗A20, AU∗A25, AU∗A30
①	Refrgerant pipe flare connection	Liquid	Ø 9.52mm
②		Gas	Ø 15.88mm
③	Drain pipe connection	Drain pipe	I.D. 32mm ; O.D. 37mm

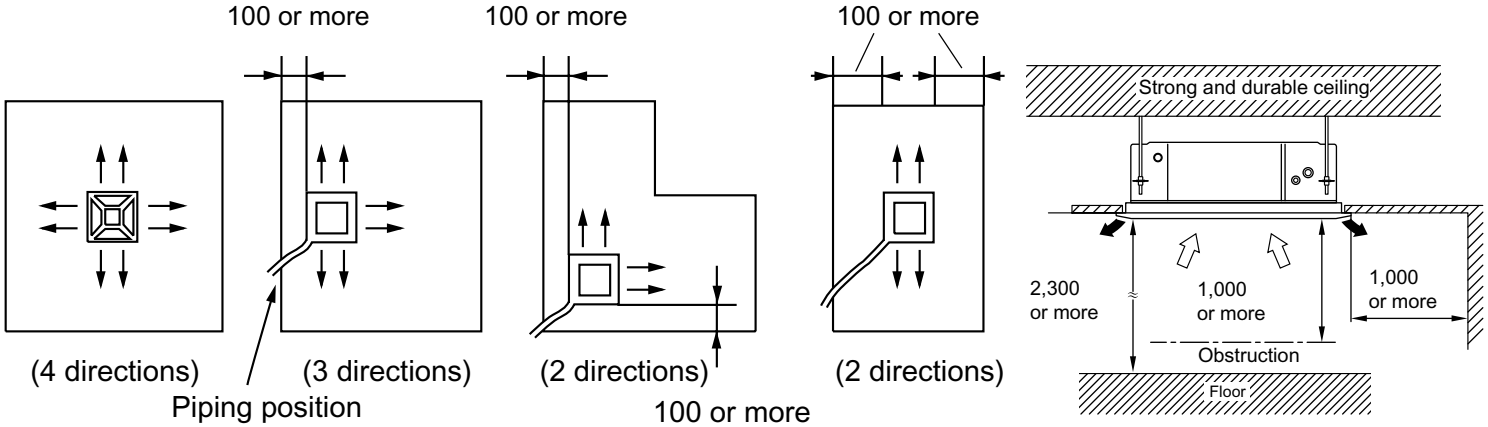

■ MODELS : AU∗A36, AU∗A45, AU∗A54

(Unit : mm)

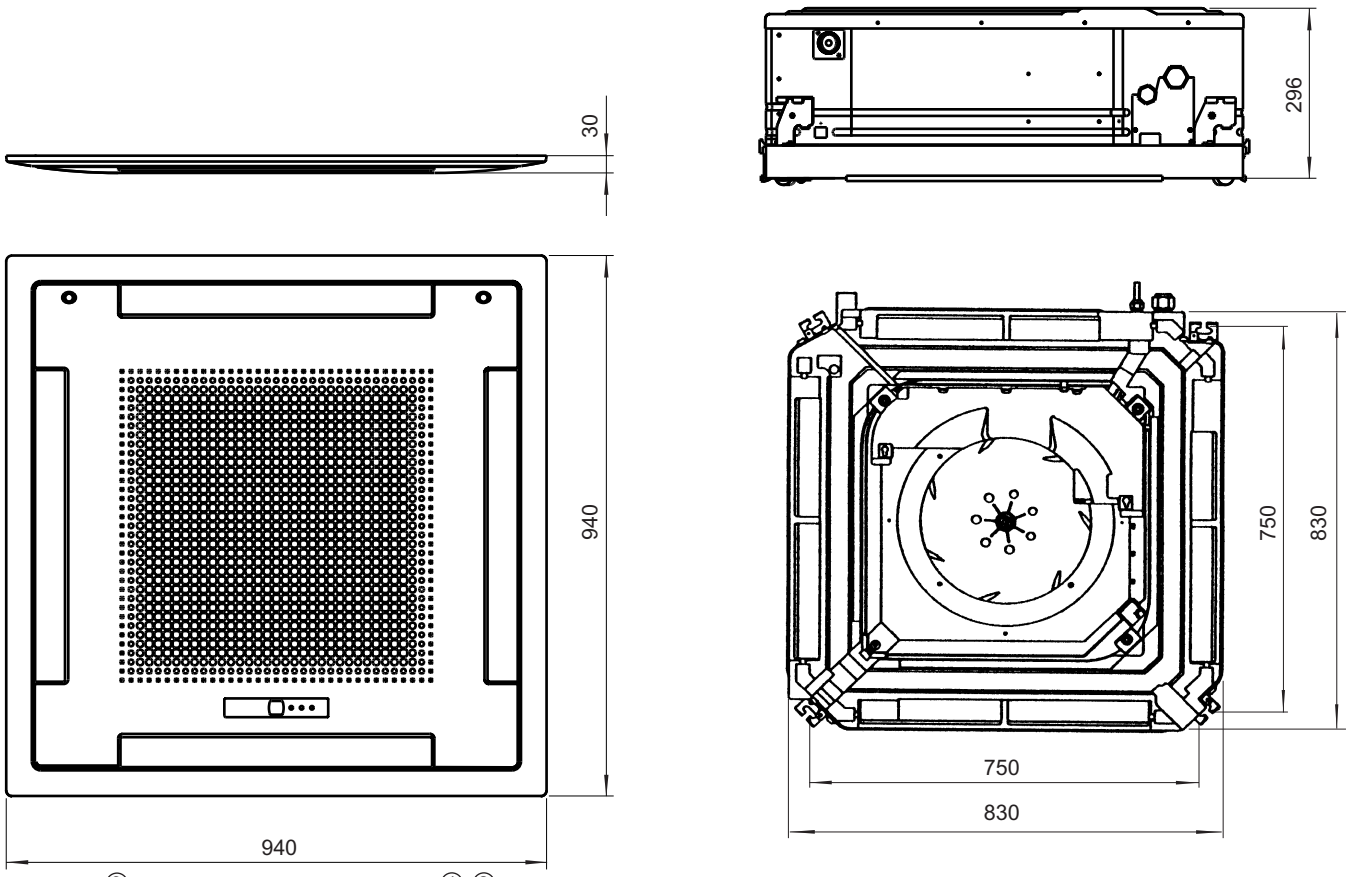

			AU∗A36, AU∗A45, AU∗A54
①	Refrgerant pipe flare connection	Liquid	Ø 9.52mm
②		Gas	Ø 19.05mm
③	Drain pipe connection	Drain pipe	I.D. 32mm ; O.D. 37mm

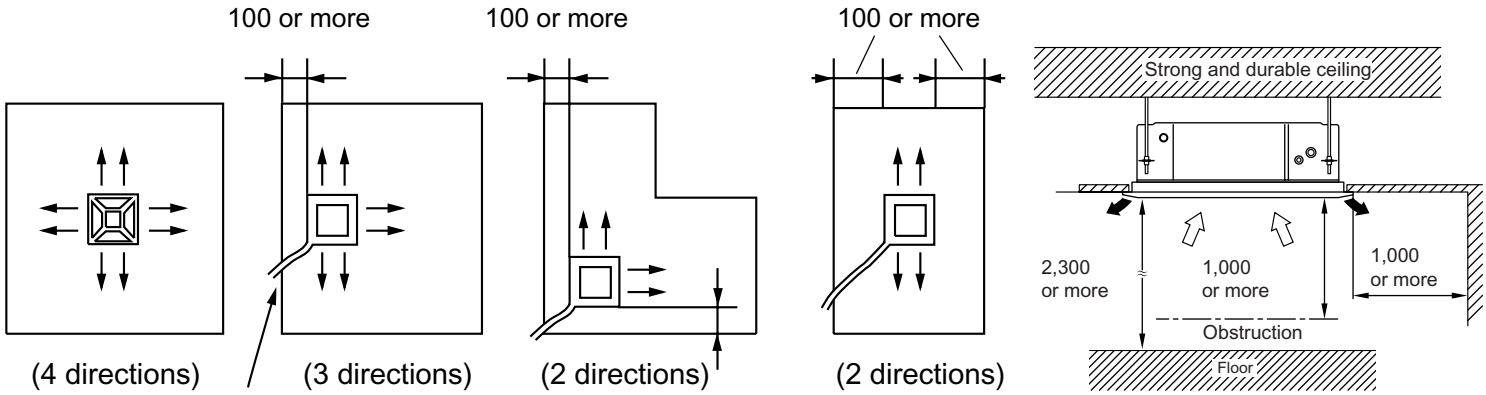

4-5-3. COMPACT DUCT TYPE

■ MODELS : ARXB07, ARXB09

(Unit : mm)

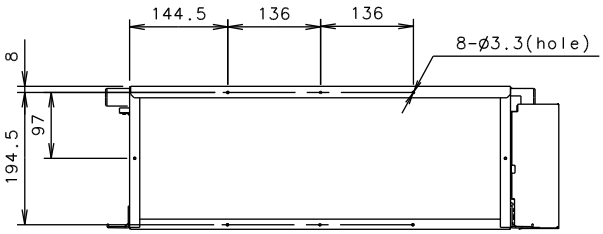

Rear view

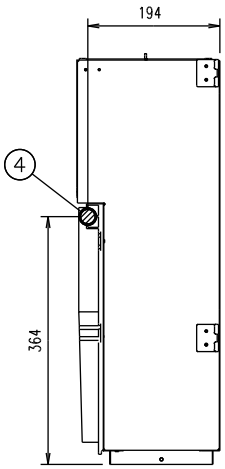

View A

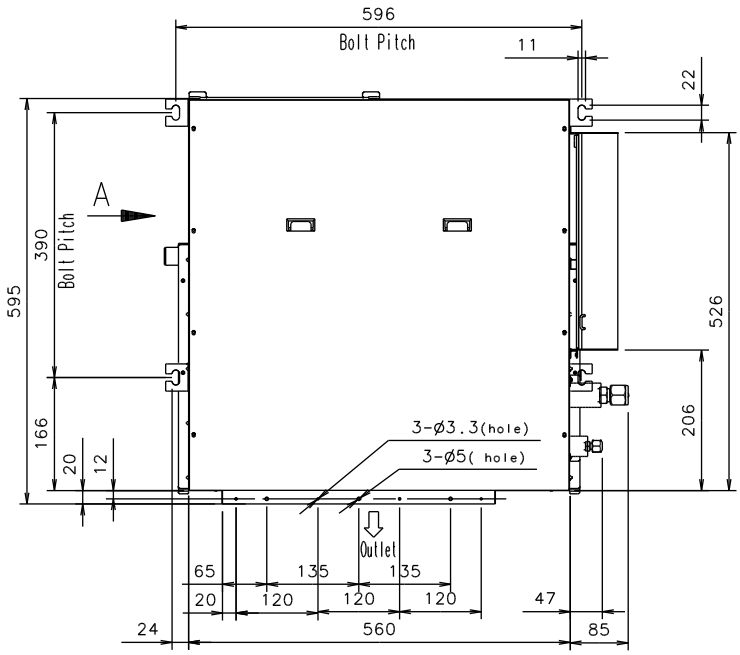

Top view

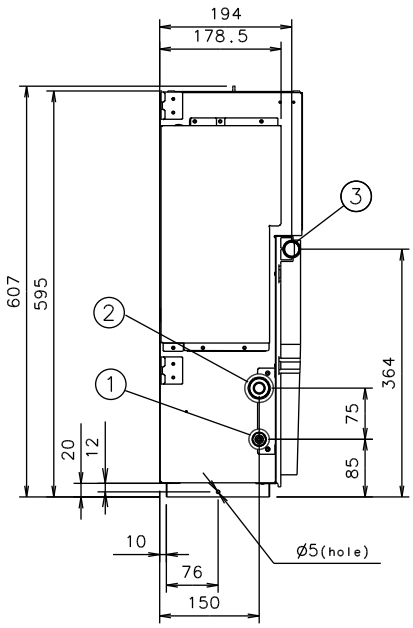

Side view

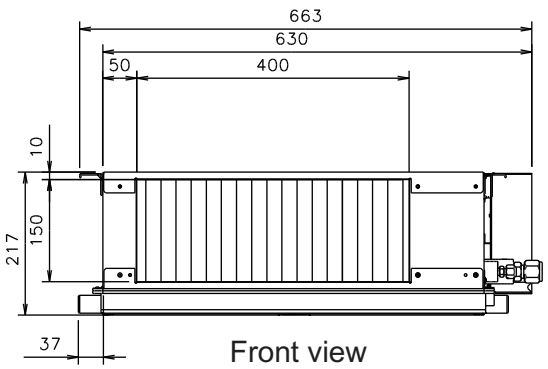

Front view

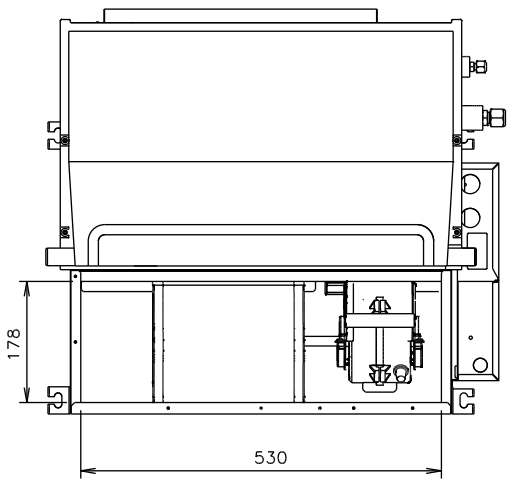

Bottom view

			ARXB07, ARXB09
①	Refrgerant pipe flare connection	Liquid	Ø 6.35mm
②		Gas	Ø 12.70mm
③ ④	Drain pipe connection	Drain pipe	I.D. 21.5mm ; O.D. 26mm

■BIRD'S-EYE VIEW

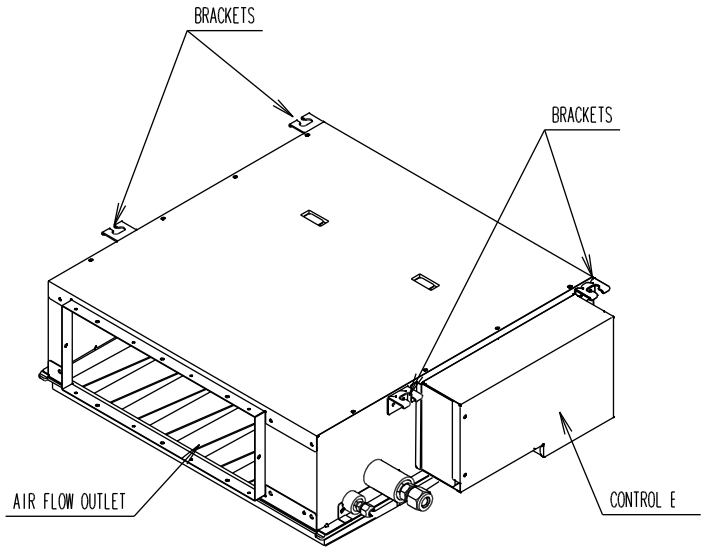

■MAINTENANCE HOLE *1

Provide a service hole for inspection purposes as shown below.
Do not place any wiring or illumination in the service space,
as they will impede service.

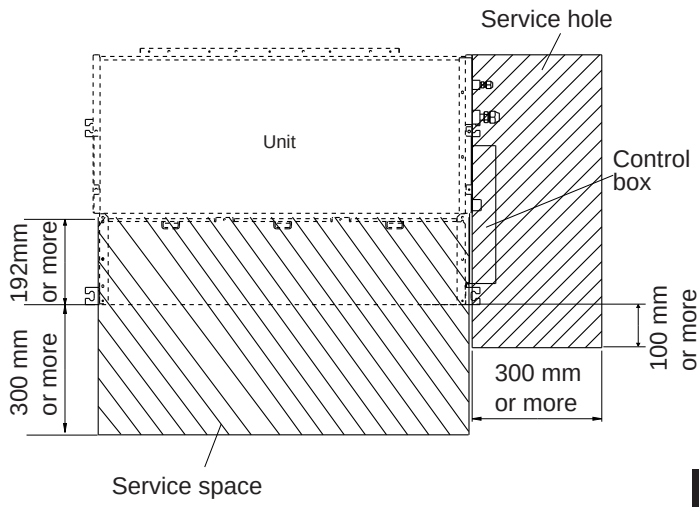

INDOOR UNIT

■MOUNTING POSITION *1

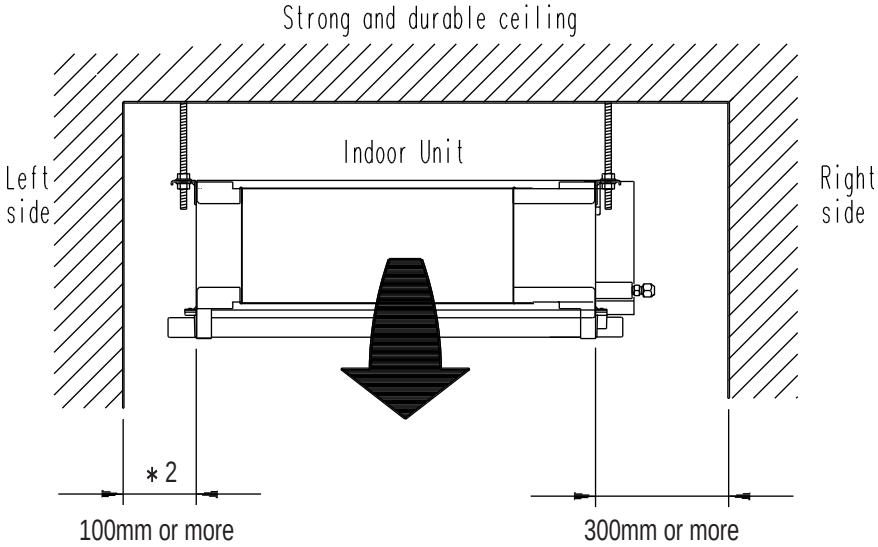

*1 When drain pump is used, leave the space required for service and maintenance (Refer to 6-8-3. DRAIN PUMP UNIT)

*2 When drain hose is connected, the required dimension is 150mm or more.

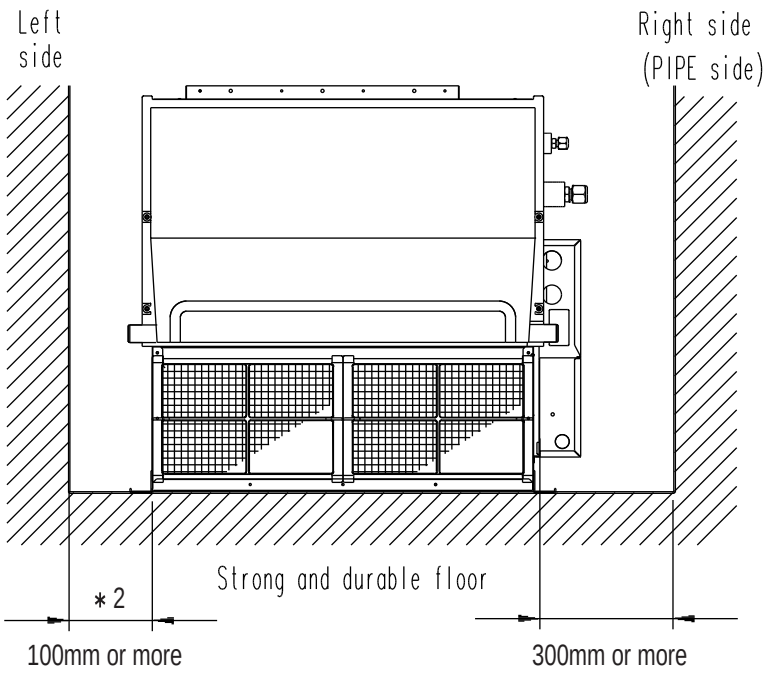

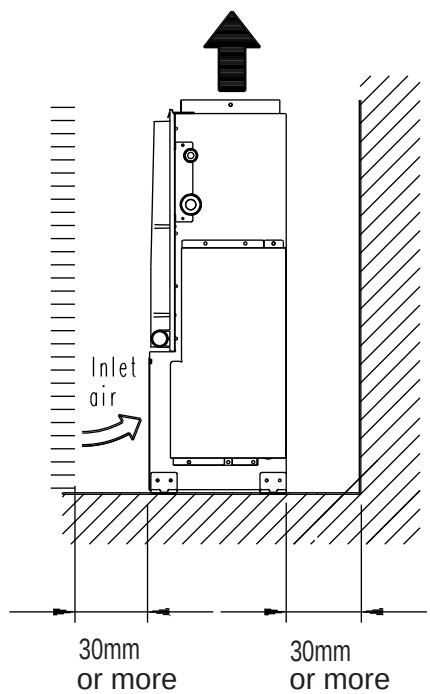

■ MODELS : ARXB12, ARXB14, ARXB18

(Unit : mm)

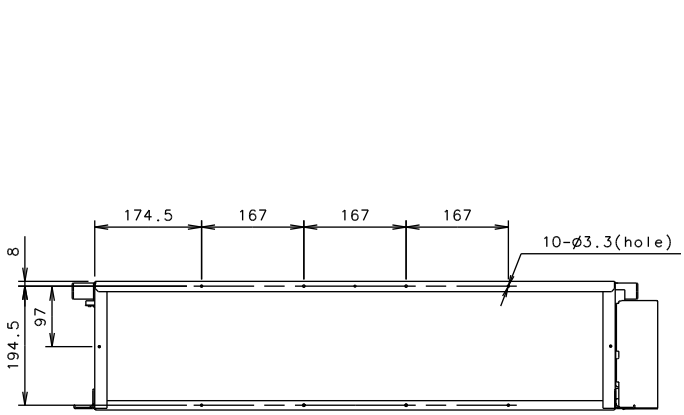

Rear view

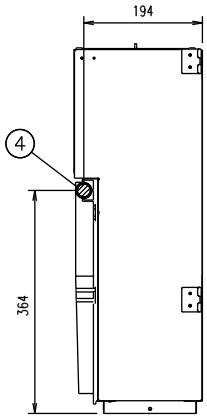

View A

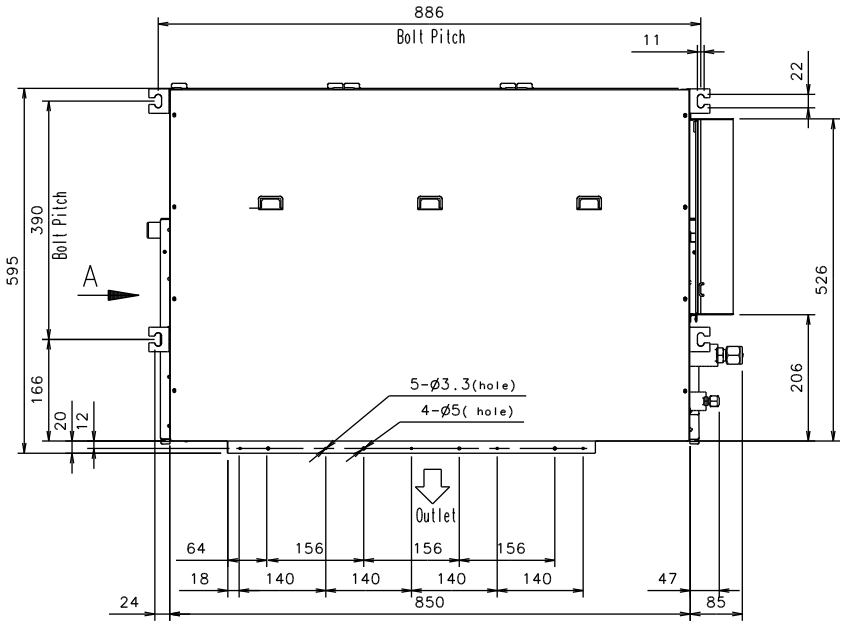

Top view

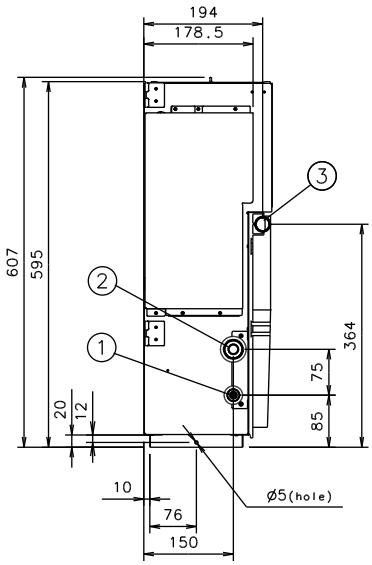

Side view

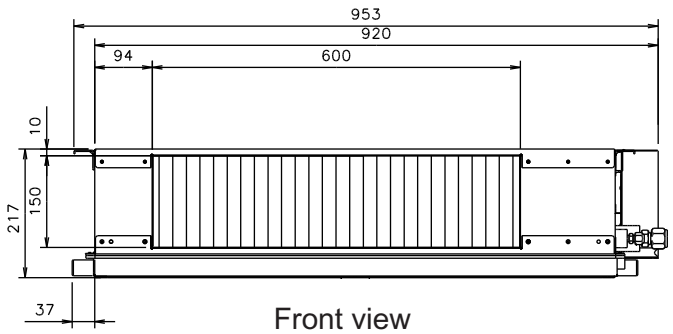

Front view

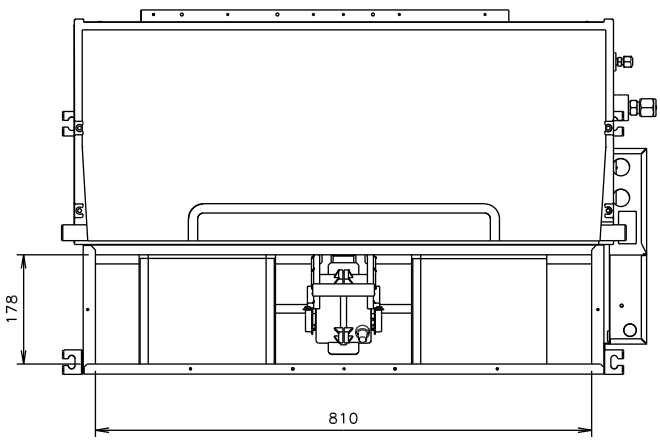

Bottom view

			ARXB12, ARXB14	ARXB18
①	Refrgerant pipe flare connection	Liquid	Ø 6.35mm	Ø 9.52mm
②		Gas	Ø 12.70mm	Ø 15.88mm
③ ④	Drain pipe connection	Drain pipe	I.D. 21.5mm ; O.D. 26mm	

■ BIRD'S-EYE VIEW

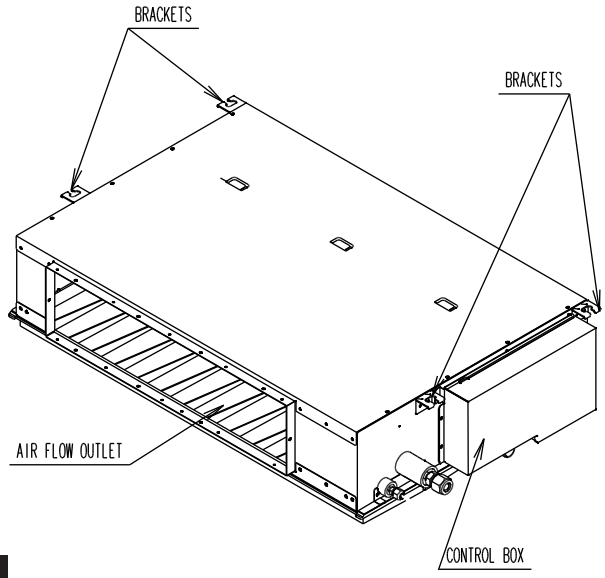

■ MAINTENANCE HOLE *1

Provide a service hole for inspection purposes as shown below.
Do not place any wiring or illumination in the service space,
as they will impede service.

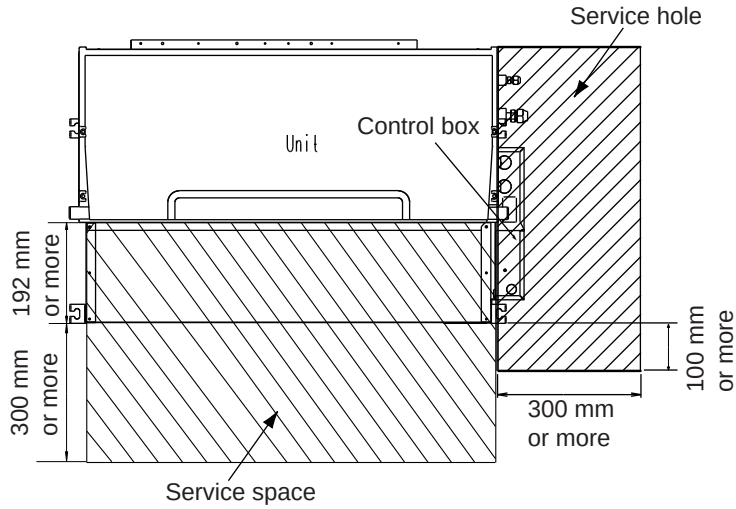

■ MOUNTING POSITION *1

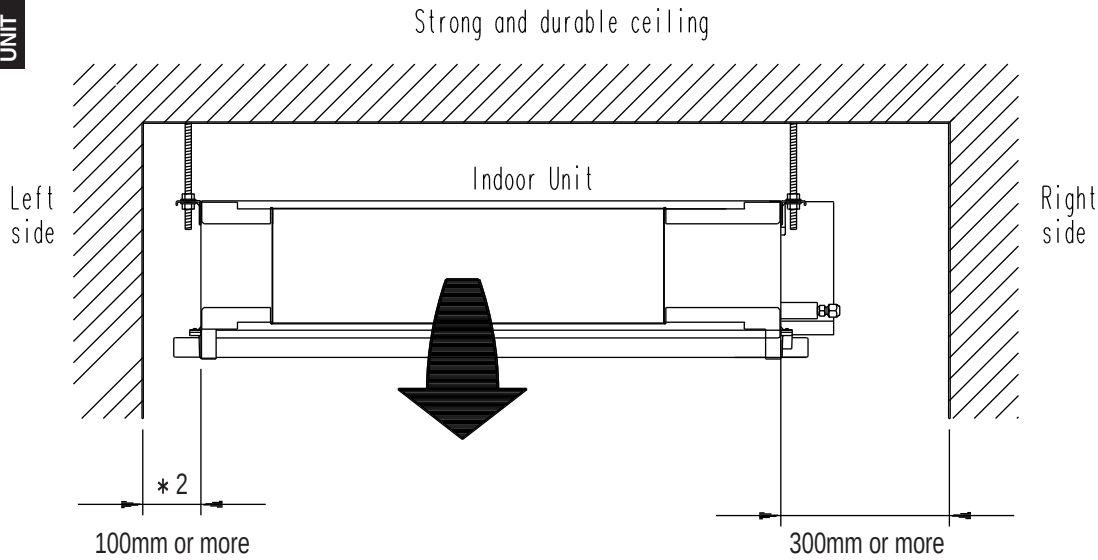

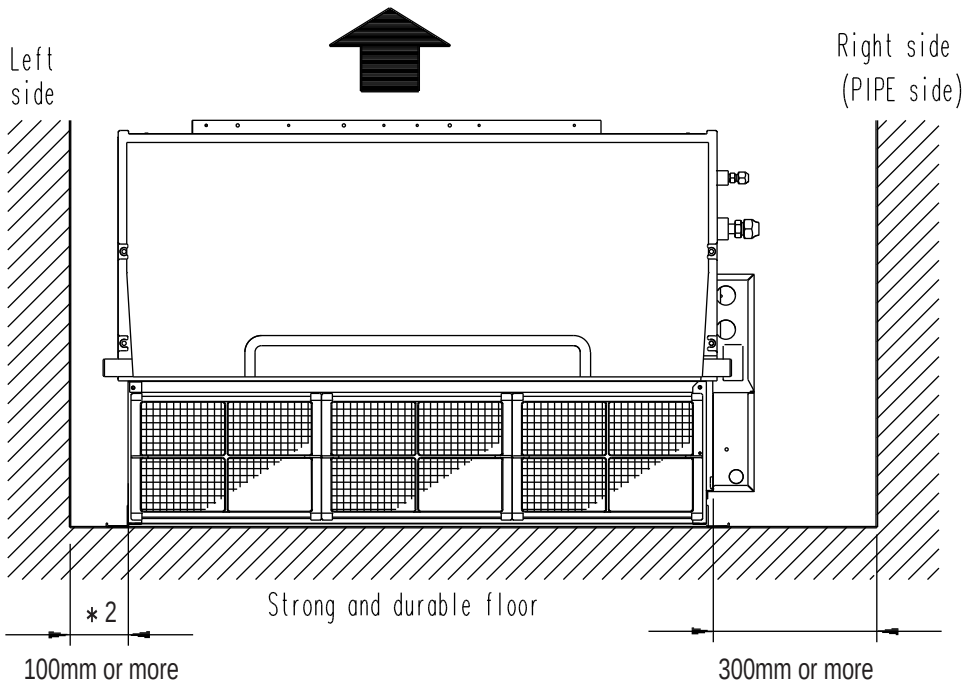

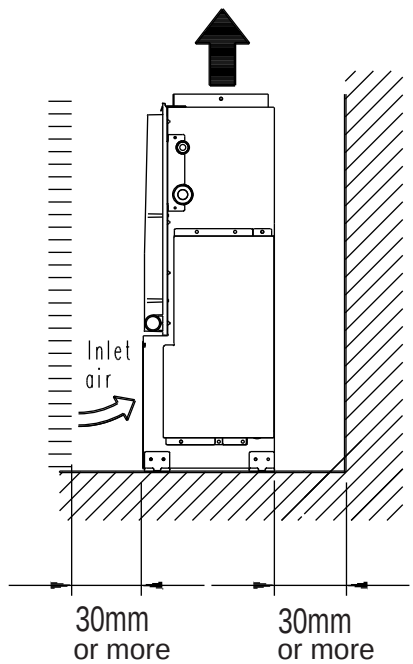

*1 When drain pump is used, leave the space required for service and maintenance (Refer to 6-8-3. DRAIN PUMP UNIT)

*2 When drain hose is connected, the required dimension is 150mm or more.

4-5-4. LOW STATIC PRESSURE DUCT TYPE

■ MODELS: ARXB25, ARXB30, ARXB36, ARXB45

4-5-5. DUCT TYPE

■ MODELS: ARXA25, ARXA30, ARXA36, ARXA45

[Unit : mm]

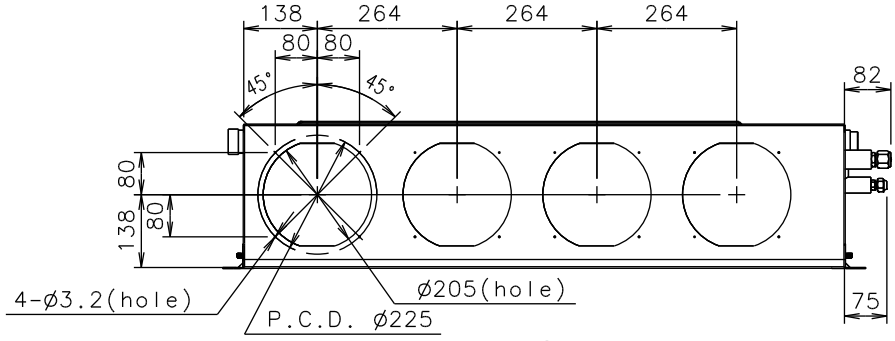

Front view

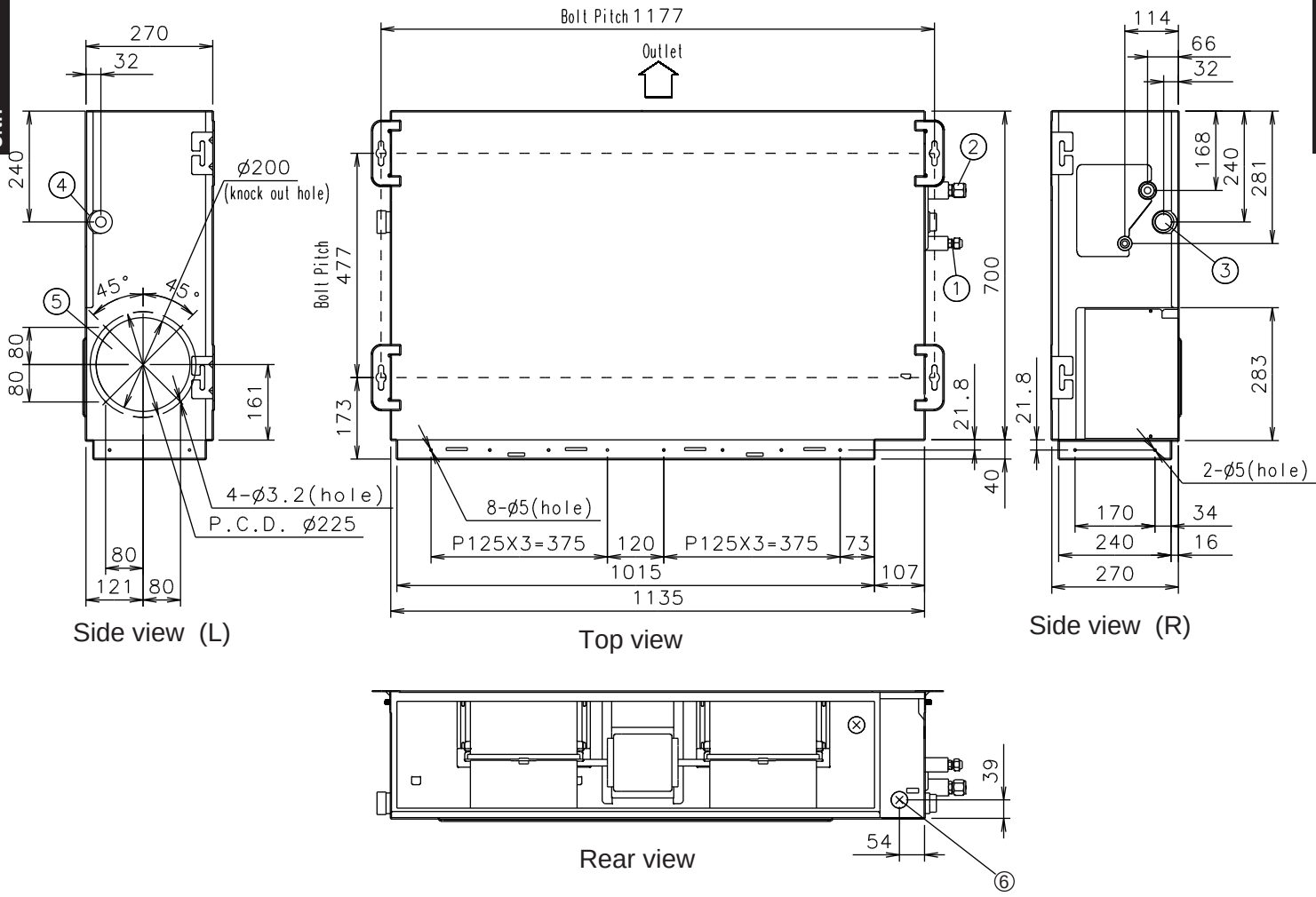

Side view (L)

Top view

Side view (R)

Rear view

			ARXB25, ARXB30 ARXA25, ARXA30	ARXB36, ARXB45 ARXA36, ARXA45
①	Refrgerant pipe flare connection	Liquid	Ø 9.52mm	Ø 9.52mm
②		Gas	Ø 15.88mm	Ø 19.05mm
③	Drain pipe connection	Drain pipe	I.D. 36mm ; O.D. 38mm	
④		Drain cap		
⑤	Knock out hole (fresh air)	-	200mm	
⑥	Hole for power cable	-	23mm	

■ MAINTENANCE HOLE *1

[Unit : mm]

It shall be possible to install and remove the control box.

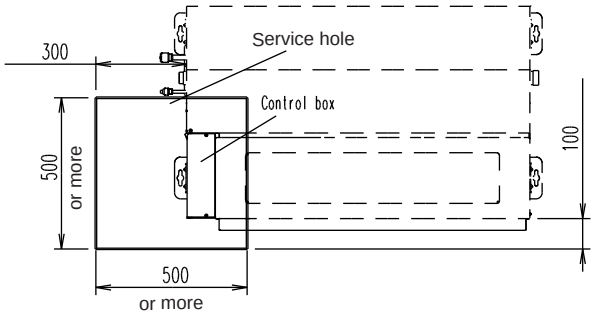

It shall be possible to install and remove the control box,fan units and filter.

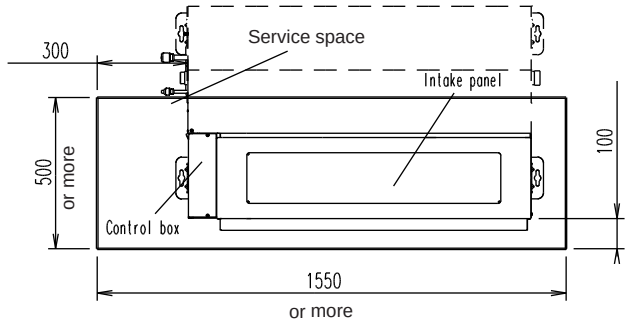

■ MOUNTING POSITION *1

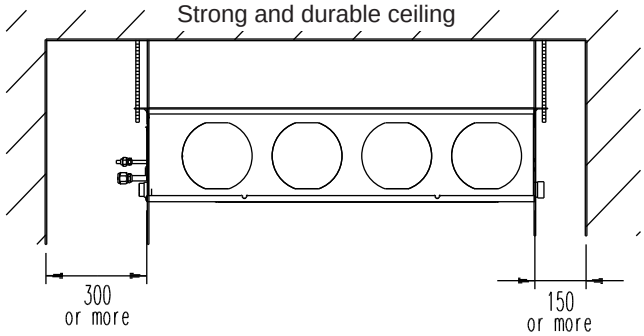

*1 When drain pump is used, leave the space required for service and maintenance (Refer to 6-8-3. DRAIN PUMP UNIT)

■ WHEN USING A SQUARE DUCT

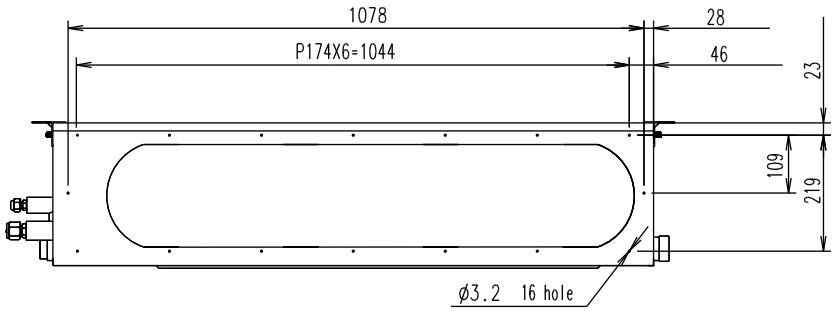

INDOOR UNIT

4-5-6. HIGH STATIC PRESSURE DUCT TYPE

■ MODELS: ARXC36, ARXC45, ARXC60

[Unit : mm]

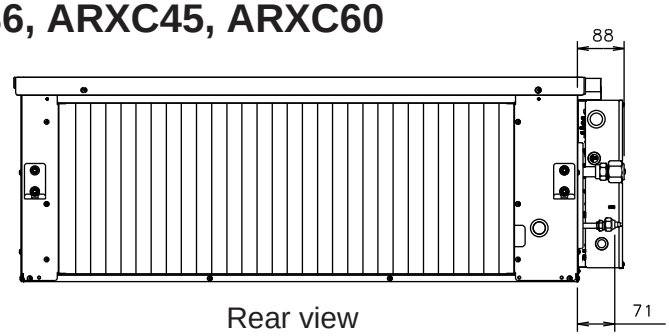

Rear view

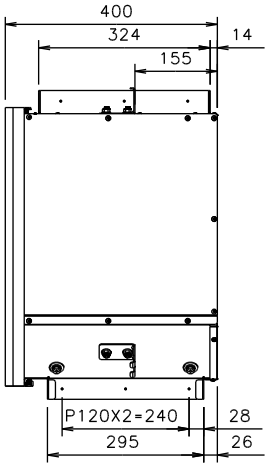

Side view (L)

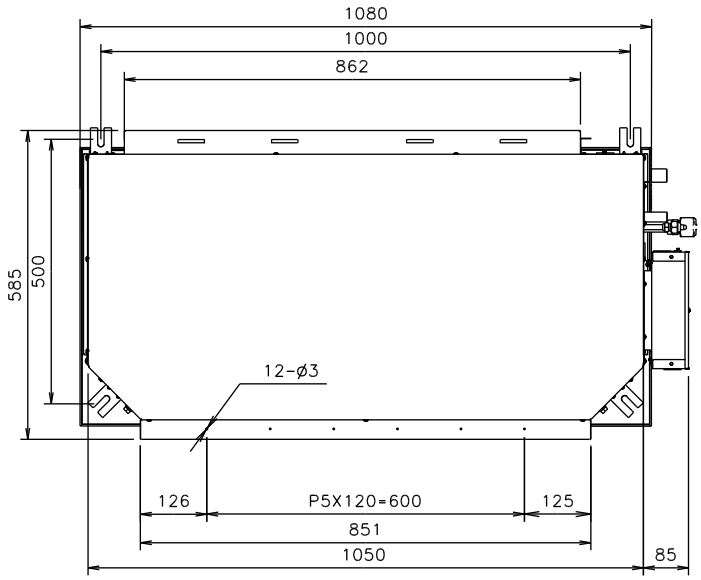

Top view

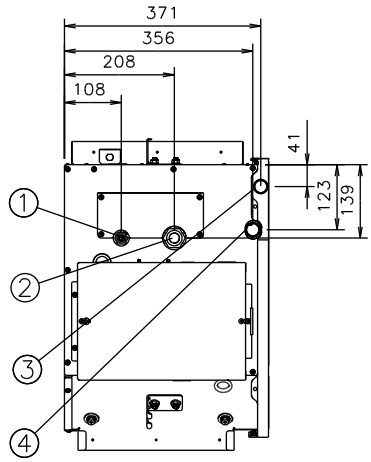

Side view (R)

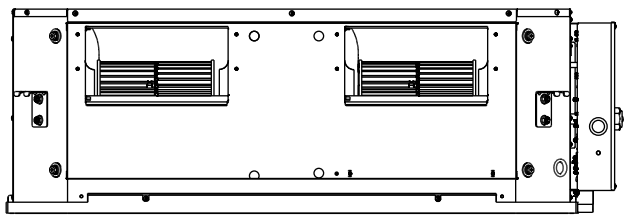

Front view

			ARXC36, ARXC45, ARXC60
①	Refrgerant pipe flare connection	Liquid	Ø 9.52mm
②		Gas	Ø 19.05mm
③ ④	Drain pipe connection	Drain pipe	I.D. 23.4mm ; O.D. 25.4mm

■ MAINTENANCE HOLE

Provide a service hole for inspection purposes as shown below.
Do not place any wiring or illumination in the service space,
as they will impede service.

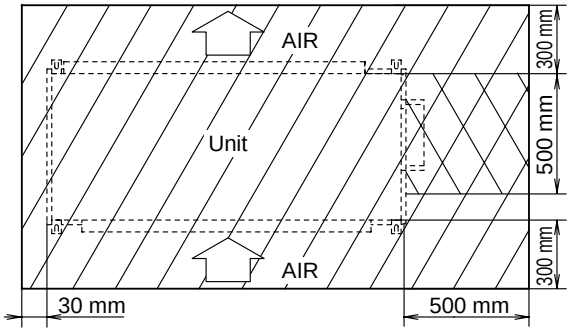

▨ : Service hole ▨ : Service space

■ MOUNTING POSITION

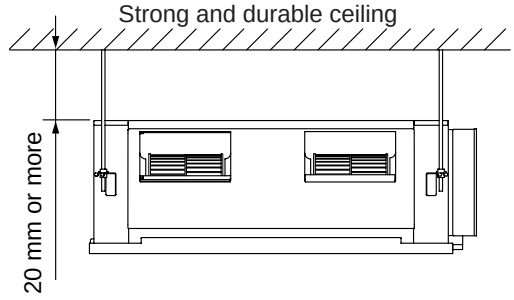

INDOOR UNIT

■ MODEL: ARXC90

[Unit : mm]

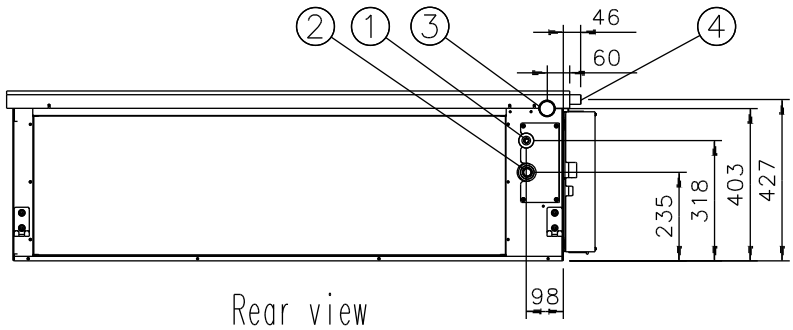

Rear view

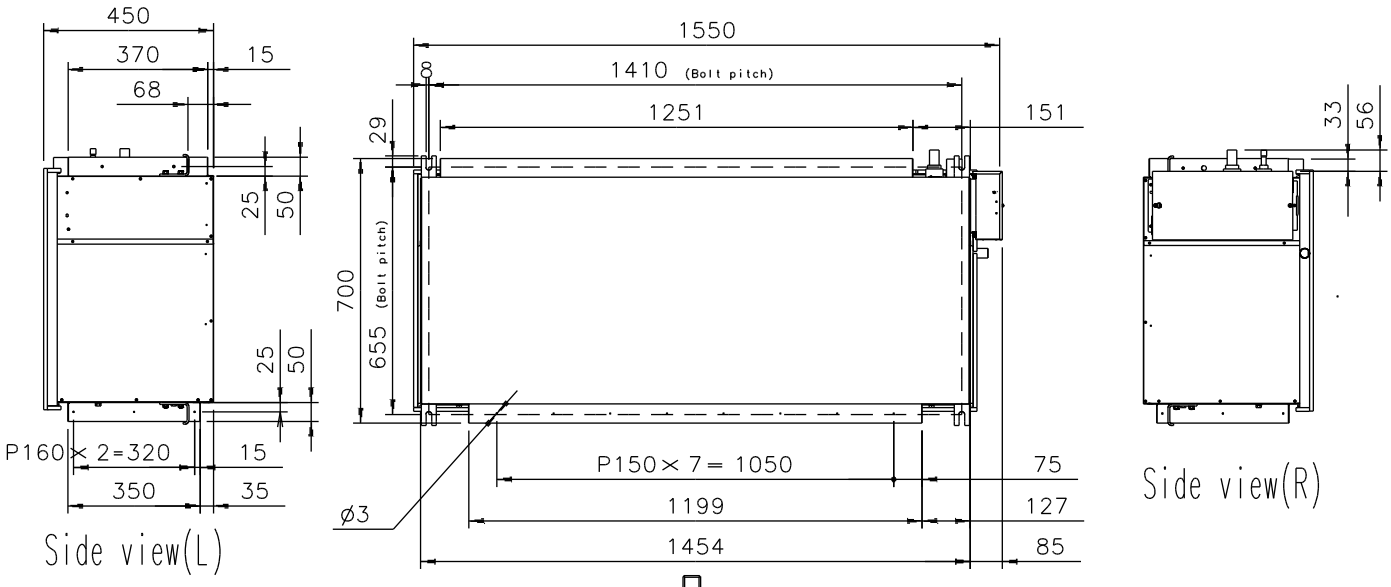

Side view(L)

Side view(R)

AIR FLOW

Top view

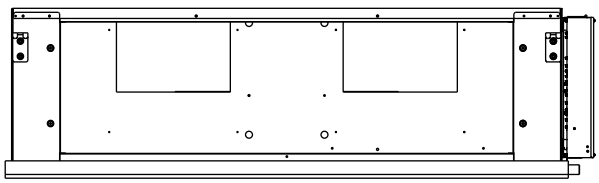

Front view

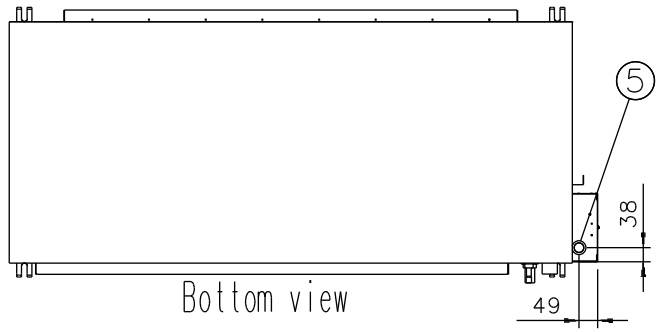

Bottom view

			ARXC90
①	Refrgerant pipe flare connection	Liquid	Ø 12.70mm
②		Gas	Ø 22.22mm
③	Drain pipe connection	Drain pipe	I.D. 38.1mm ; O.D. 40.5mm
④			I.D. 23.4mm ; O.D. 25.4mm
⑤	Hole for power cable	-	25mm

■ MAINTENANCE HOLE

Provide a service hole for inspection purposes as shown below.
Do not place any wiring or illumination in the service space, as they will impede service.

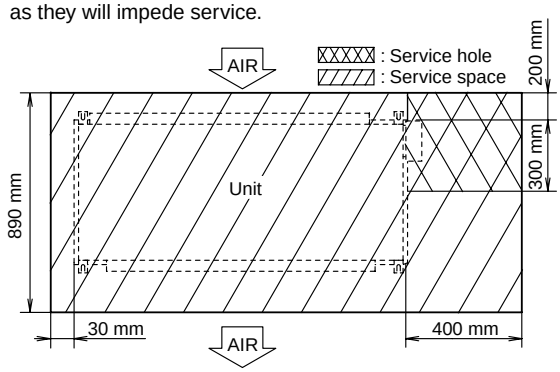

■ MOUNTING POSITION

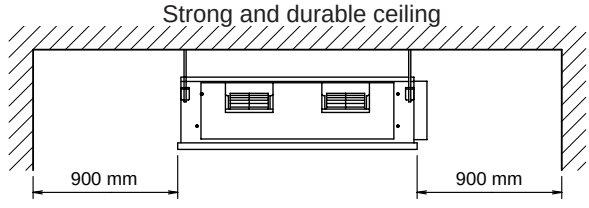

If the service space shown in the left is unavailable, provide a 900 mm service space at either the left or right side of the unit.

4-5-7. FLOOR / CELING TYPE

■ MODELS : AB∗A12, AB∗A14, AB∗A18, AB∗A24

(Unit : mm)

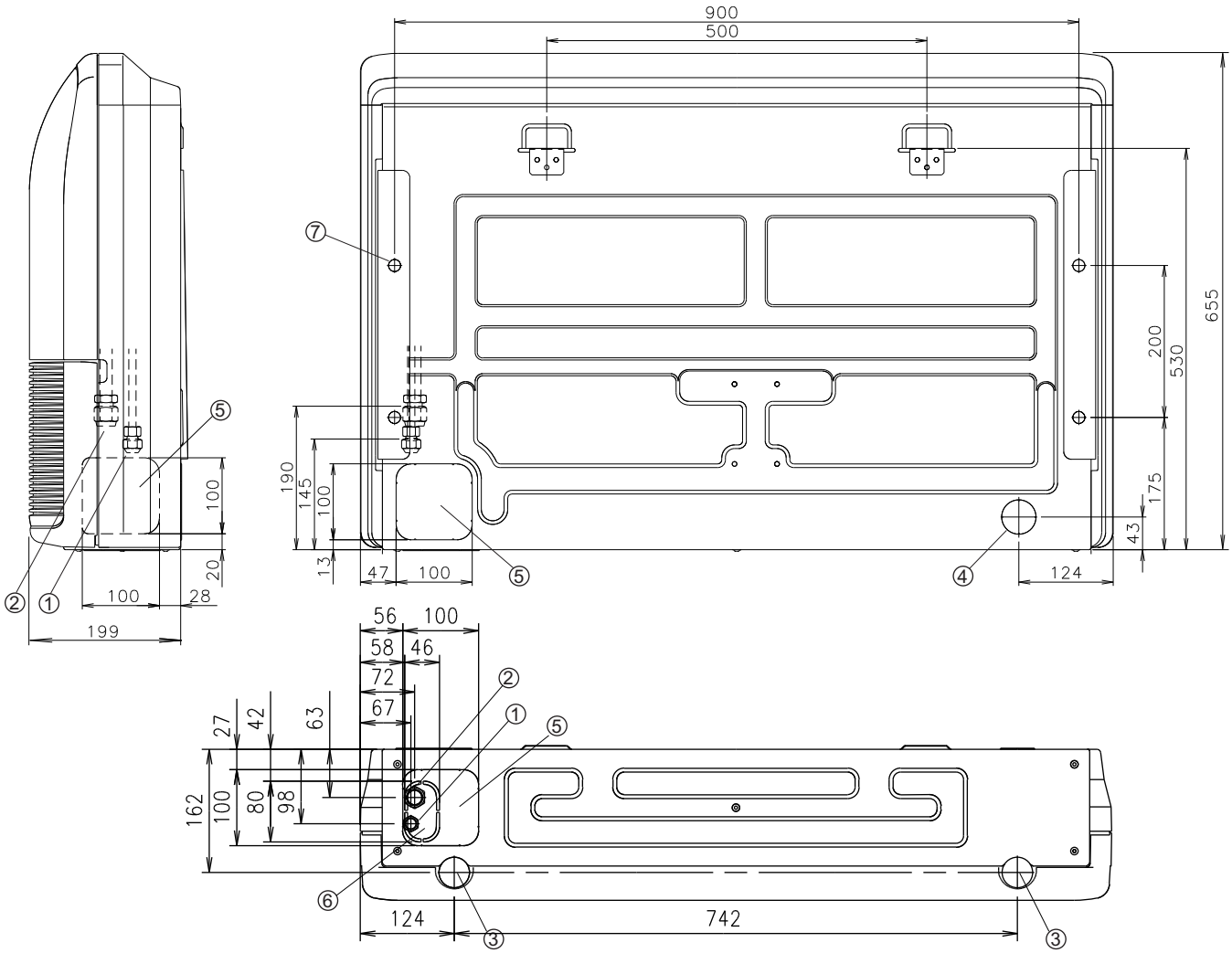

			AB∗A12, AB∗A14	AB∗A18, AB∗A24
①	Refrgerant pipe flare connection	Liquid	Ø 6.35mm	Ø6.35(Ø9.52)mm ∗1
②		Gas	Ø 12.70mm	Ø 15.88mm
③	Drain pipe connection	Drain pipe	I.D. 22mm ; O.D. 25.6mm	
		Drain hose	I.D. 25mm ; O.D. 29mm ; L=700mm	
④	Knock out hole	Drain pipe	Ø 45mm	
⑤ ⑥		Refrigerant pipe	-	
⑦	Hole for lifting bolt	-	Use M10 screw bolt	

∗1 : Value in ( ) is the unit side flare size dimmension.
Connect by the adaptor (Accessory).

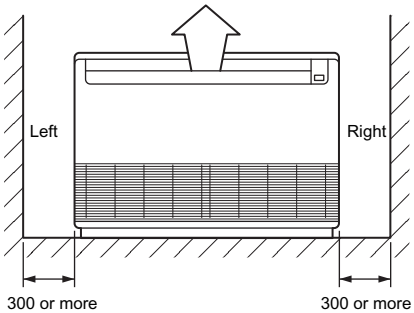

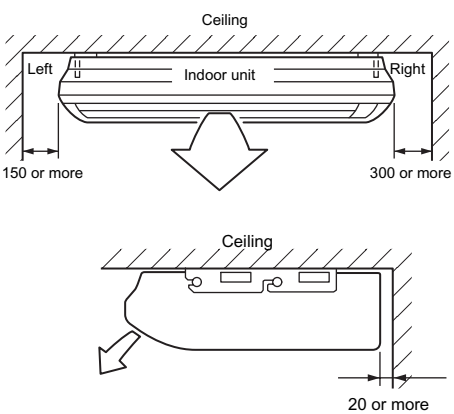

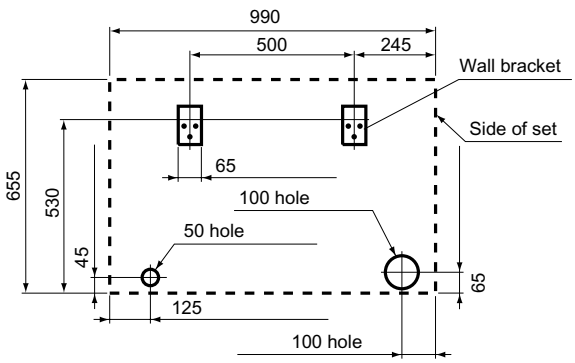

4-5-8. CEILING TYPE

■ MODELS : AB∗A30, AB∗A36, AB∗A45, AB∗A54

(Unit : mm)

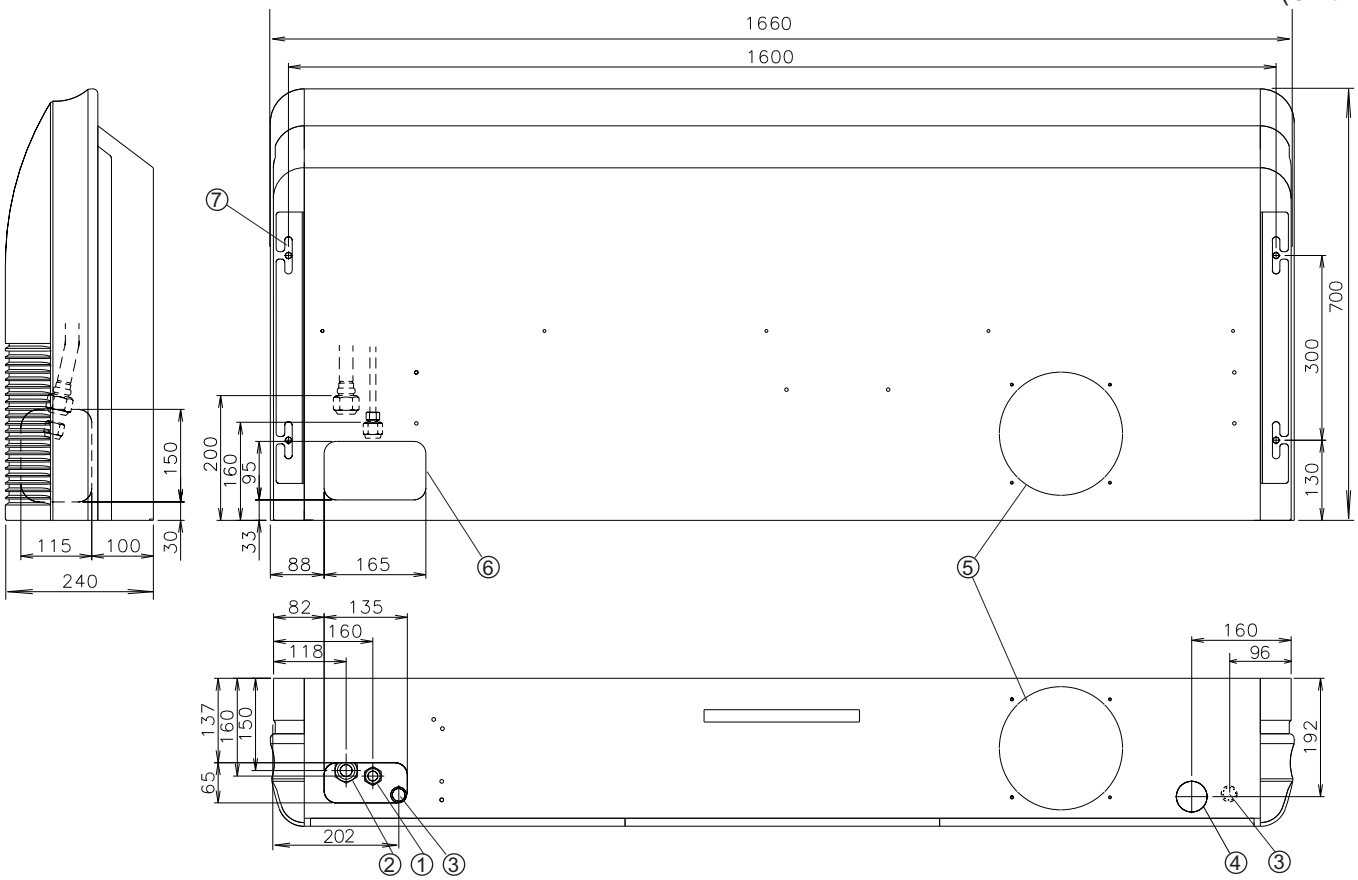

			AB∗A30	AB∗A36, AB∗A45, AB∗A54
①	Refrgerant pipe flare connection	Liquid	Ø 9.52mm	
②		Gas	Ø 15.88mm	Ø 19.05mm
③	Drain pipe connection	Drain pipe	I.D. 22mm ; O.D. 25.6mm	
④	Knock out hole	Drain	Ø 50mm	
⑤		Fresh air	Ø 200mm	
⑥		Refrigerant pipe	-	
⑦	Hole for lifting bolt	-	Use M10 screw bolt	

Ceiling

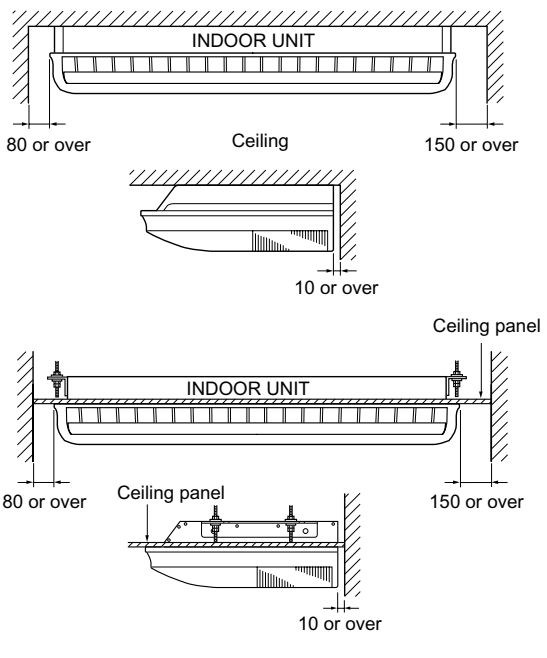

Suspension bolt pitch

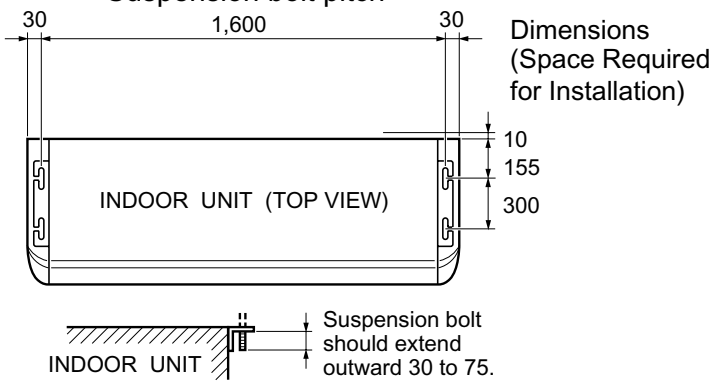

Dimensions (Space Required for Installation)

4-5-9. COMPACT WALL MOUNTED TYPE (Comfort model)

■ MODELS : AS∗E07, AS∗E09, AS∗E12, AS∗E14

(Unit : mm)

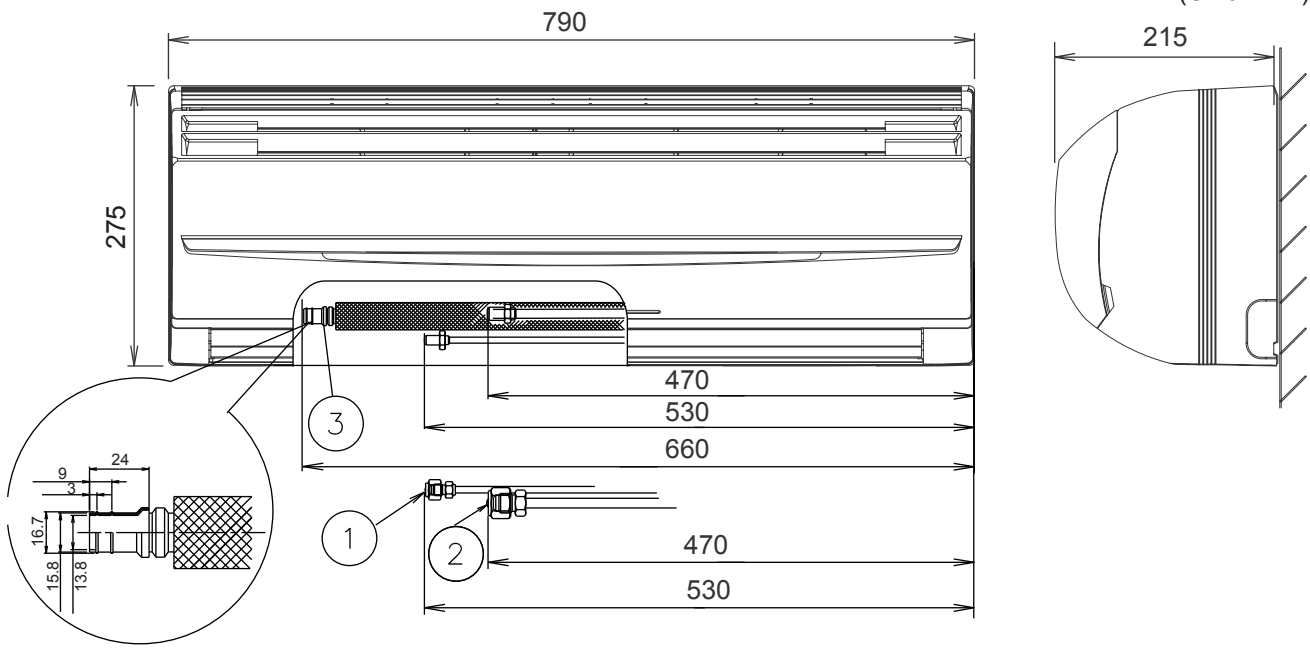

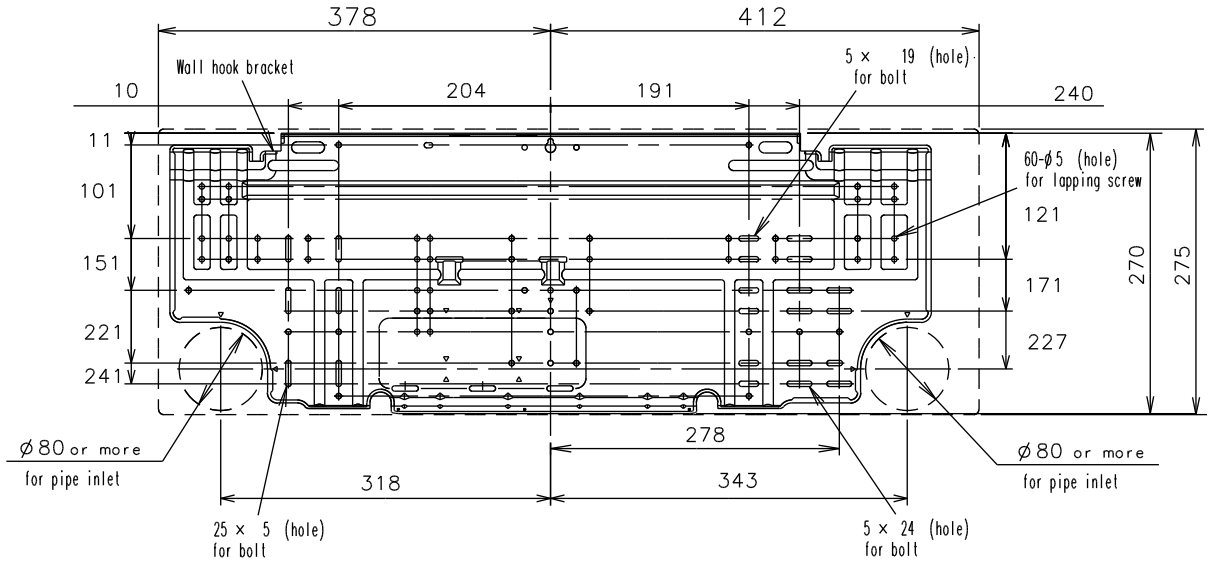

			AS∗E07, AS∗E09, AS∗E12, AS∗E14, AS∗E18
①	Refrigerant pipe flare connection	Liquid	Ø 6.35mm
②		Gas	Ø 12.70mm
③	Drain pipe connection	Drain pipe	Drain hose : L= 600mm ; I.D. 13.8mm ; O.D. 15.8 - 16.7mm

● MOUNTING POSITION

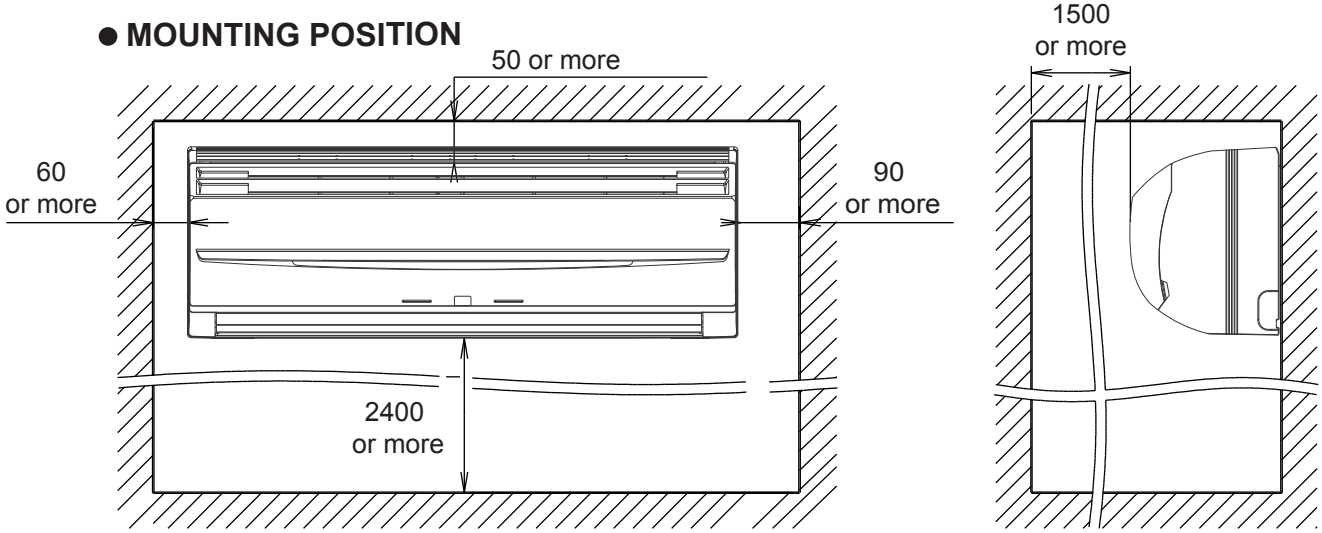

4-5-10. WALL MOUNTED TYPE

■MODELS : AS∗A18, AS∗A24, AS∗A30

(Unit : mm)

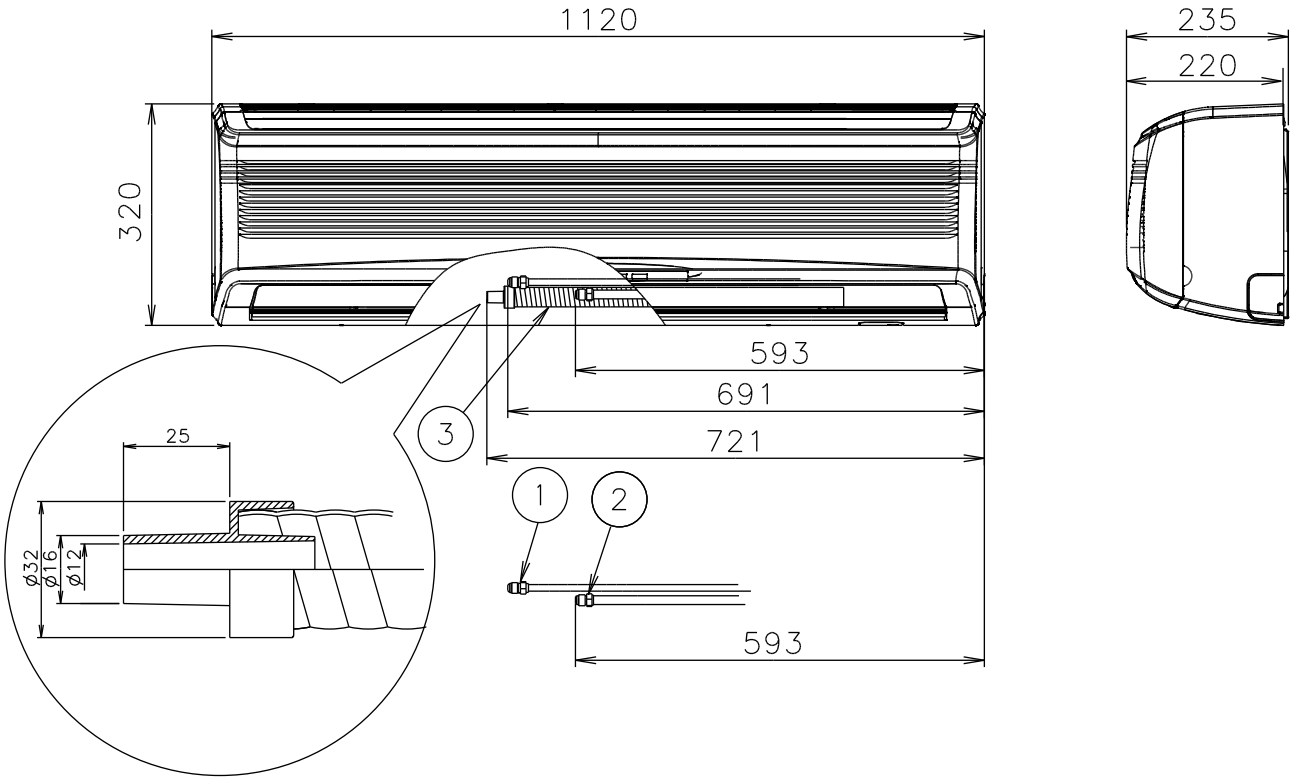

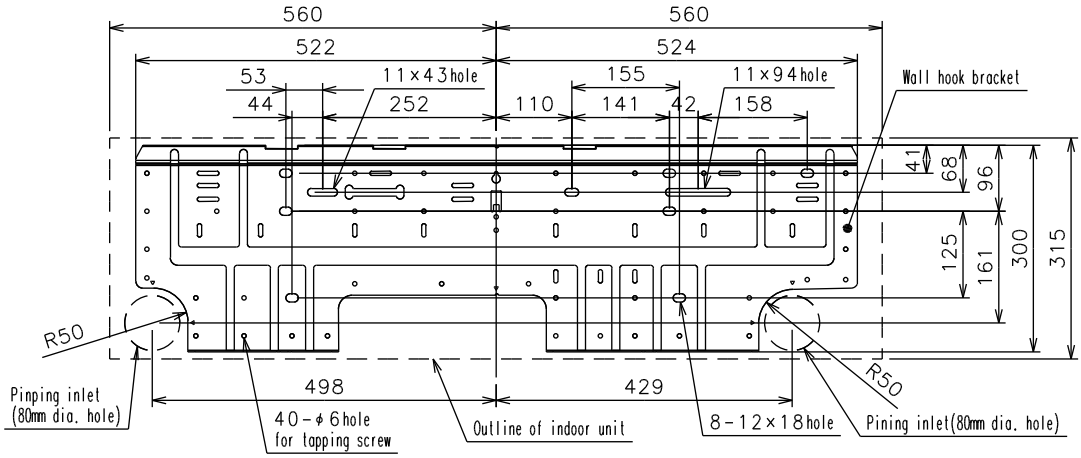

			AS∗A18, AS∗A24, AS∗A30
①	Refrgerant pipe flare connection	Liquid	Ø 9.52mm
②		Gas	Ø 15.88mm
③	Drain pipe connection	Drain pipe	I.D. 12mm ; O.D. 16mm L=670mm

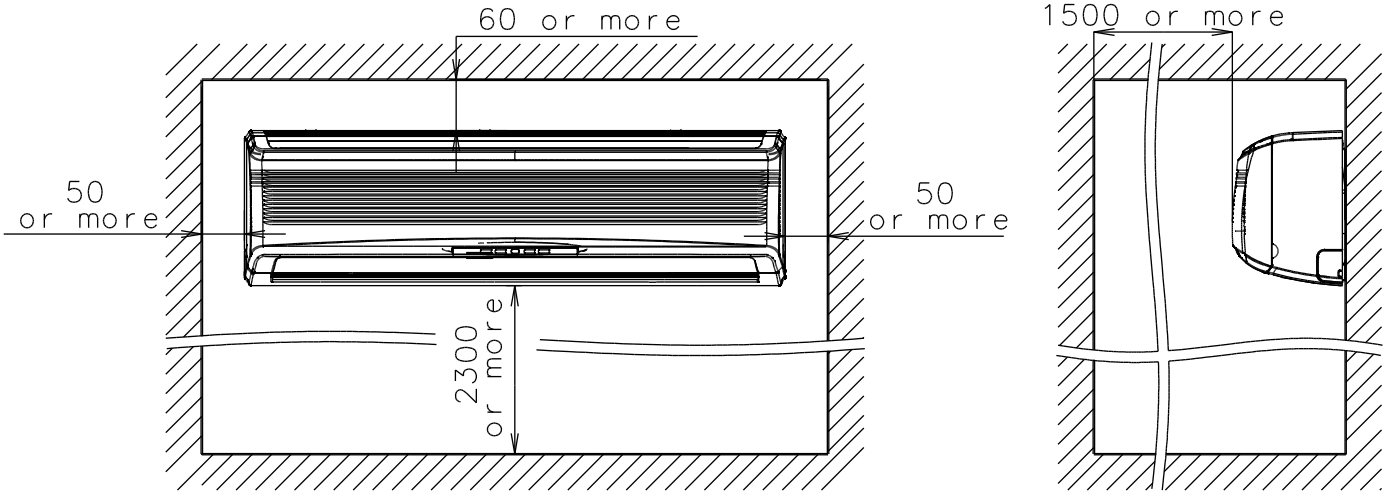

4-5-11. CEILING WALL TYPE

■MODELS : AW∗A07, AW∗A09, AW∗A12, AW∗A14 AW∗A18, AW∗A24, AW∗A30

(Unit : mm)

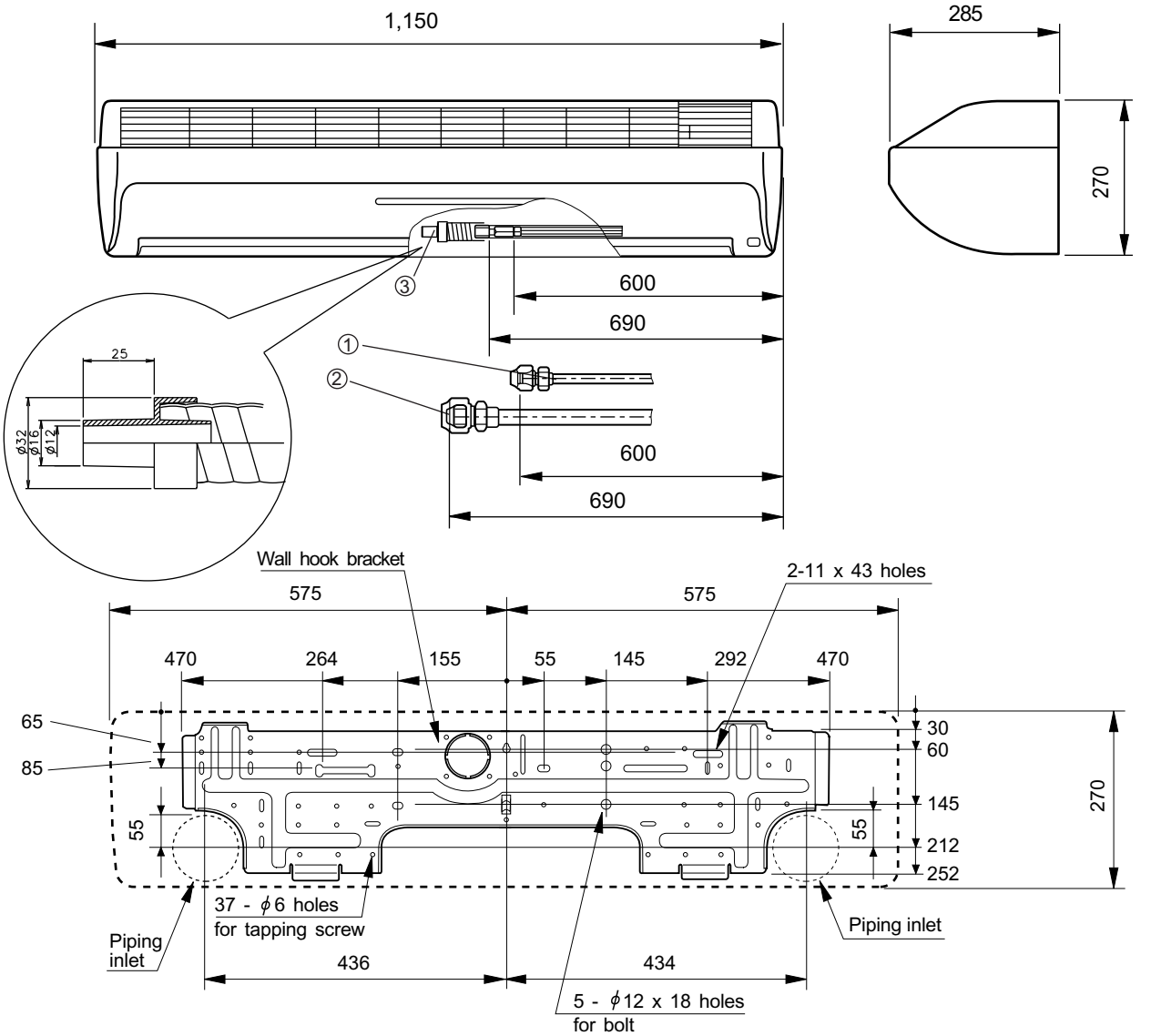

			AW∗A07, AW∗A09 AW∗A12, AW∗A14	AW∗A18, AW∗A24 AW∗A30
①	Refrgerant pipe flare connection	Liquid	Ø 6.35mm	Ø 9.52mm
②		Gas	Ø 12.70mm	Ø 15.88mm
③	Drain pipe connection	Drain pipe	I.D. 12mm ; O.D. 16mm L=670mm	

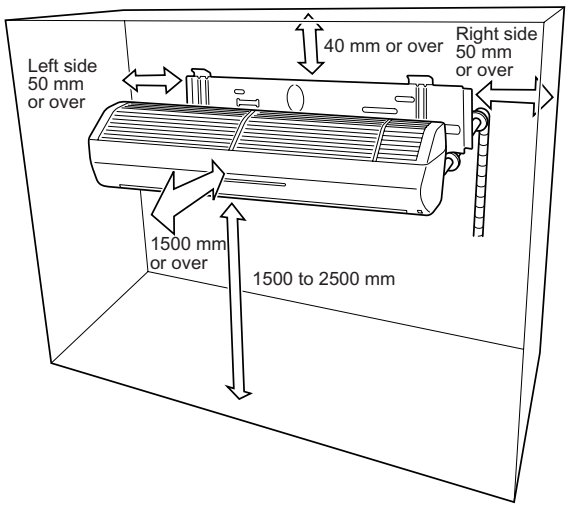

4-6. WIRING DIAGRAMS

4-6-1. COMPACT CASSETTE TYPE

■ MODELS : AUXB07, AUXB09, AUXB12, AUXB14, AUXB18

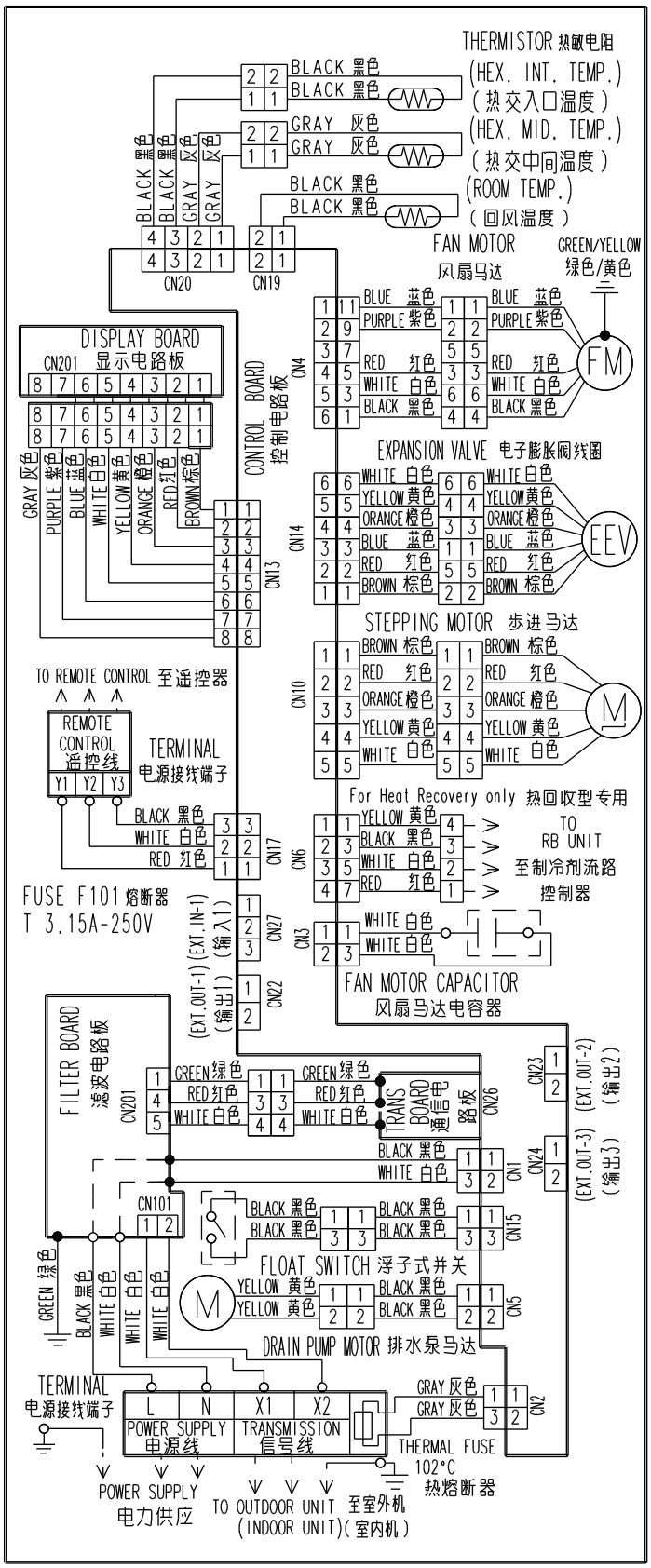

INDOOR UNIT

4-6-2. CASSETTE TYPE

■MODELS : AU∗A20, AU∗A25, AU∗A30

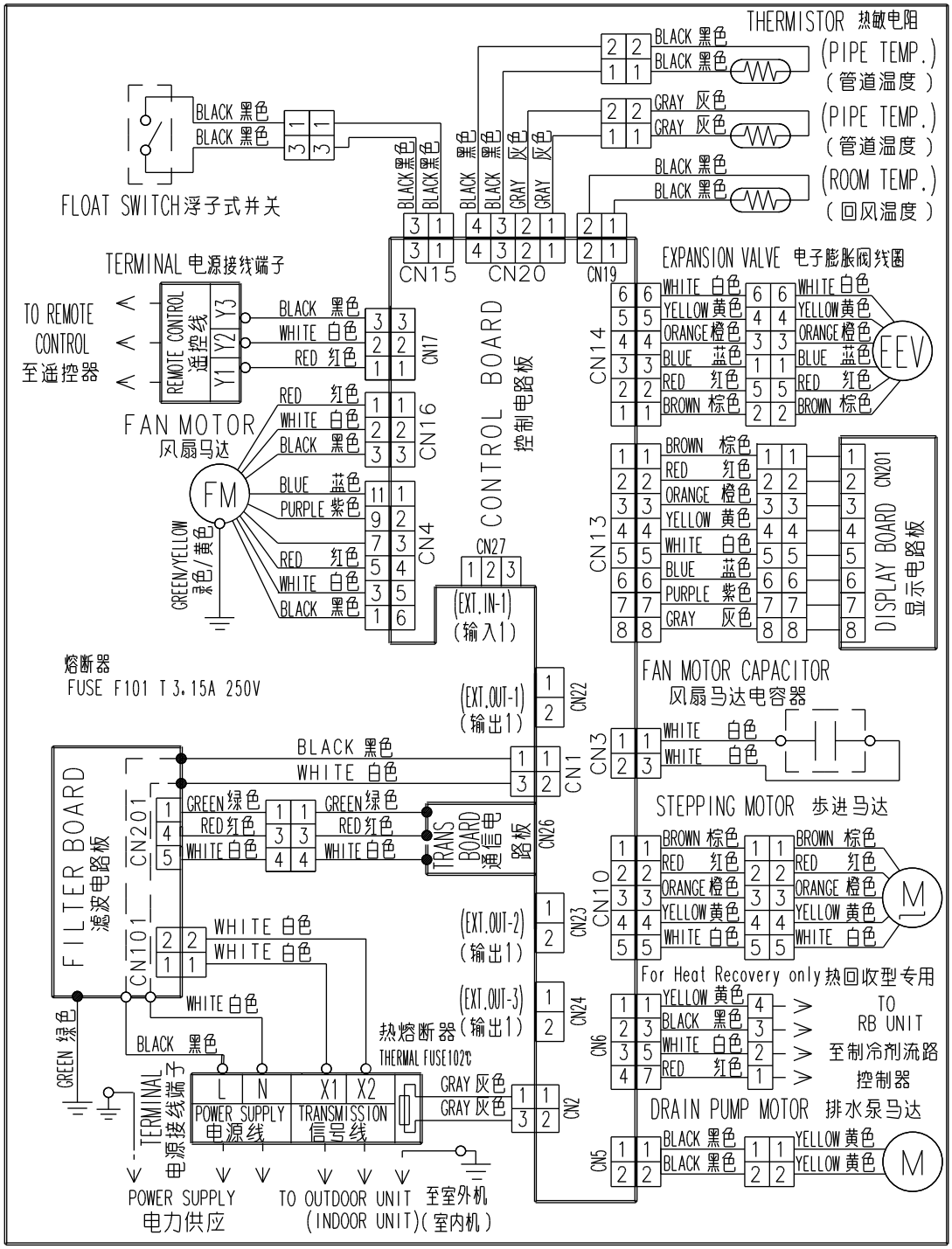

INDOOR UNIT

■MODELS : AU*A36, AU*A45, AU*A54

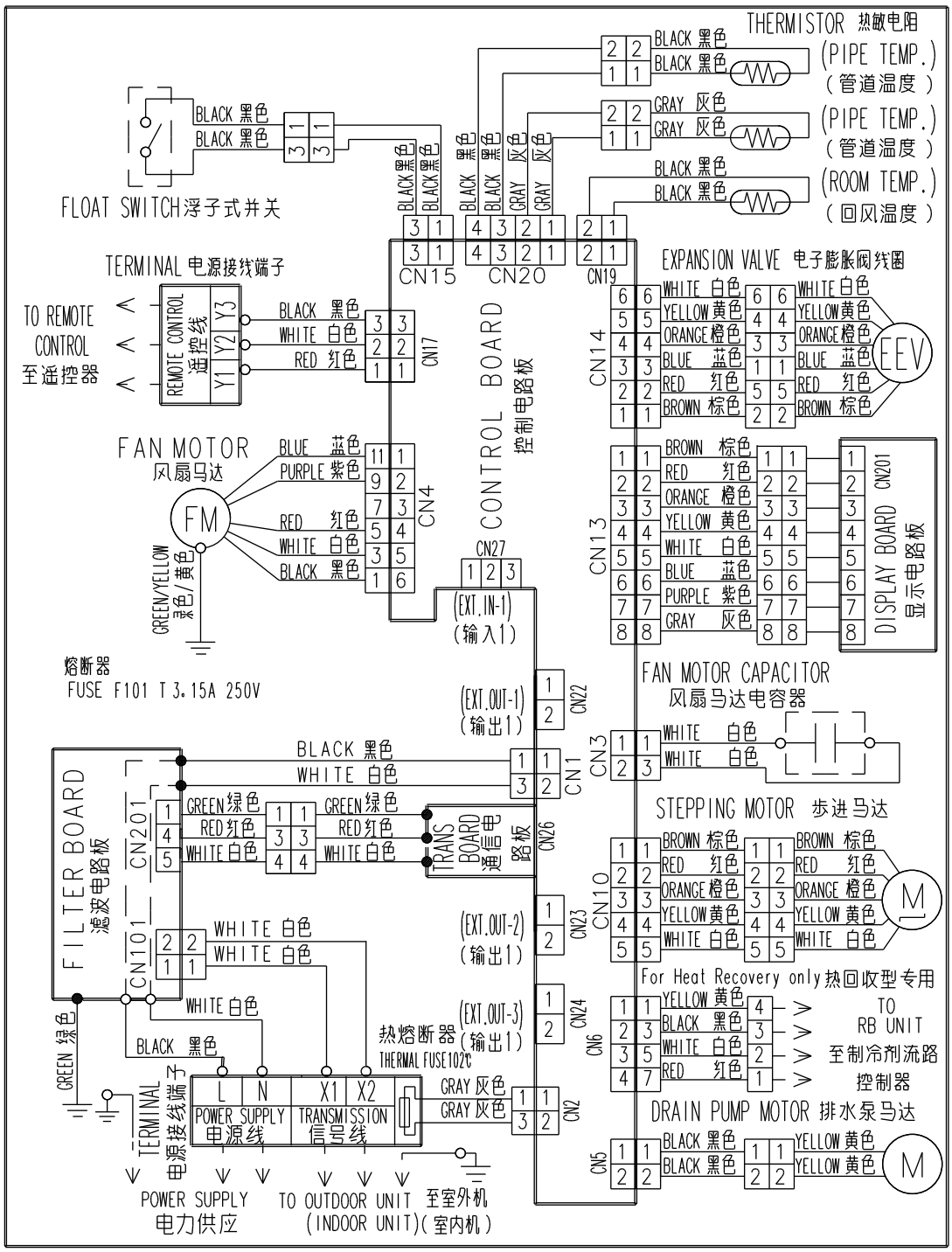

INDOOR UNIT

4-6-3. COMPACT DUCT TYPE

■MODELS : ARXB07, ARXB09, ARXB12, ARXB14, ARXB18

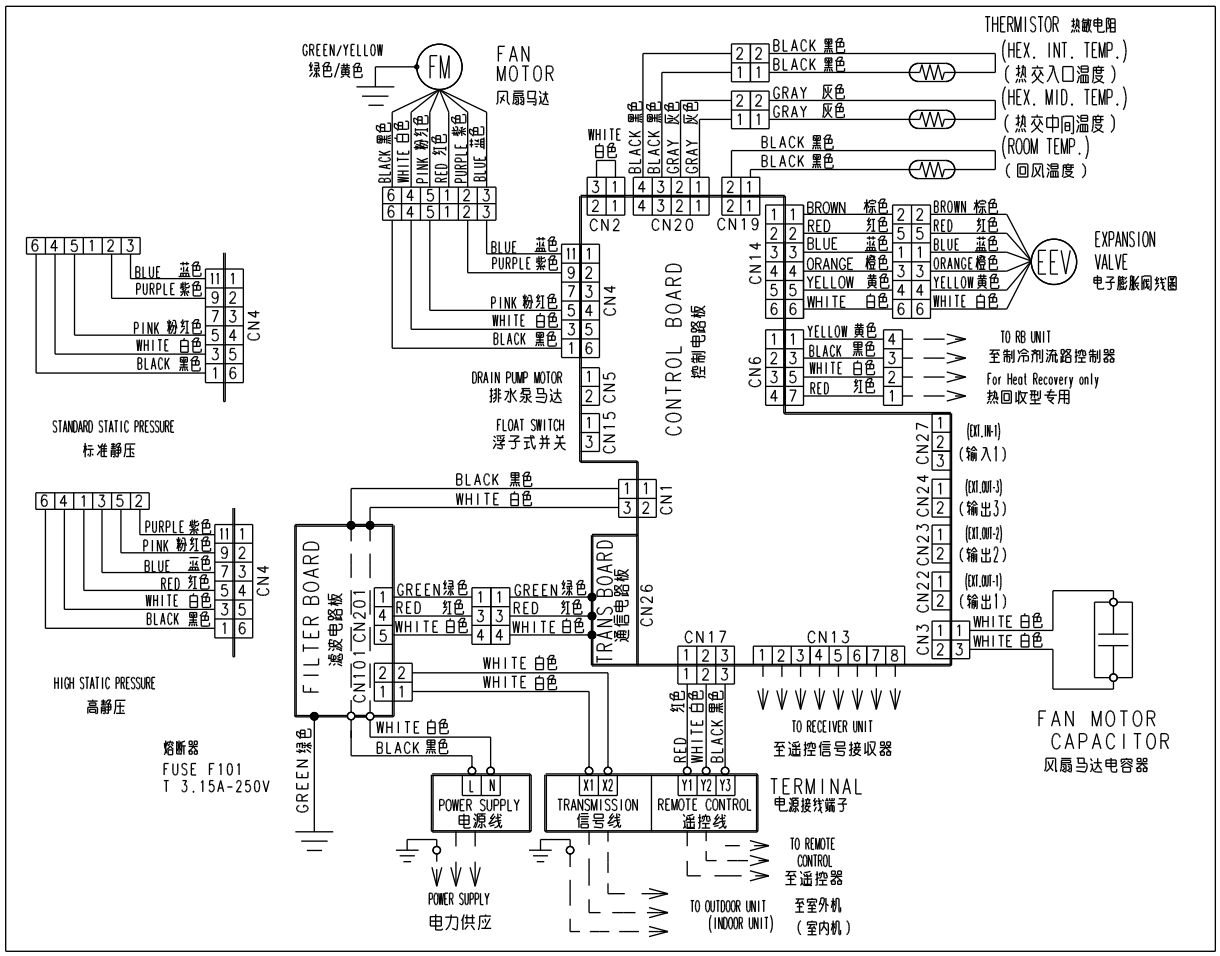

INDOOR UNIT

4-6-4. LOW STATIC PRESSURE DUCT TYPE

■MODEL : ARXB25

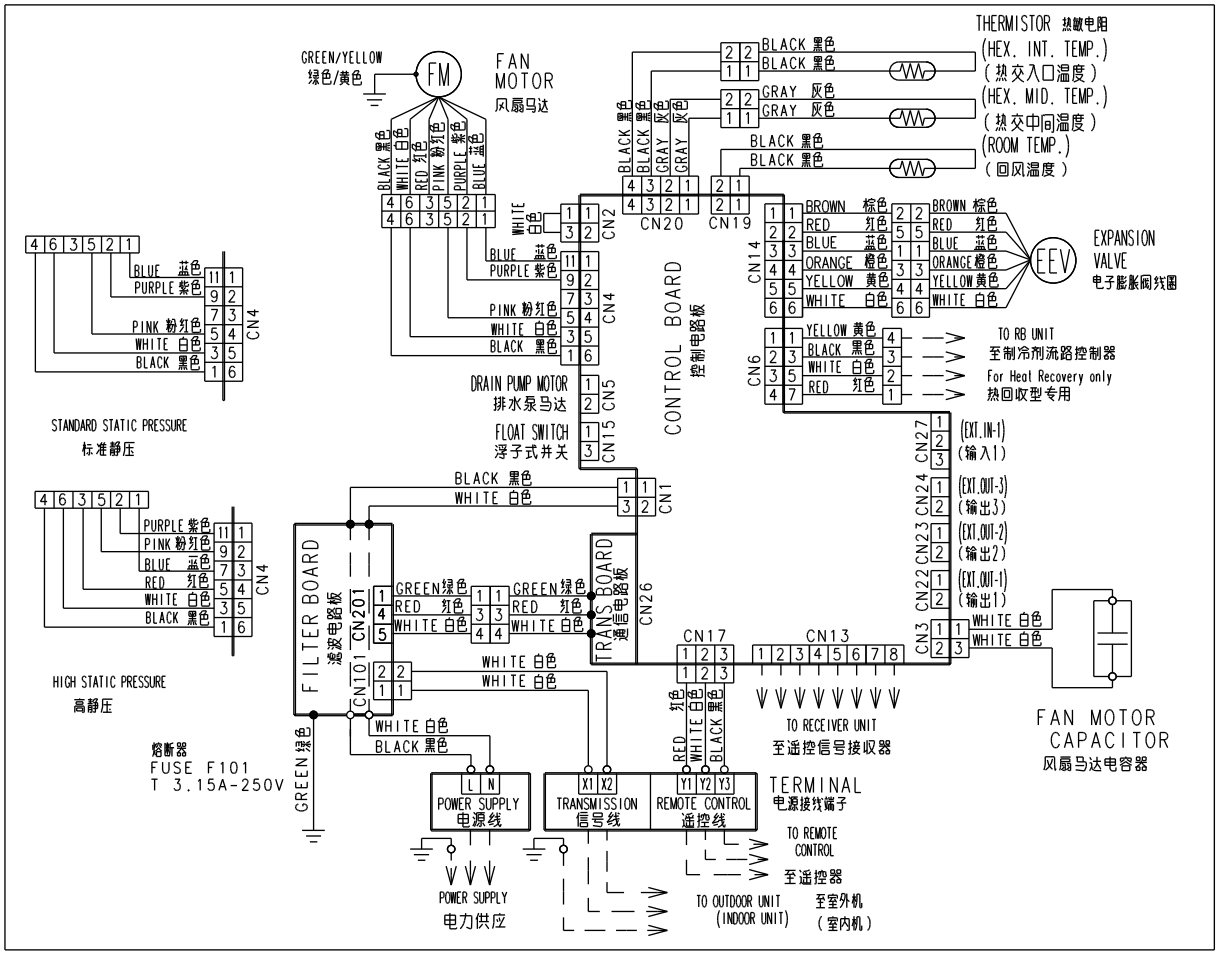

■MODELS : ARXB30, ARXB36, ARXB45

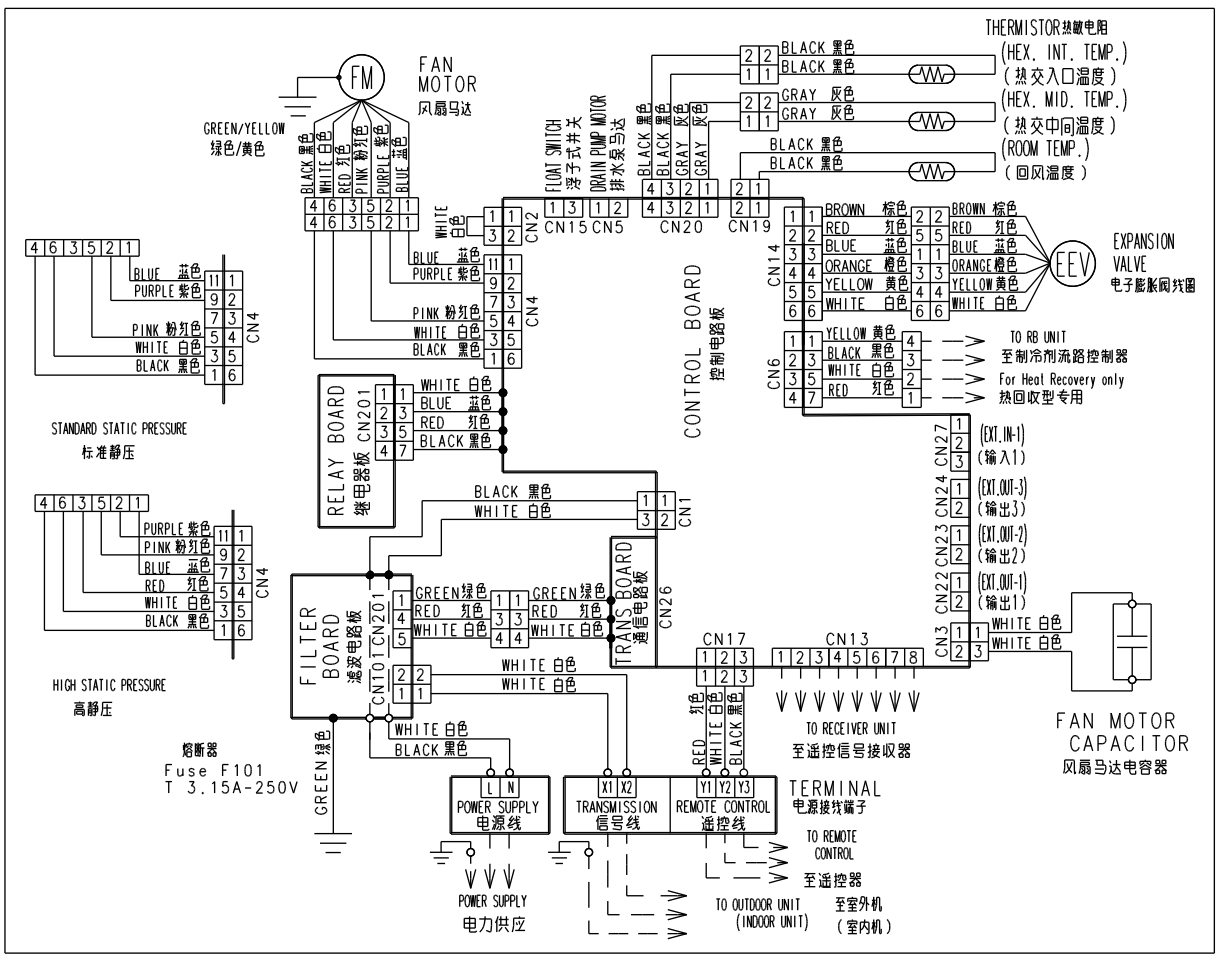

INDOOR UNIT

4-6-5. DUCT TYPE

■ MODEL : ARXA25

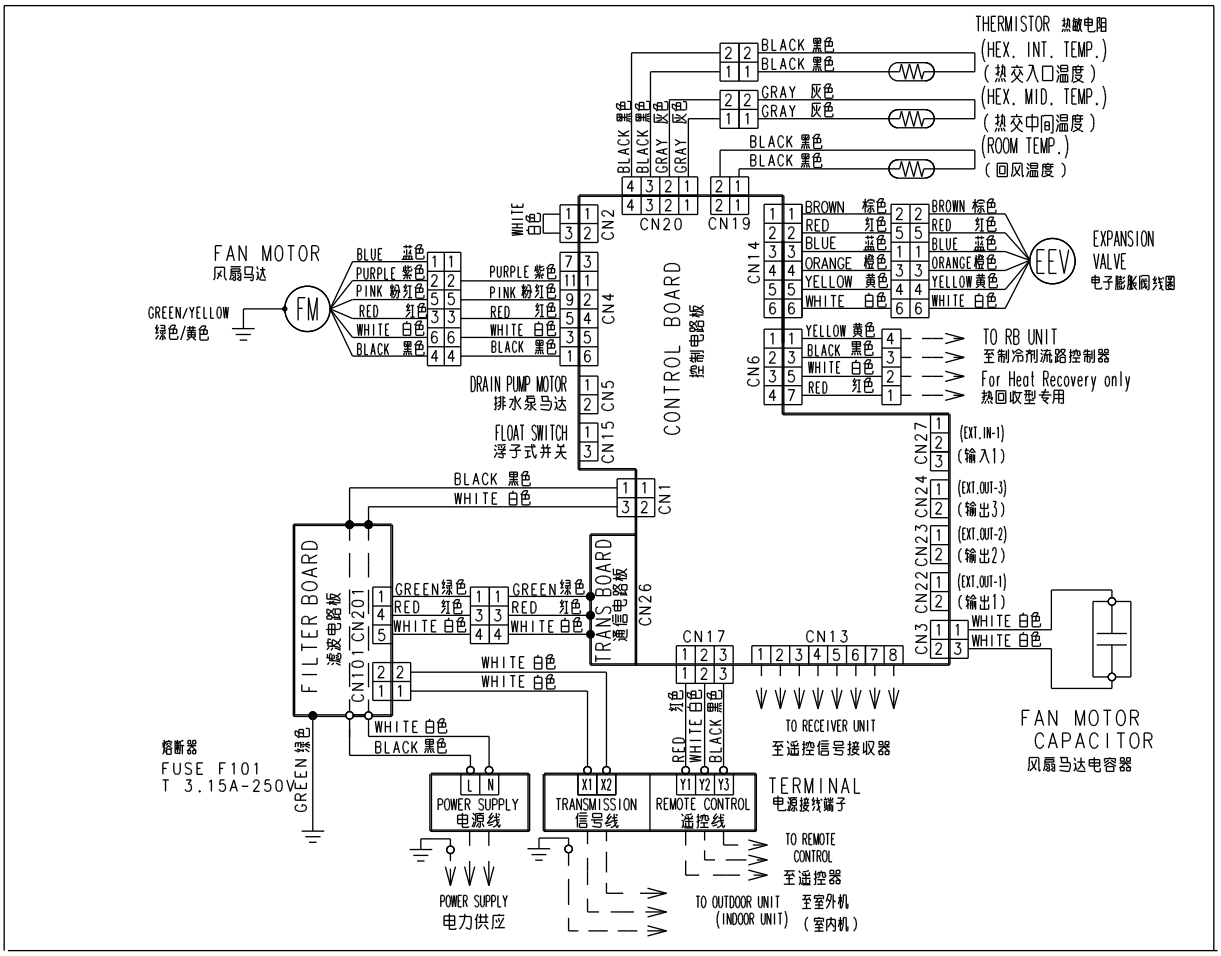

■ MODELS : ARXA30, ARXA36, ARXA45

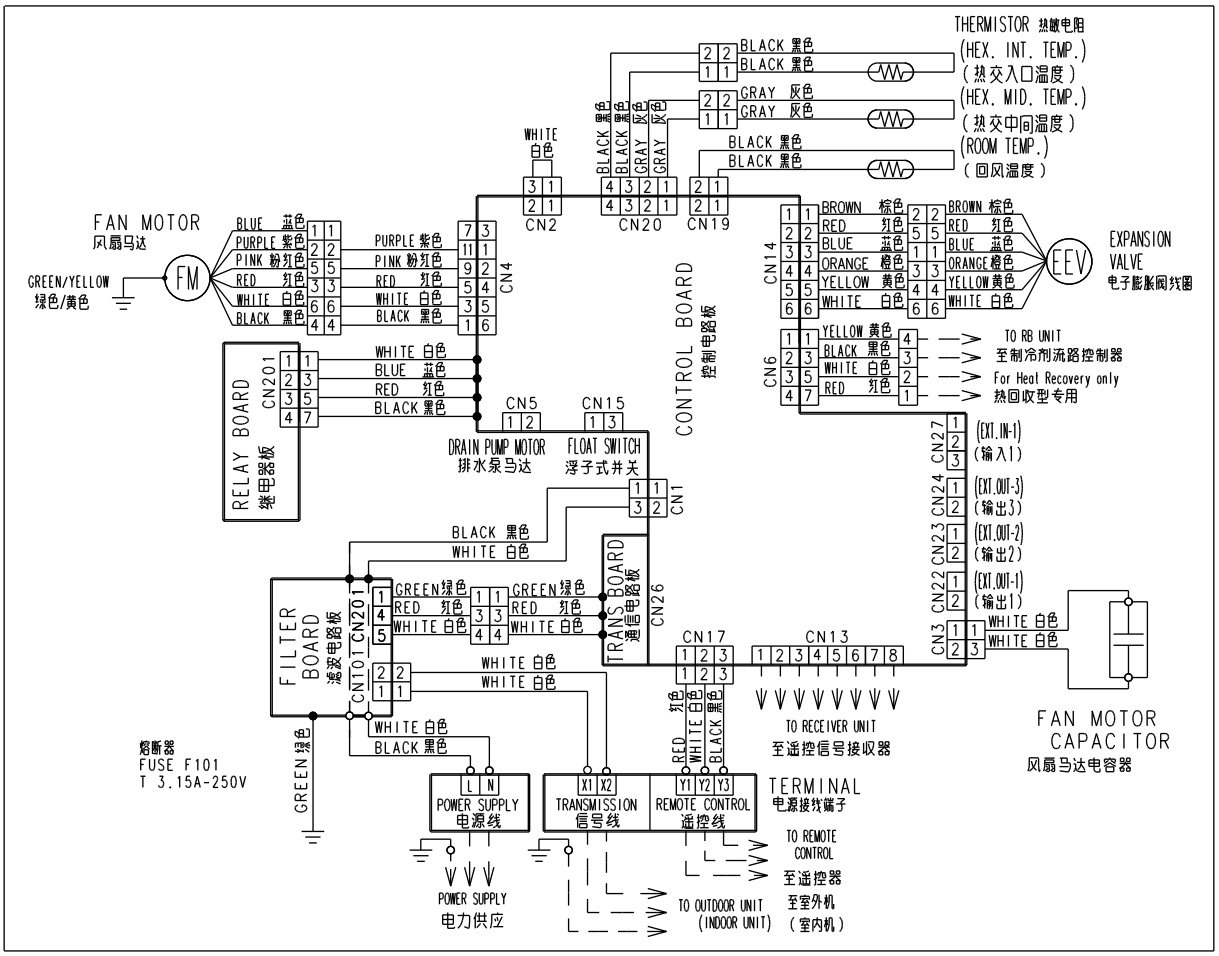

INDOOR UNIT

4-6-6. HIGH STATIC PRESSURE DUCT TYPE

■MODELS : ARXC36, ARXC45, ARXC60

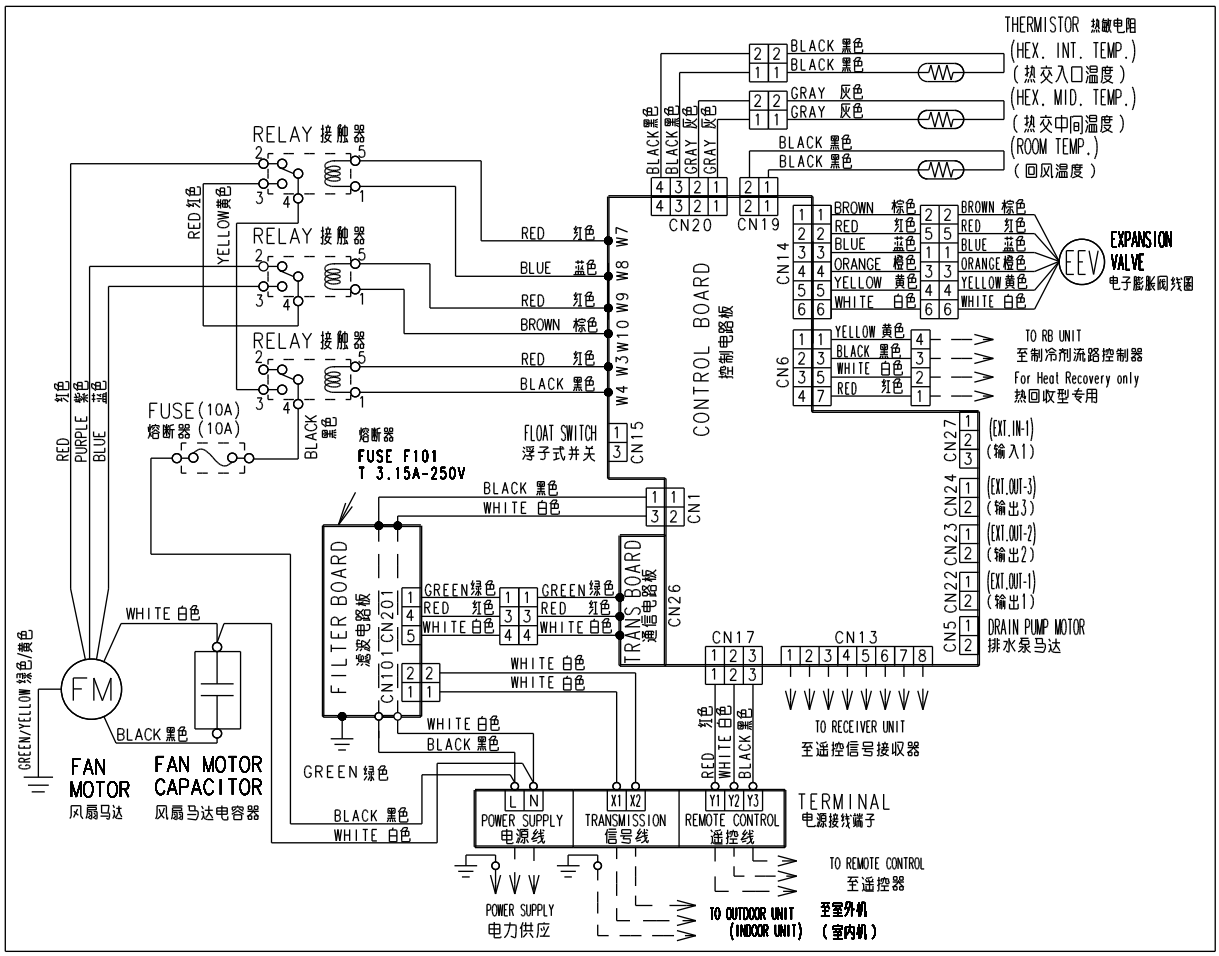

INDOOR UNIT

■MODEL : ARXC90

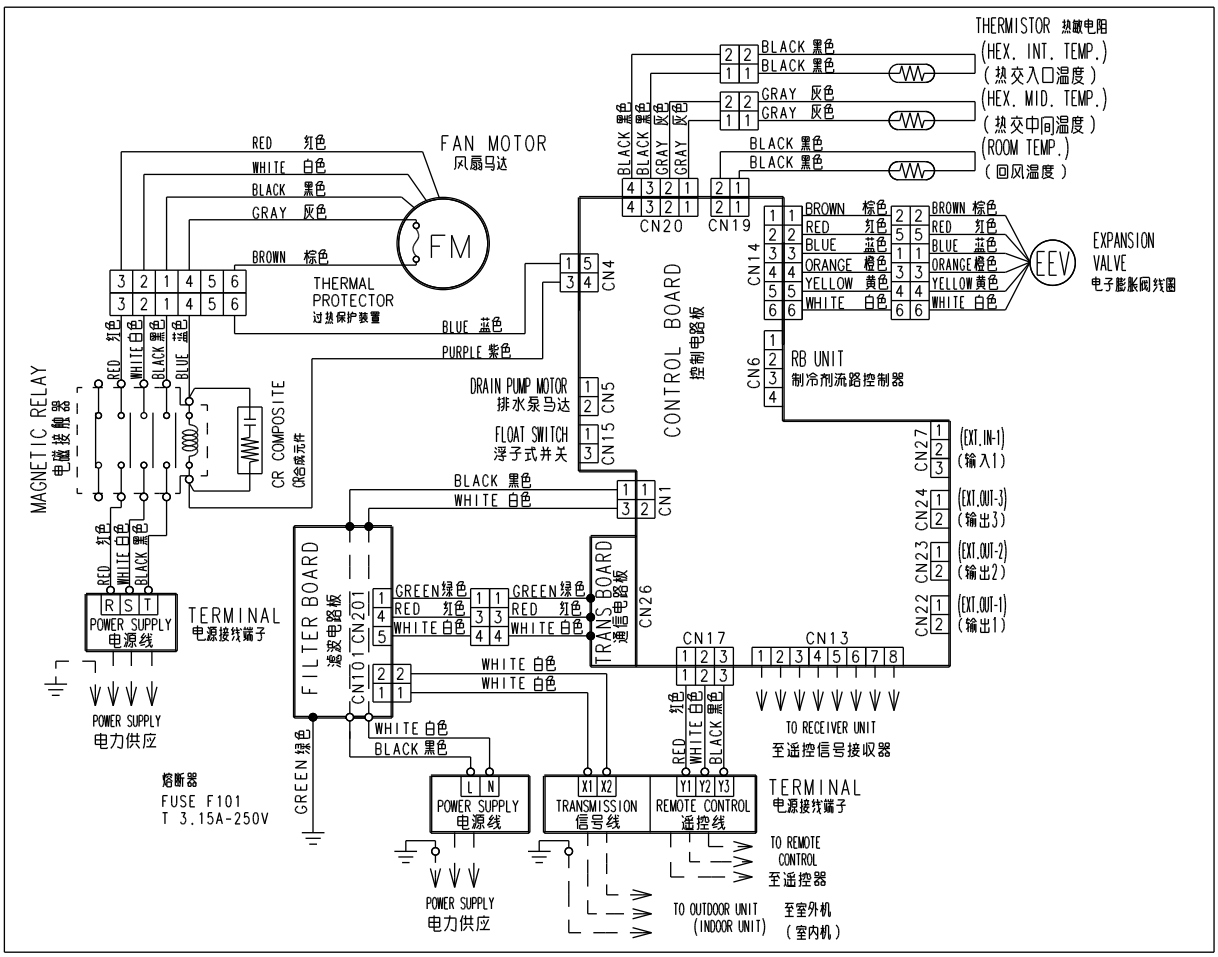

INDOOR UNIT

4-6-7. FLOOR / CEILING TYPE

■MODELS : AB∗A12, AB∗A14, AB∗A18, AB∗A24

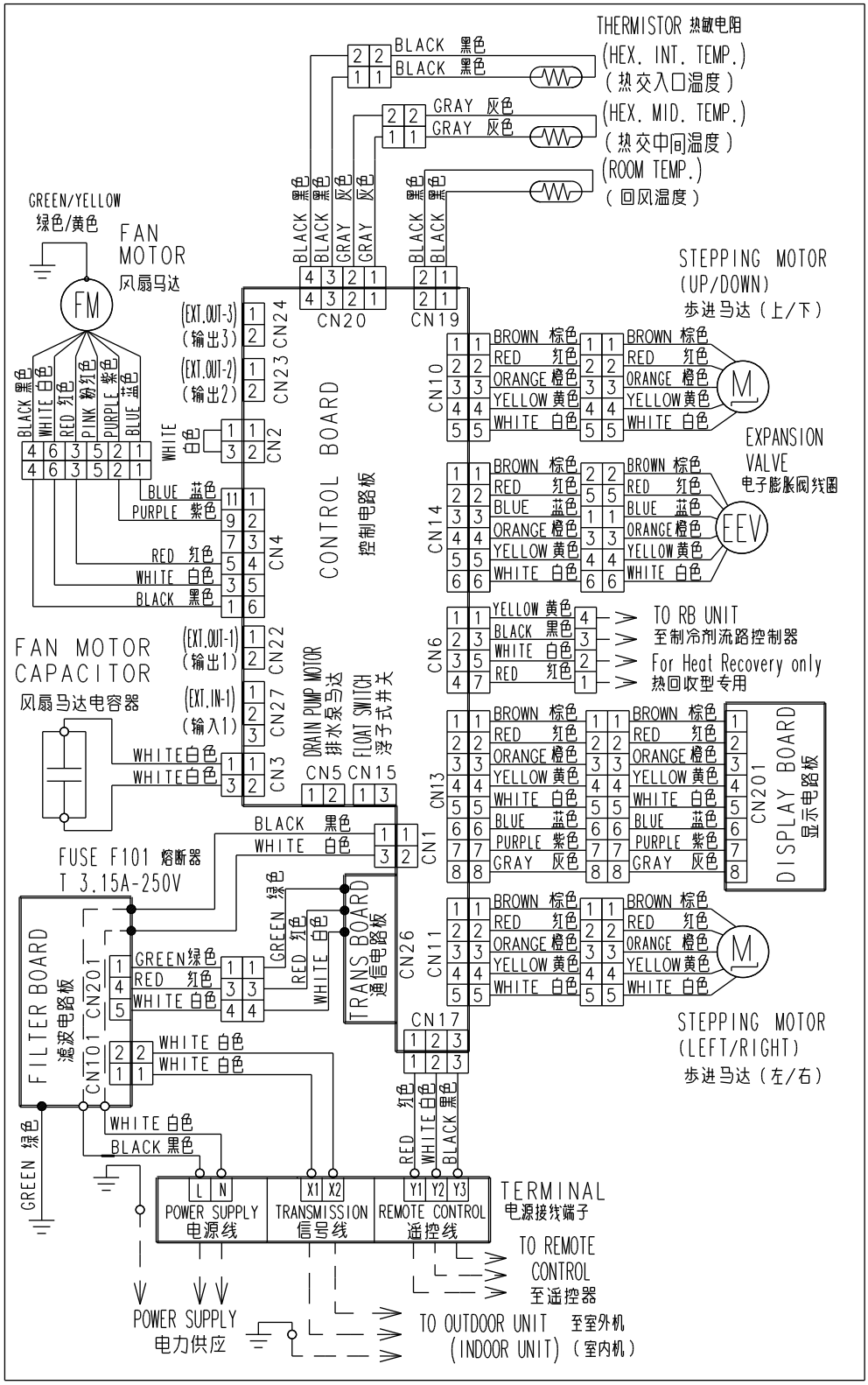

INDOOR UNIT

4-6-8. CEILING TYPE

■MODELS : AB∗A30, AB∗A36, AB∗A45, AB∗A54

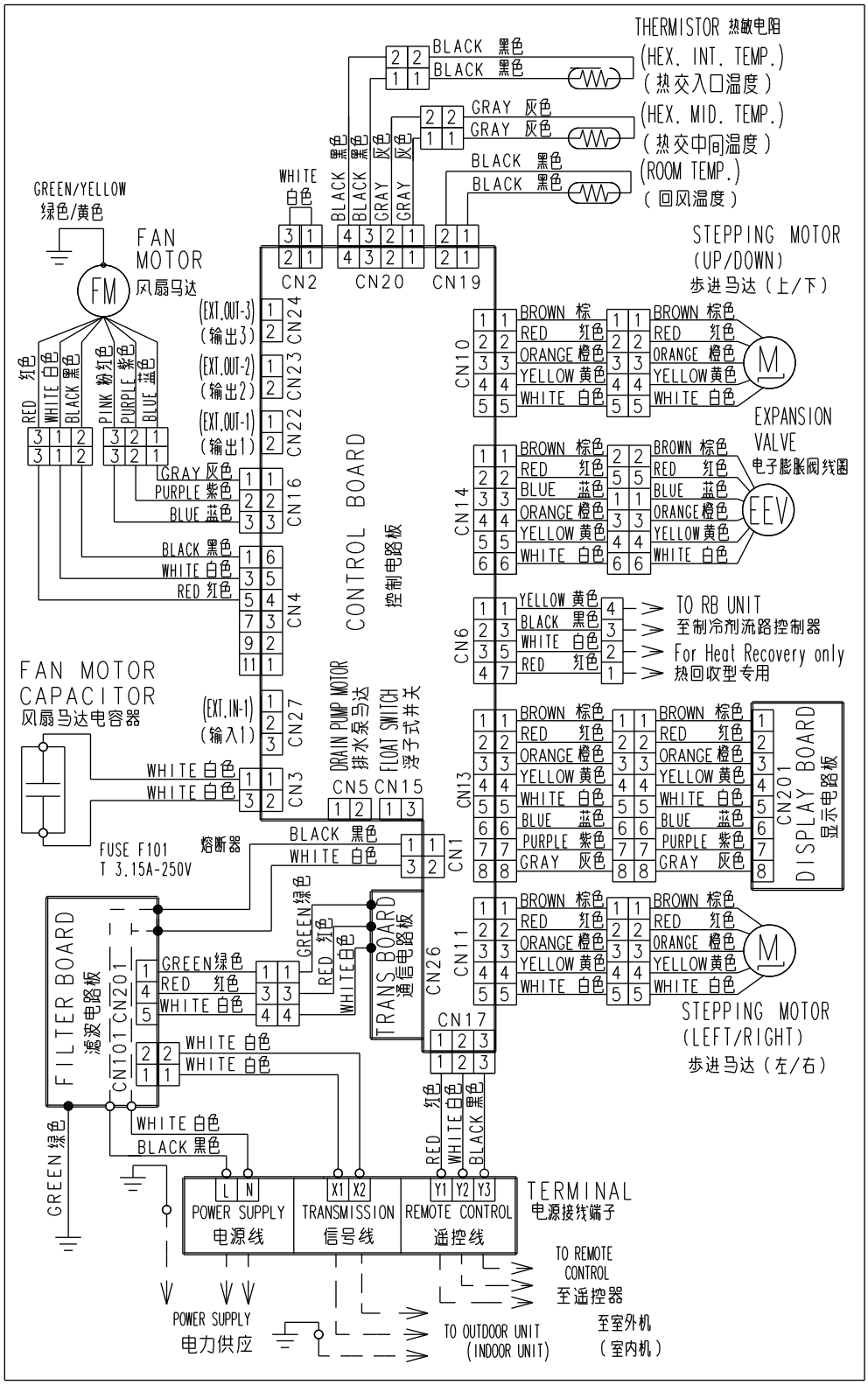

INDOOR UNIT

4-6-9. COMPACT WALL MOUNTED TYPE (Comfort model)

■MODELS : AS∗E07, AS∗E09, AS∗E12, AS∗E14

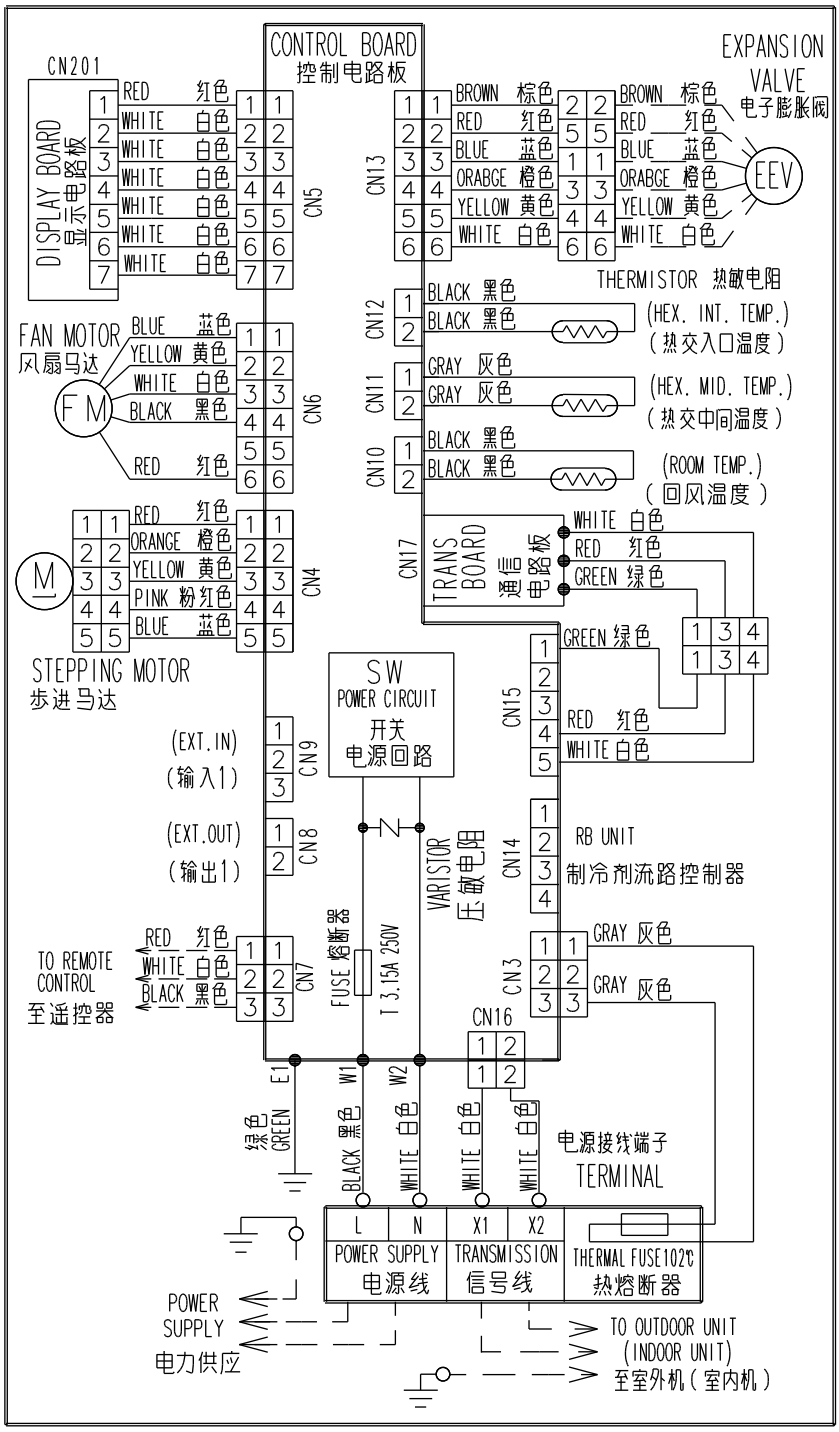

INDOOR UNIT

4-6-10. WALL MOUNTED TYPE

■MODELS : AS∗A18, AS∗A24, AS∗A30

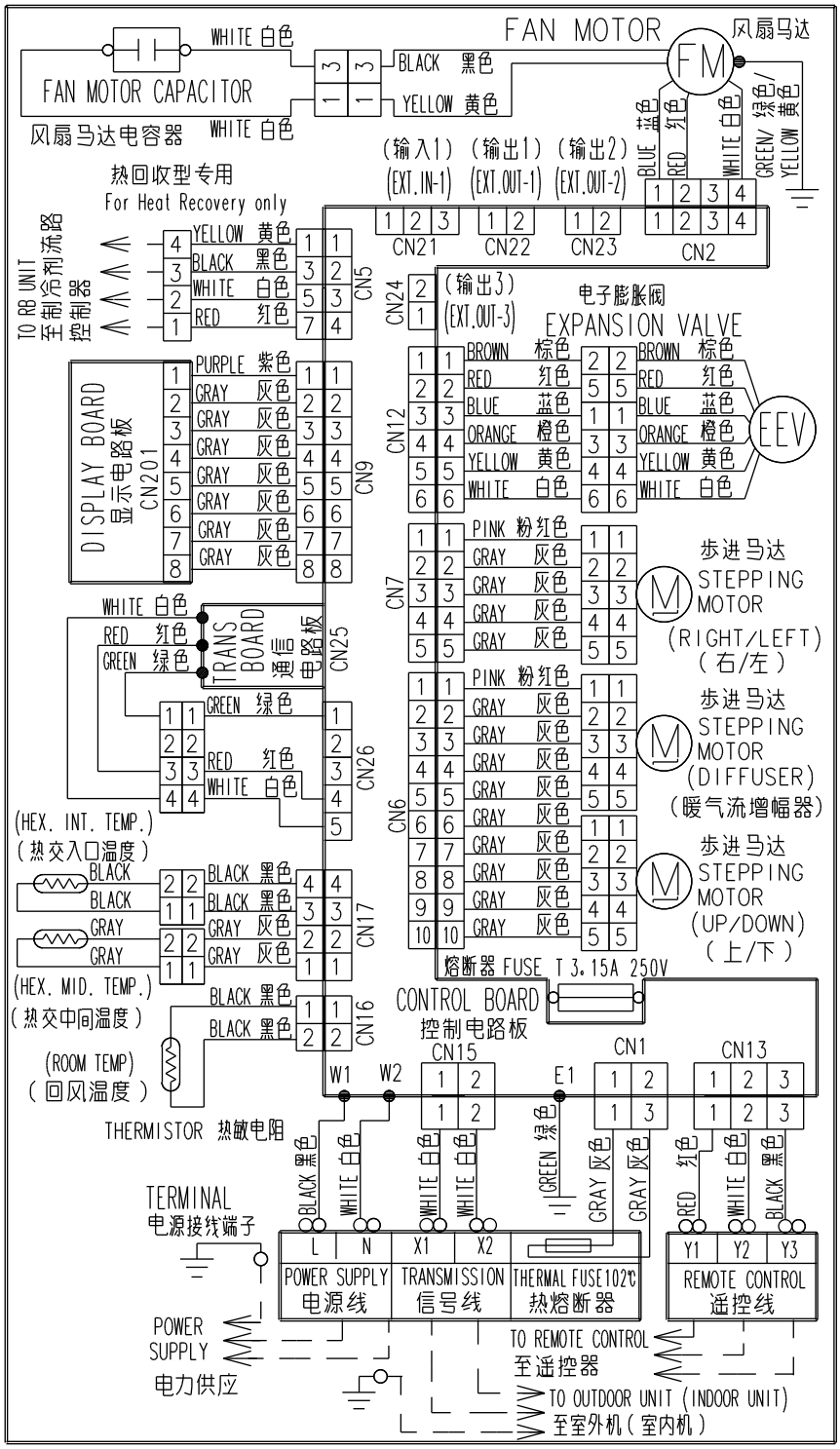

INDOOR UNIT

4-6-11. CEILING WALL TYPE

■MODELS : AW∗A07, AW∗A09, AW∗A12, AW∗A14
AW∗A18, AW∗A24, AW∗A30

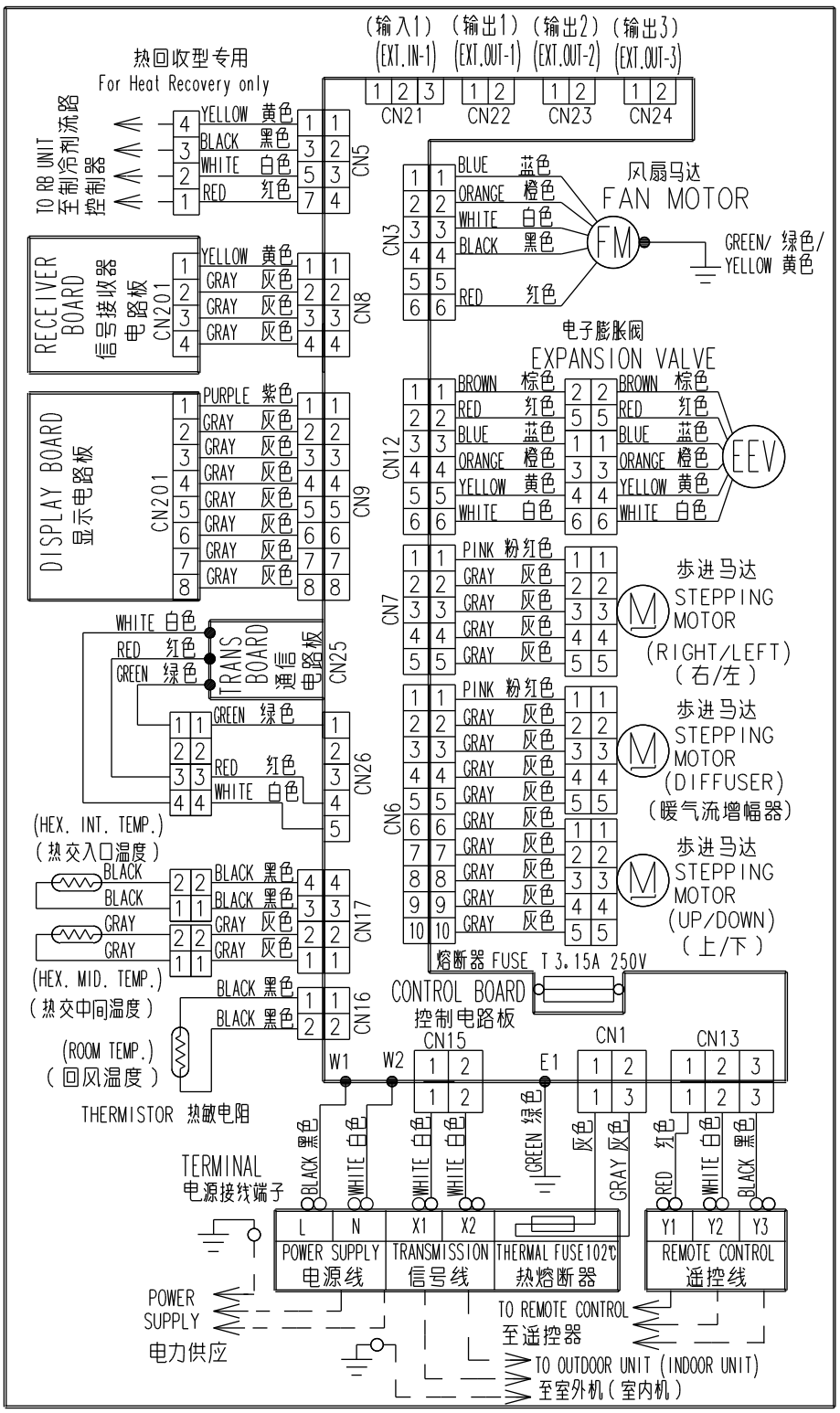

INDOOR UNIT

4-7. AIR VELOCITY DISTRIBUTION

4-7-1. COMPACT CASSETTE TYPE

■MODELS : AUXB07, AUXB09

Conditions
Fan speed : High
Operation mode : Fan
Voltage : 230V

4-WAY AIR OUTLET UNIT : m/s

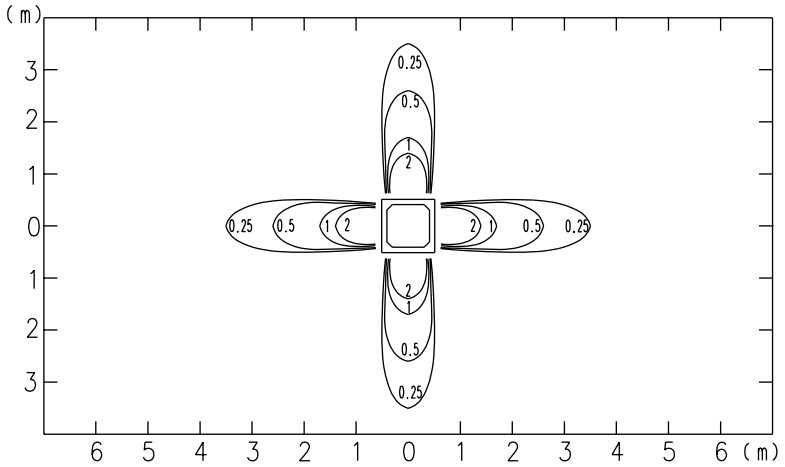

Fig
TOP VIEW
HORIZONTAL LOUVER
:Upward

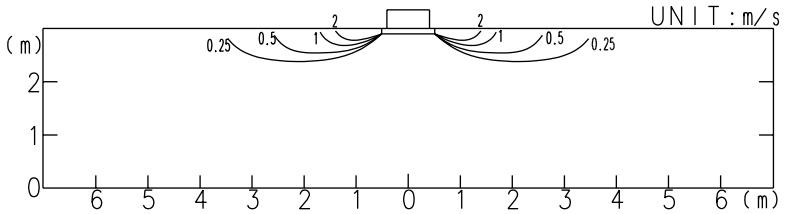

Fig
SIDE VIEW
HORIZONTAL LOUVER
:Upward

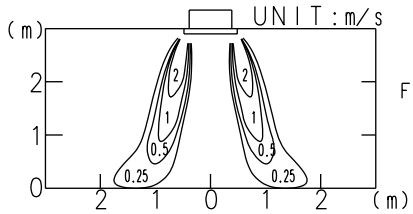

Fig
SIDE VIEW
HORIZONTAL LOUVER
:Downward

2-WAY AIR OUTLET UNIT : m/s

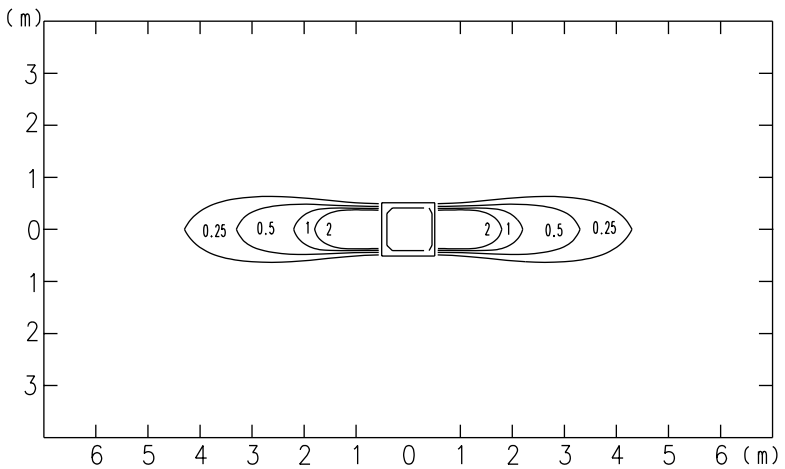

Fig
TOP VIEW
HORIZONTAL LOUVER
:Upward

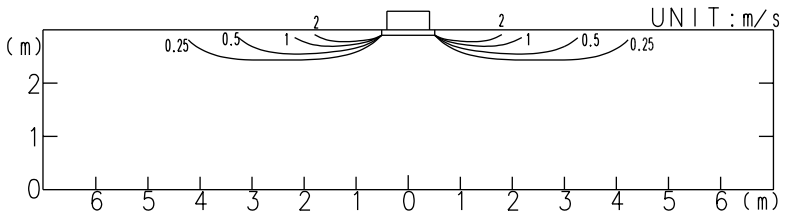

Fig
SIDE VIEW
HORIZONTAL LOUVER
:Upward

INDOOR UNIT

■ MODELS : AUXB12, AUXB14

Conditions
Fan speed : High
Operation mode : Fan
Voltage : 230V

4-WAY AIR OUTLET

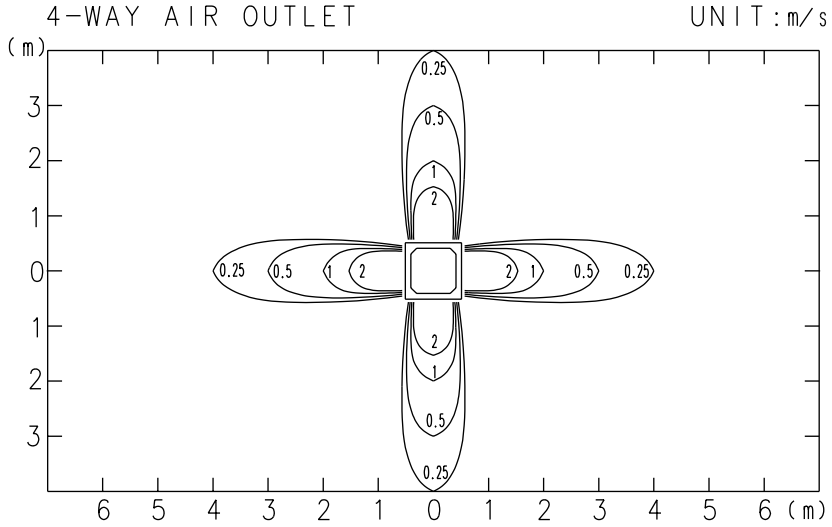

Fig
TOP VIEW
HORIZONTAL LOUVER
:Upward

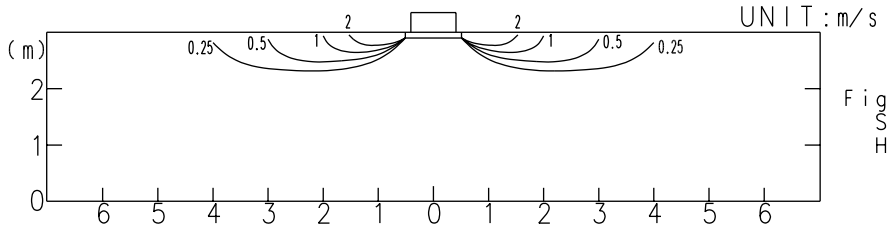

Fig
SIDE VIEW
HORIZONTAL LOUVER
:Upward

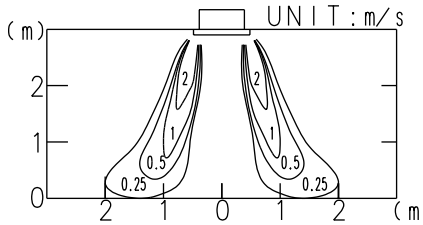

Fig
SIDE VIEW
HORIZONTAL LOUVER
:Downward

AIR DISCHARGE ANGLE

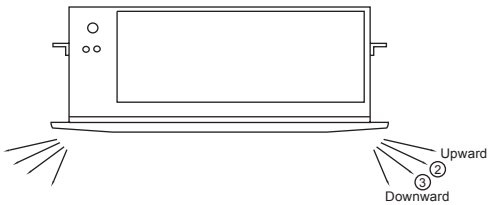

2-WAY AIR OUTLET

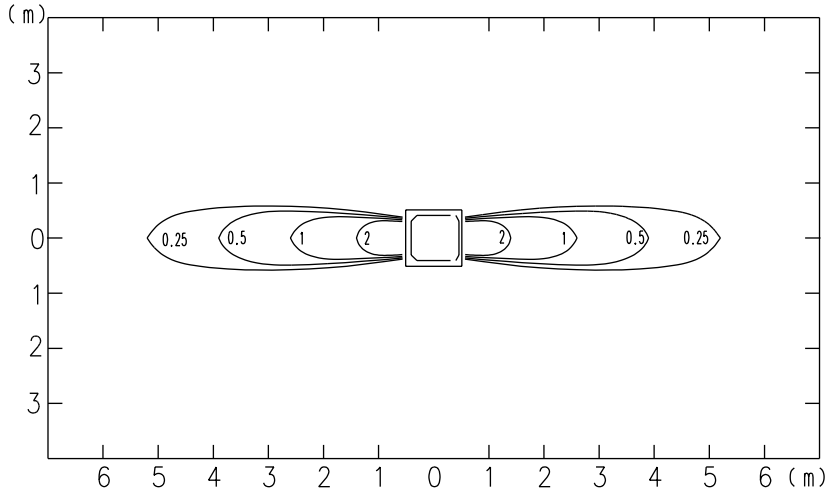

Fig
TOP VIEW
HORIZONTAL LOUVER
:Upward

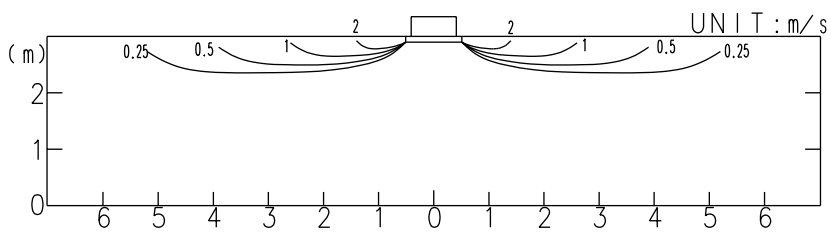

Fig
SIDE VIEW
HORIZONTAL LOUVER
:Upward

■ MODEL : AUXB18

Conditions
Fan speed : High
Operation mode : Fan
Voltage : 230V

4-WAY AIR OUTLET UNIT:m/s

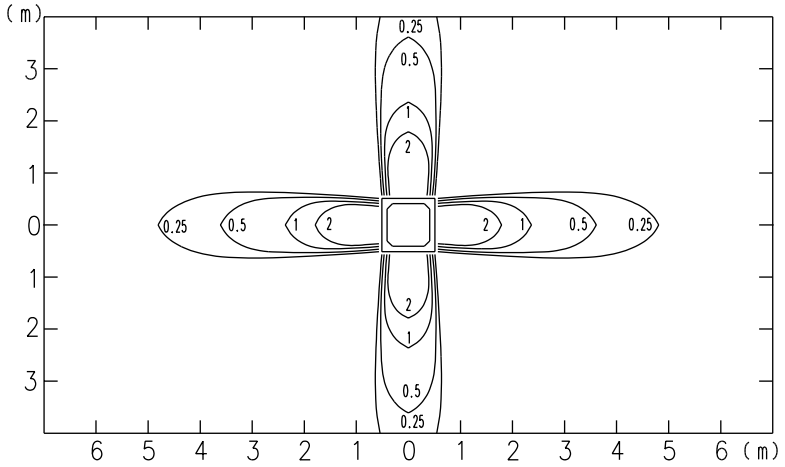

Fig
TOP VIEW
HORIZONTAL LOUVER
:Upward

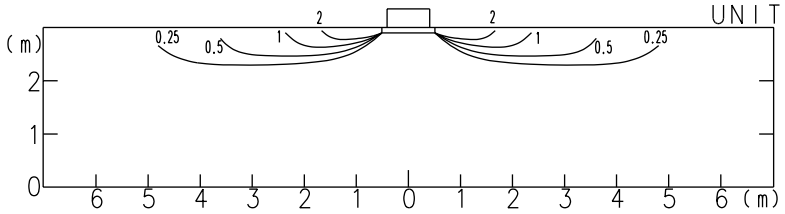

Fig
SIDE VIEW
HORIZONTAL LOUVER
:Upward

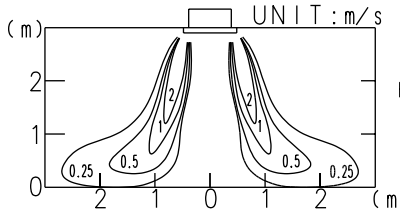

Fig
SIDE VIEW
HORIZONTAL LOUVER
:Downward

AIR DISCHARGE ANGLE

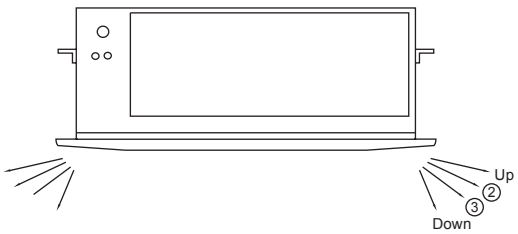

2-WAY AIR OUTLET UNIT:m/s

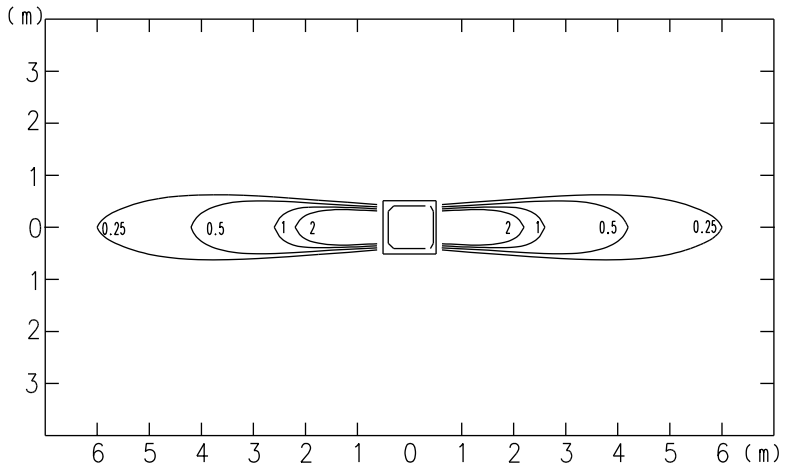

Fig
TOP VIEW
HORIZONTAL LOUVER
:Upward

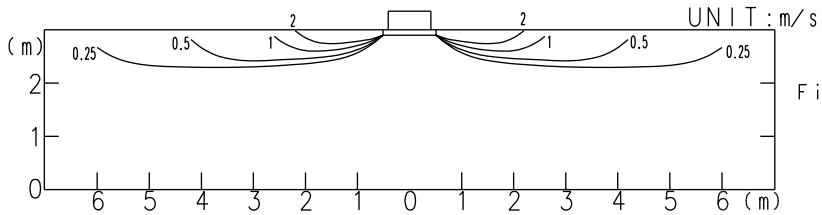

Fig
SIDE VIEW
HORIZONTAL LOUVER
:Upward

INDOOR UNIT

4-7-2. CASSETTE TYPE

■ MODEL : AU∗A20

Conditions
Fan speed : High
Operation mode : Fan
Voltage : 230V

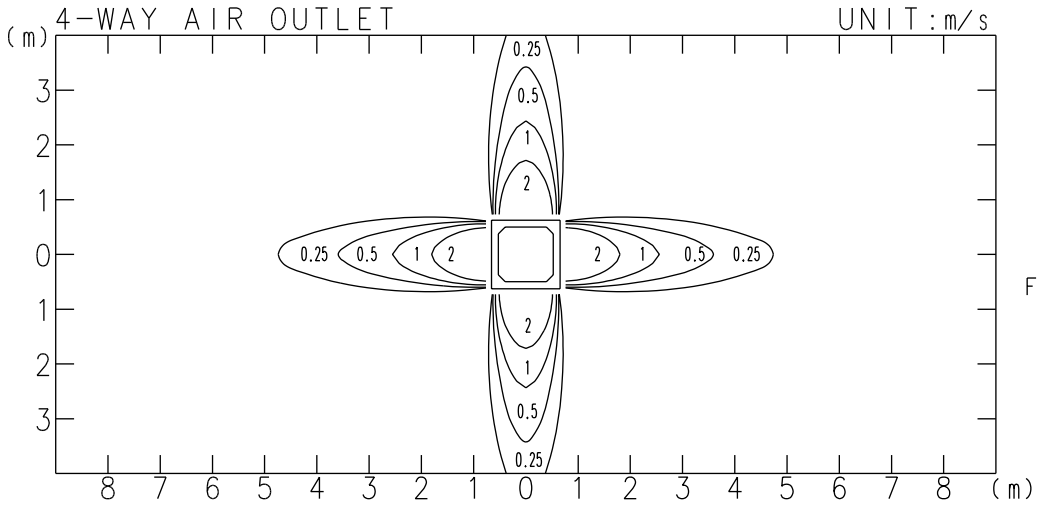

Fig
TOP VIEW
HORIZONTAL LOUVER
:Upward

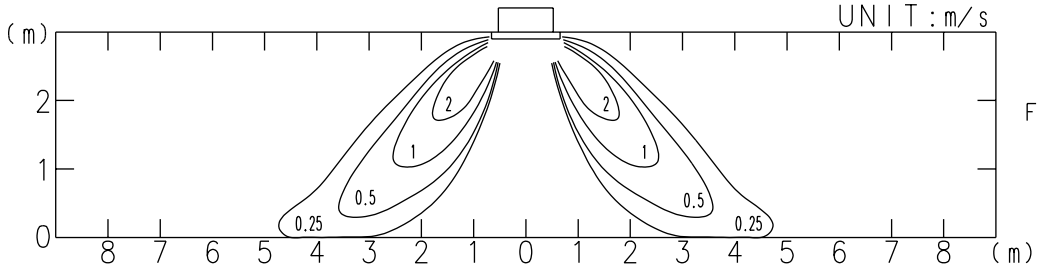

Fig
SIDE VIEW
HORIZONTAL LOUVER
:Upward

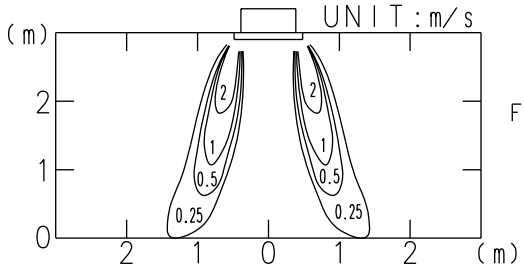

Fig
SIDE VIEW
HORIZONTAL LOUVER
:Downward

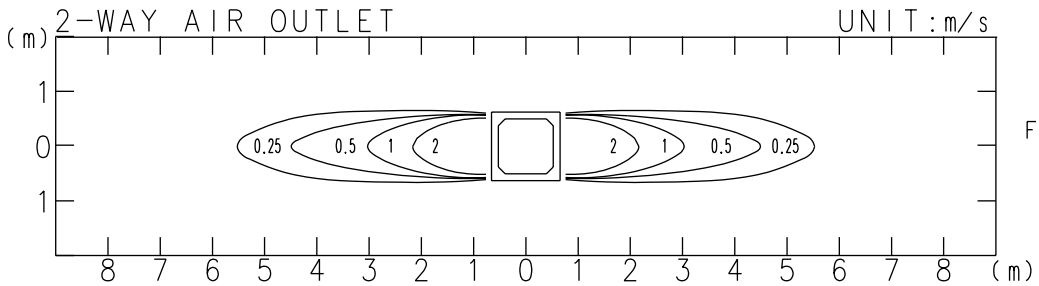

Fig
SIDE VIEW
HORIZONTAL LOUVER
:Upward

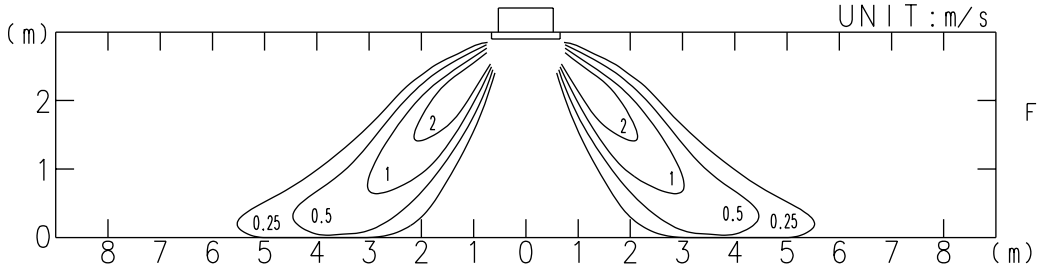

Fig
SIDE VIEW
HORIZONTAL LOUVER
:Upward

INDOOR UNIT

■ MODEL : AU∗A25

Conditions
Fan speed : High
Operation mode : Fan
Voltage : 230V

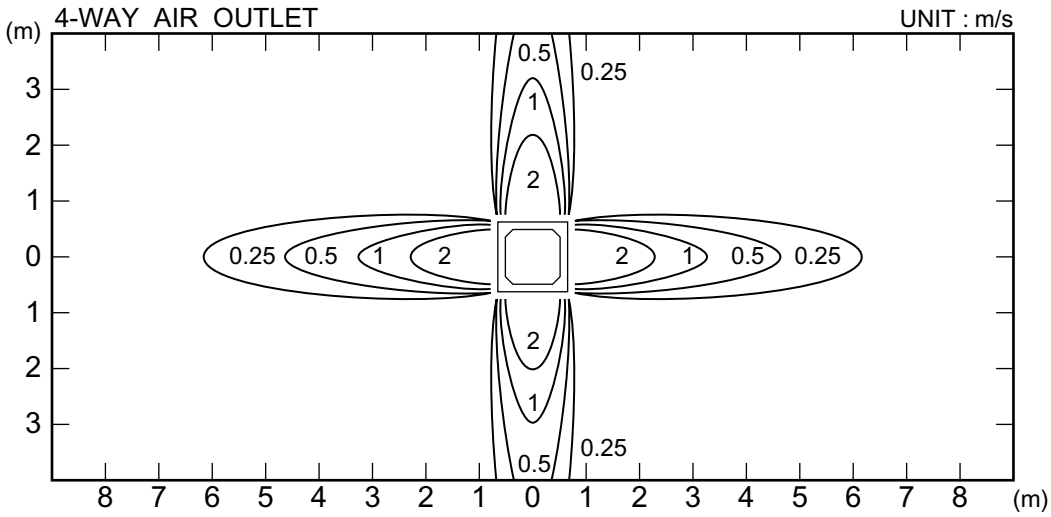

TOP VIEW
AIR FLOW DIRECTION
: Upward

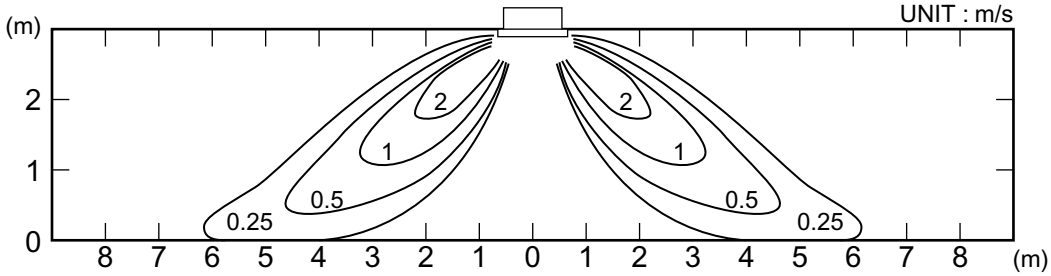

SIDE VIEW
AIR FLOW DIRECTION
: Upward

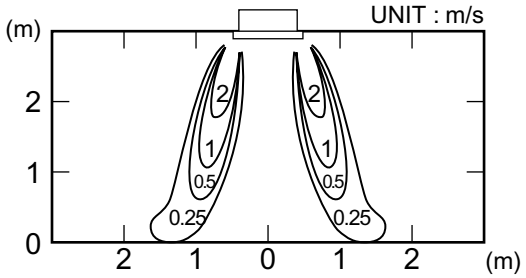

SIDE VIEW
HORIZONTAL LOUVER
: Downward

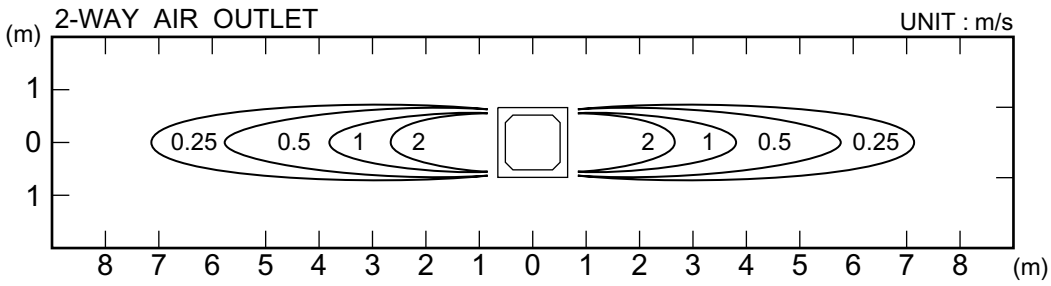

TOP VIEW
AIR FLOW DIRECTION
: Upward

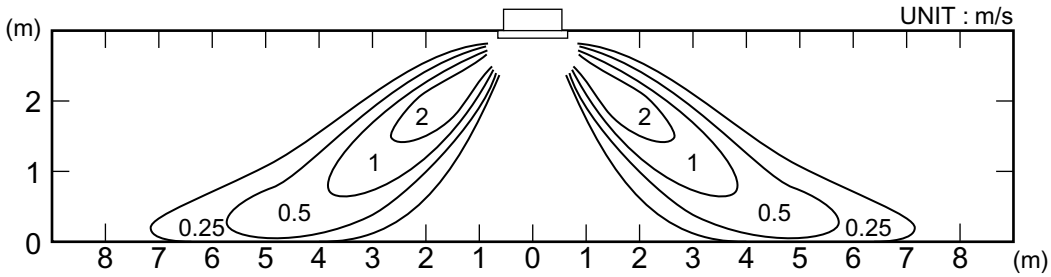

SIDE VIEW
AIR FLOW DIRECTION
: Upward

INDOOR UNIT

■ MODEL : AU∗A30

Conditions
Fan speed : High
Operation mode : Fan
Voltage : 230V

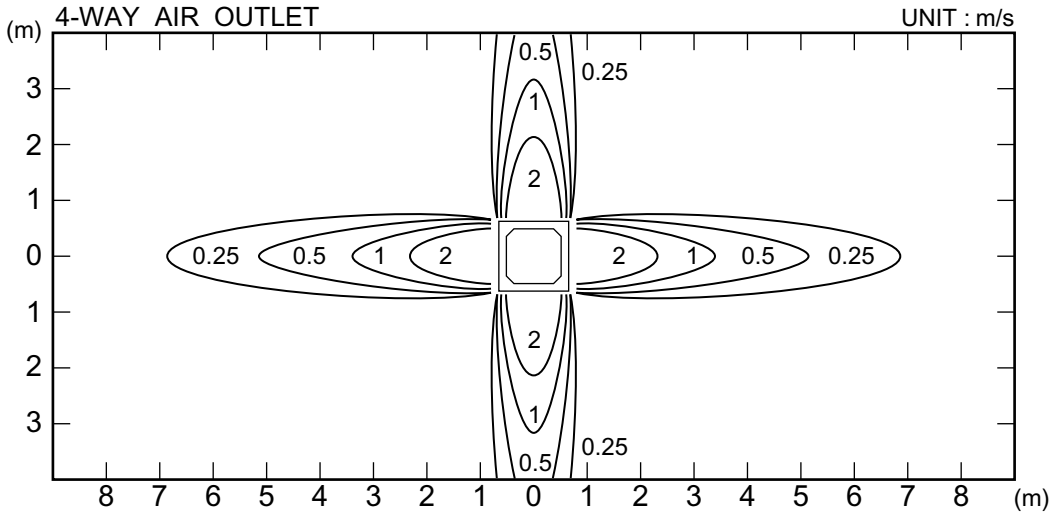

TOP VIEW
AIR FLOW DIRECTION
: Upward

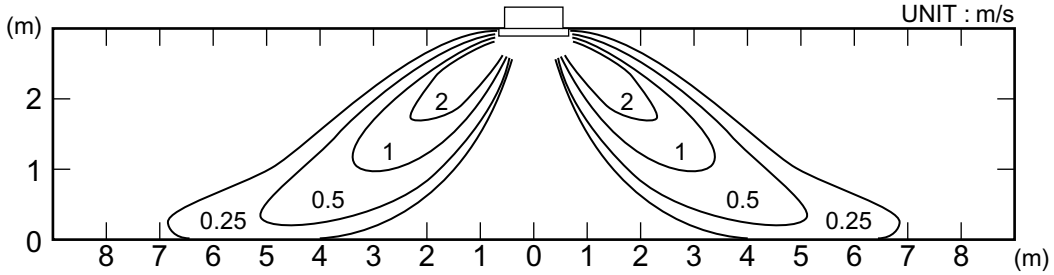

SIDE VIEW
AIR FLOW DIRECTION
: Upward

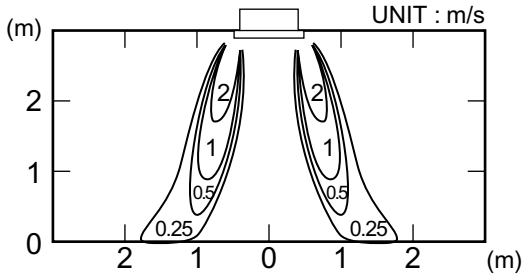

SIDE VIEW
HORIZONTAL LOUVER
: Downward

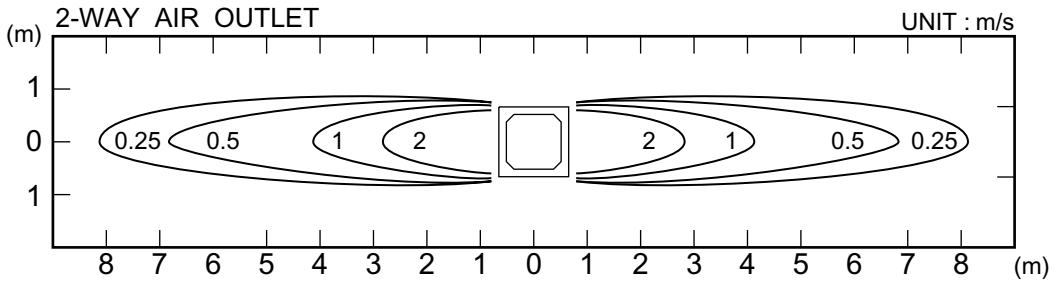

TOP VIEW
AIR FLOW DIRECTION
: Upward

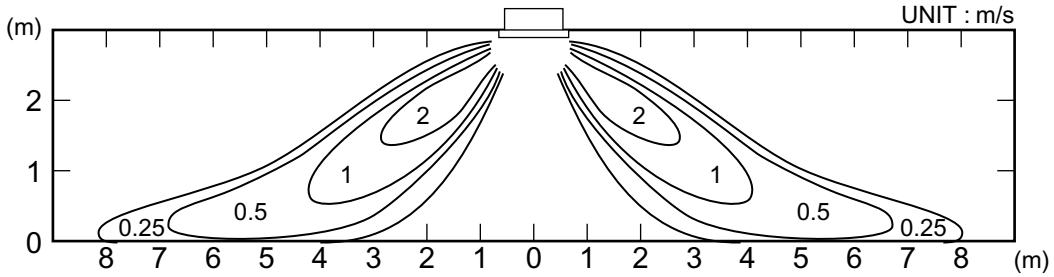

SIDE VIEW
AIR FLOW DIRECTION
: Upward

■MODEL : AU∗A36

Conditions
Fan speed : High
Operation mode : Fan
Voltage : 230V

4-WAY AIR OUTLET

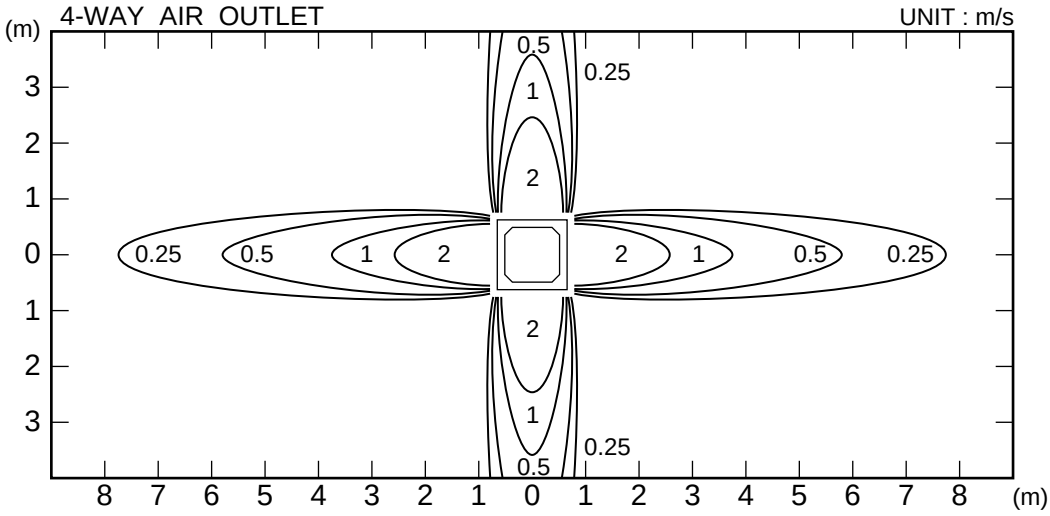

TOP VIEW
AIR FLOW DIRECTION
: Upward

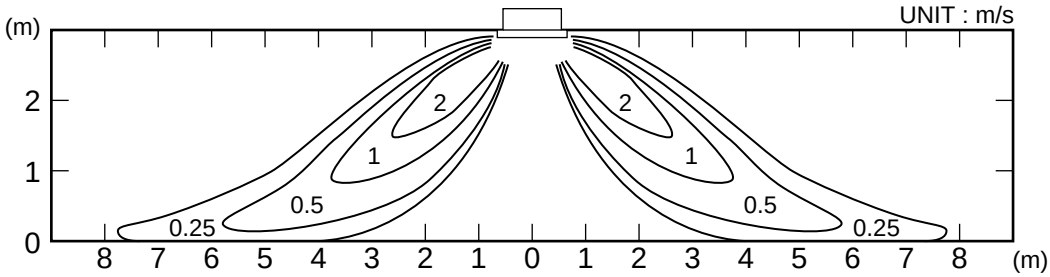

SIDE VIEW
AIR FLOW DIRECTION
: Upward

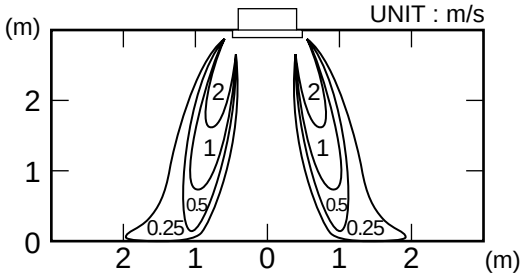

SIDE VIEW
AIR FLOW DIRECTION
: Downward

2-WAY AIR OUTLET

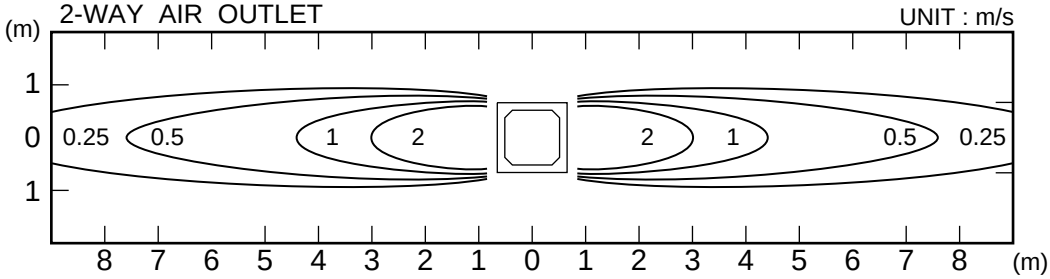

TOP VIEW
AIR FLOW DIRECTION
: Upward

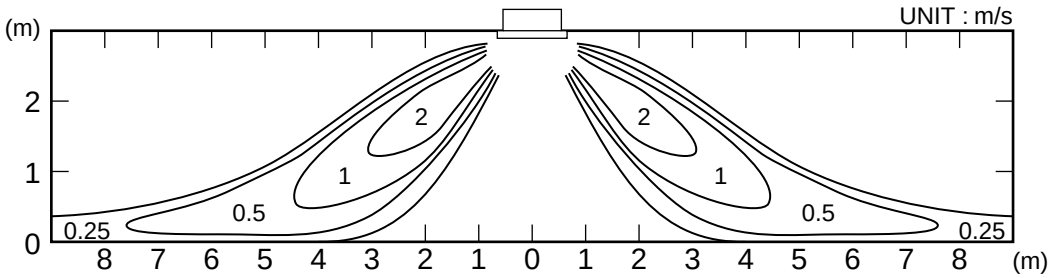

SIDE VIEW
AIR FLOW DIRECTION
: Upward

INDOOR UNIT

■ MODEL : AU∗A45

Conditions
Fan speed : High
Operation mode : Fan
Voltage : 230V

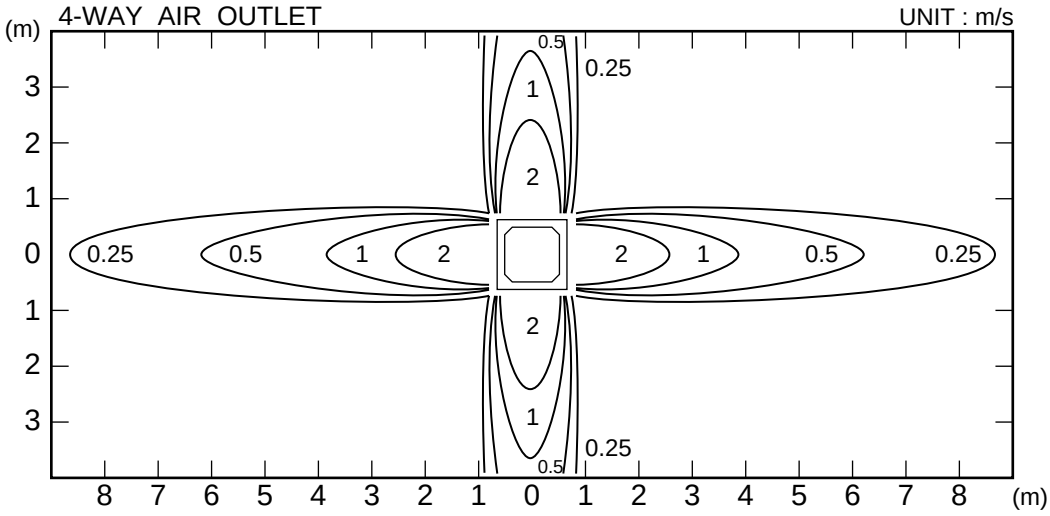

TOP VIEW
AIR FLOW DIRECTION
: Upward

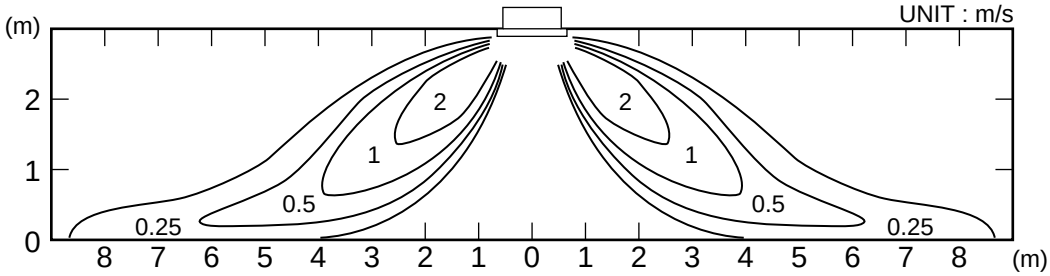

SIDE VIEW
AIR FLOW DIRECTION
: Upward

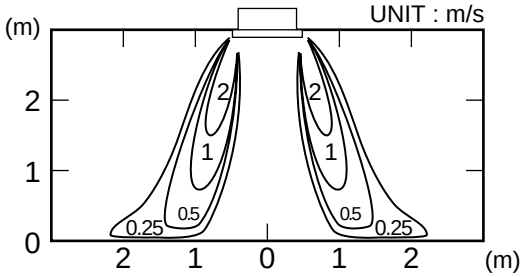

SIDE VIEW
AIR FLOW DIRECTION
: Downward

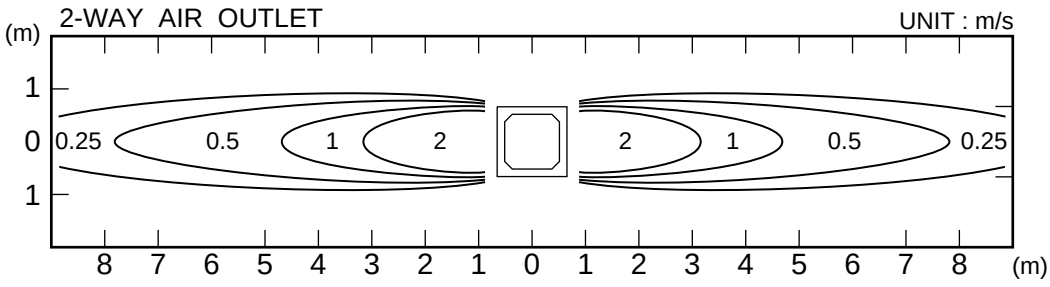

TOP VIEW
AIR FLOW DIRECTION
: Upward

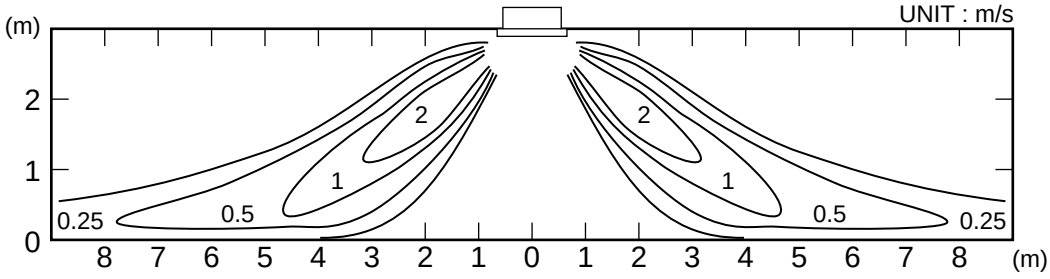

SIDE VIEW
AIR FLOW DIRECTION
: Upward

INDOOR UNIT

■MODEL : AU∗A54

Conditions
Fan speed : High
Operation mode : Fan
Voltage : 230V

4-WAY AIR OUTLET

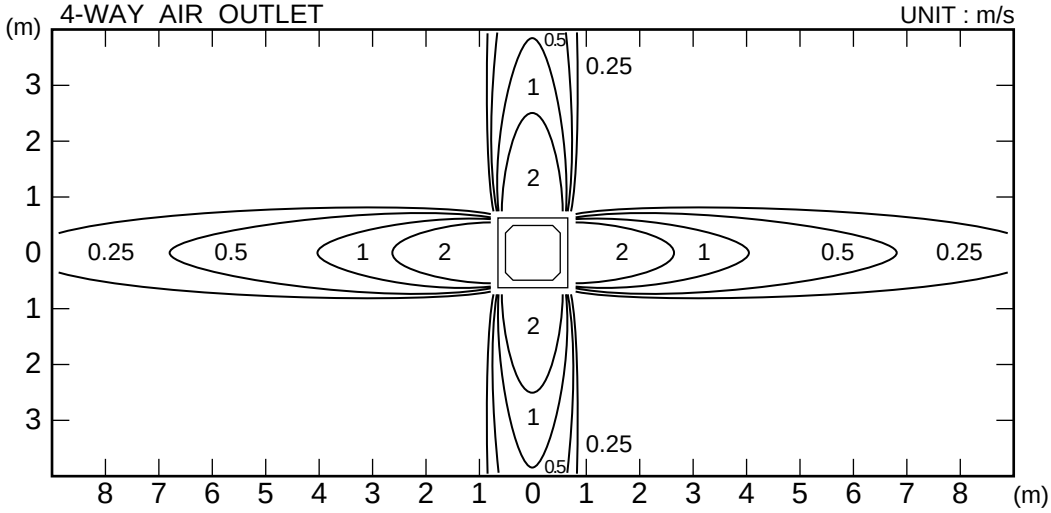

TOP VIEW
AIR FLOW DIRECTION
: Upward

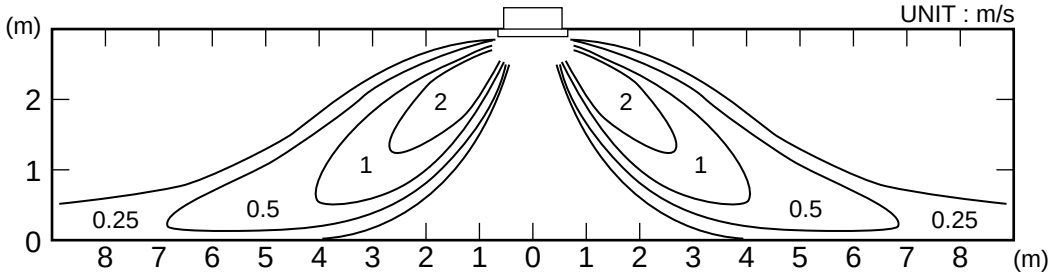

SIDE VIEW
AIR FLOW DIRECTION
: Upward

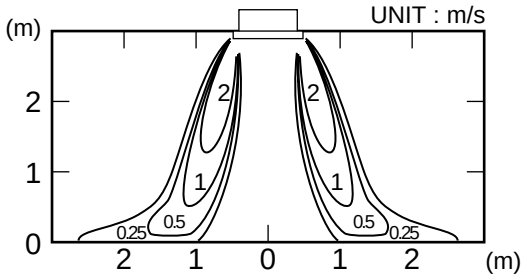

SIDE VIEW
AIR FLOW DIRECTION
: Downward

2-WAY AIR OUTLET

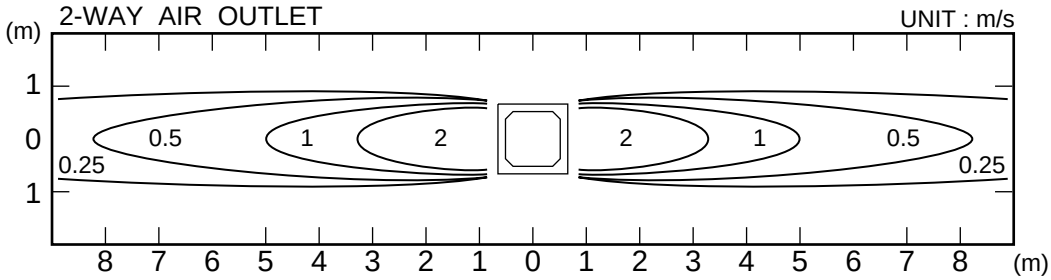

TOP VIEW
AIR FLOW DIRECTION
: Upward

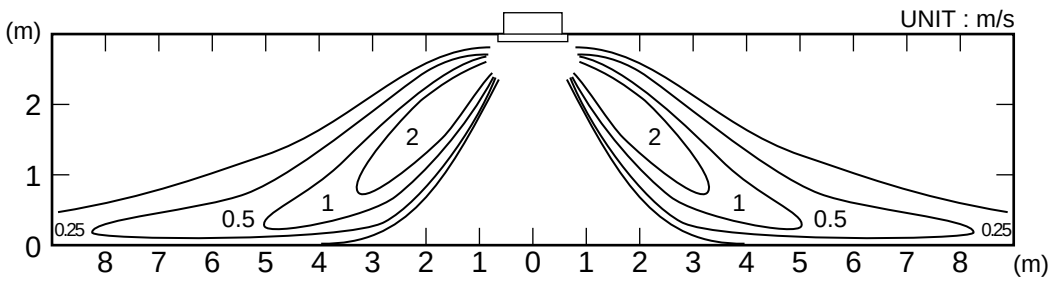

SIDE VIEW
AIR FLOW DIRECTION
: Upward

4-7-3. FLOOR / CEILING TYPE

■ MODELS : AB∗A12, AB∗A14 (FLOOR CONSOLE)

Condition
Fan speed : High
Operation mode : Fan
Voltage : 230V

TOP VIEW
VERTICAL : Forward
HORIZONTAL : Center

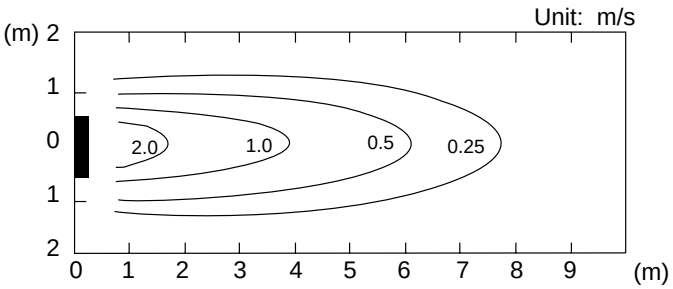

TOP VIEW
VERTICAL : Forward
HORIZONTAL : Right & Left

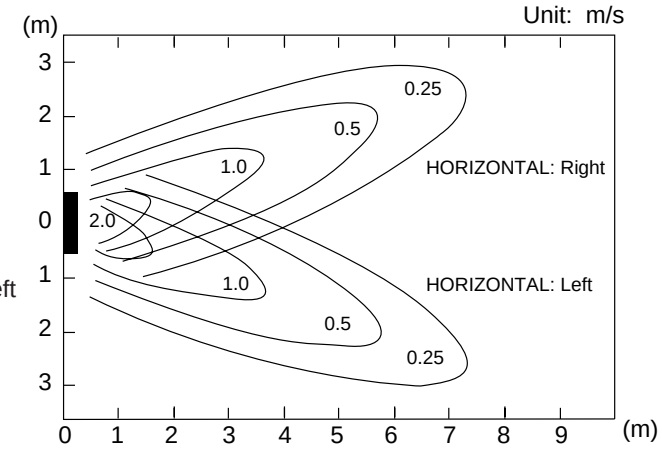

SIDE VIEW
VERTICAL : Forward
HORIZONTAL : Center

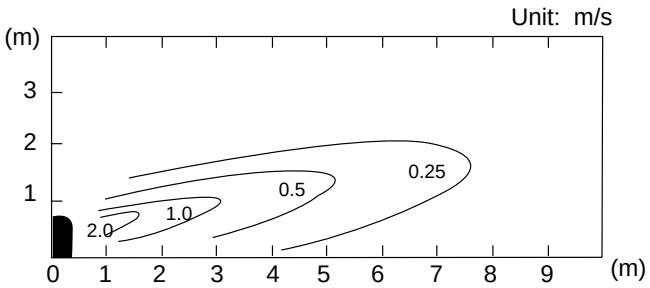

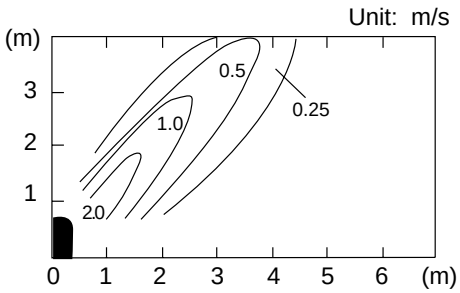

SIDE VIEW
VERTICAL : Center
HORIZONTAL : Center

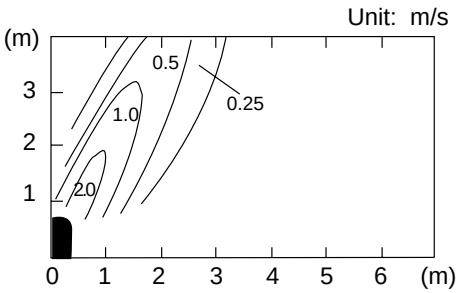

SIDE VIEW
VERTICAL : Upward
HORIZONTAL : Center

INDOOR UNIT

■MODELS : AB∗A12, AB∗A14 (UNDER CEILING)

Condition
Fan speed : High
Operation mode : Fan
Voltage : 230V

TOP VIEW
VERTICAL : Upward
HORIZONTAL : Center

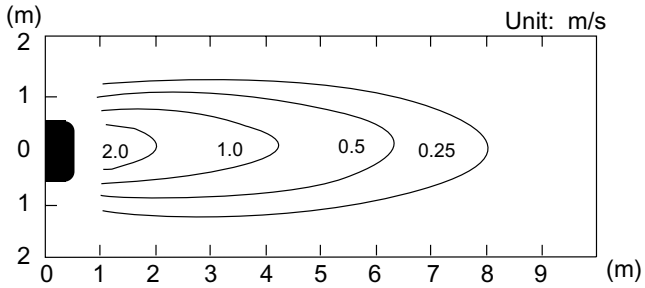

TOP VIEW
VERTICAL : Upward
HORIZONTAL : Right & Left

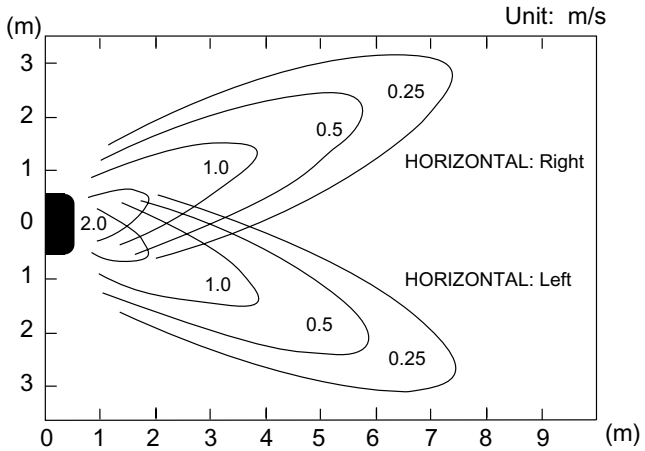

SIDE VIEW
VERTICAL : Upward
HORIZONTAL : Center

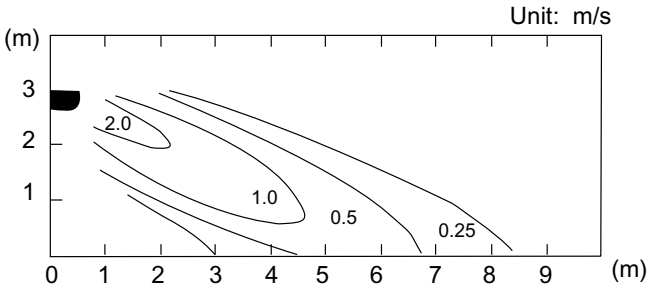

SIDE VIEW
VERTICAL : Center
HORIZONTAL : Center

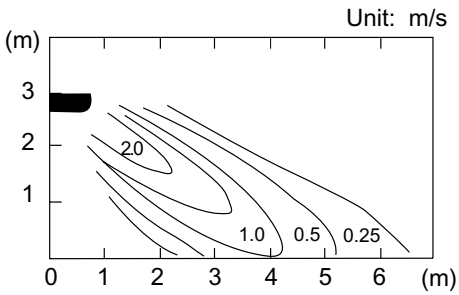

SIDE VIEW
VERTICAL : Downward
HORIZONTAL : Center

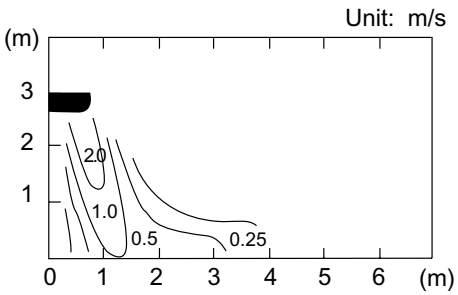

■MODEL : AB∗A18 (FLOOR CONSOLE)

Condition
Fan speed : High
Operation mode : Fan
Voltage : 230V

TOP VIEW
VERTICAL : Forward
HORIZONTAL : Center

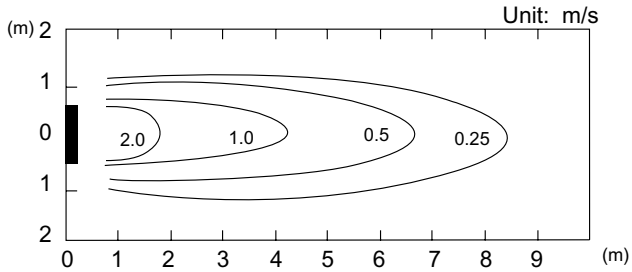

TOP VIEW
VERTICAL : Forward
HORIZONTAL : Right & Left

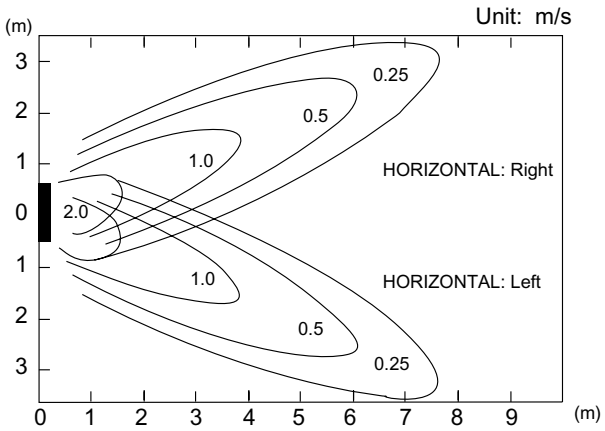

SIDE VIEW
VERTICAL : Forward
HORIZONTAL : Center

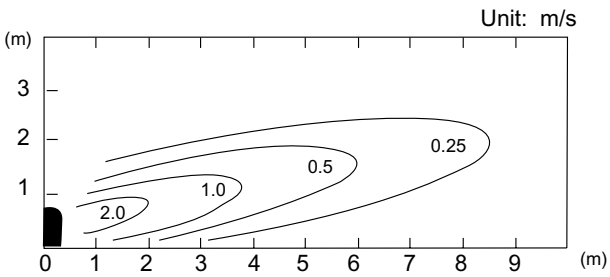

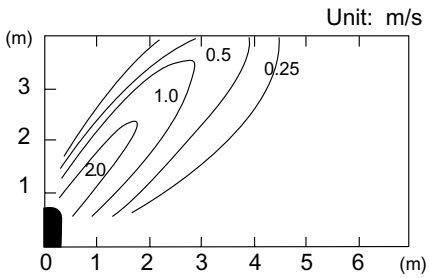

SIDE VIEW
VERTICAL : Center
HORIZONTAL : Center

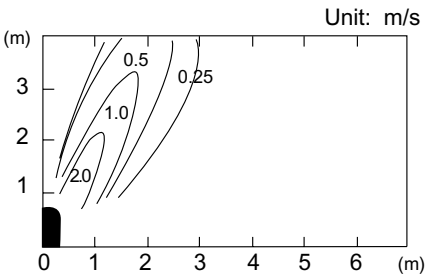

SIDE VIEW
VERTICAL : Up
HORIZONTAL : Center

INDOOR UNIT

■MODEL : AB∗A18 (UNDER CEILING)

Condition
Fan speed : High
Operation mode : Fan
Voltage : 230V

TOP VIEW
VERTICAL : Up
HORIZONTAL : Center

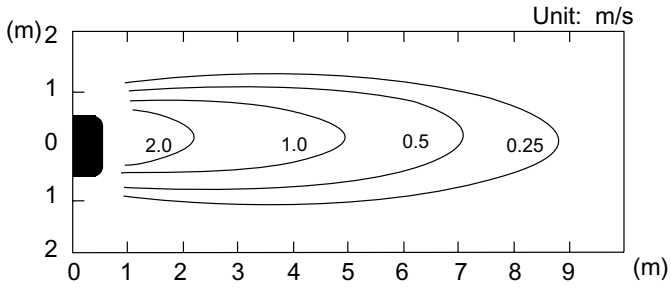

TOP VIEW
VERTICAL : Up
HORIZONTAL : Right & Left

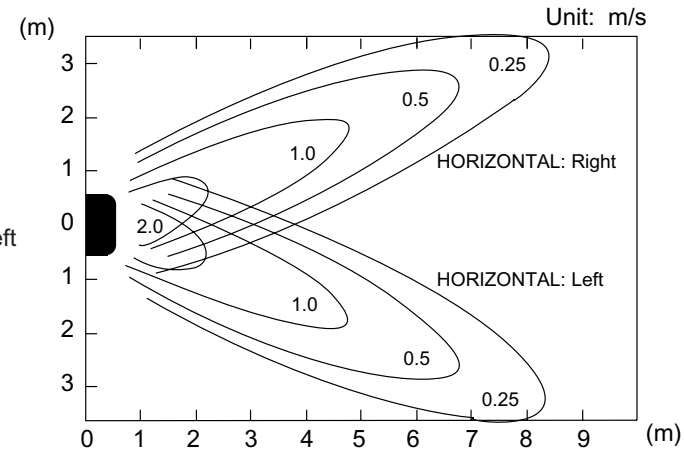

SIDE VIEW
VERTICAL : Forward
HORIZONTAL : Center

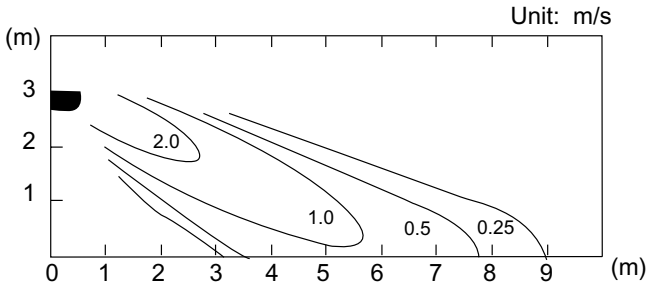

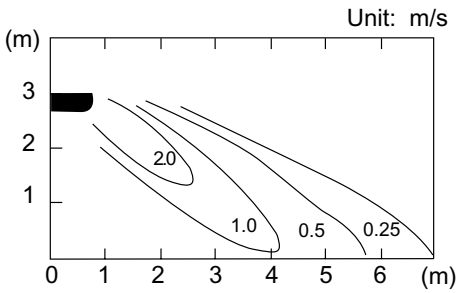

SIDE VIEW
VERTICAL : Center
HORIZONTAL : Center

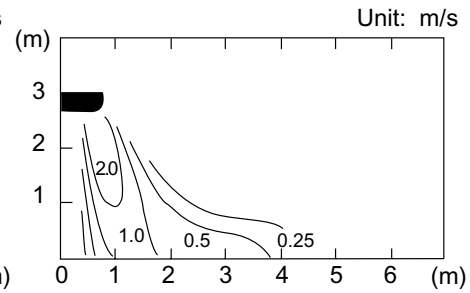

SIDE VIEW
VERTICAL : Down
HORIZONTAL : Center

INDOOR UNIT

■MODEL : AB∗A24 (FLOOR CONSOLE)

Condition
Fan speed : High
Operation mode : Fan
Voltage : 230V

TOP VIEW
VERTICAL : Forward
HORIZONTAL : Center

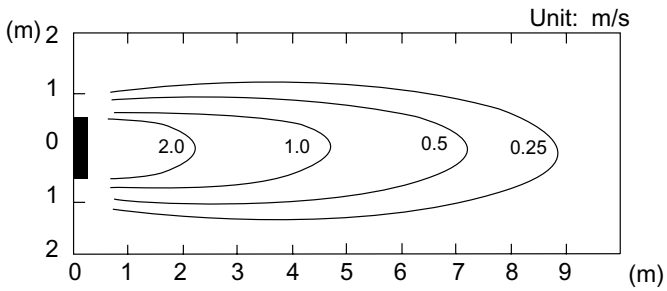

TOP VIEW
VERTICAL : Forward
HORIZONTAL : Right & Left

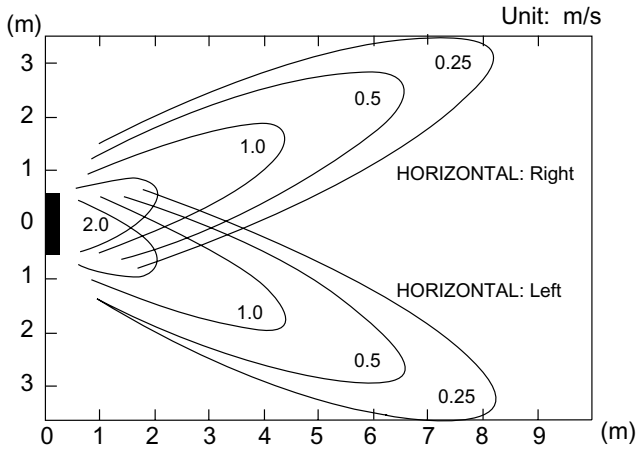

SIDE VIEW
VERTICAL : Forward
HORIZONTAL : Center

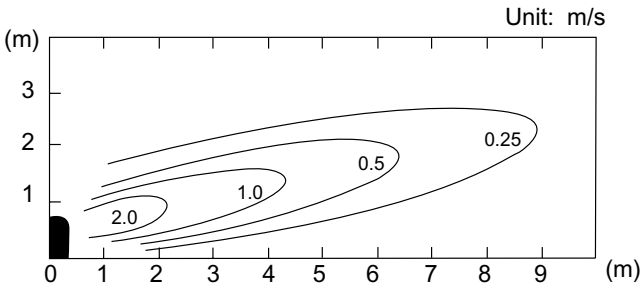

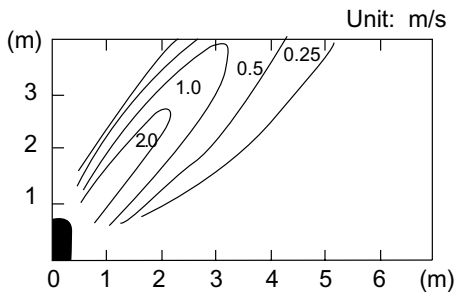

SIDE VIEW
VERTICAL : Center
HORIZONTAL : Center

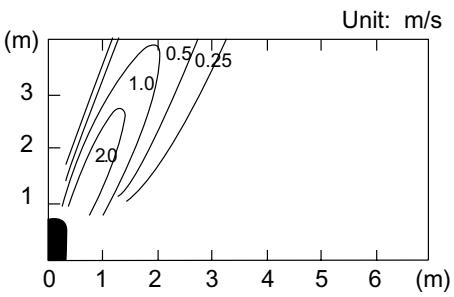

SIDE VIEW
VERTICAL : Up
HORIZONTAL : Center

INDOOR UNIT

■MODEL : AB∗A24 (UNDER CEILING)

Condition
Fan speed : High
Operation mode : Fan
Voltage : 230V

TOP VIEW
VERTICAL : Up
HORIZONTAL : Center

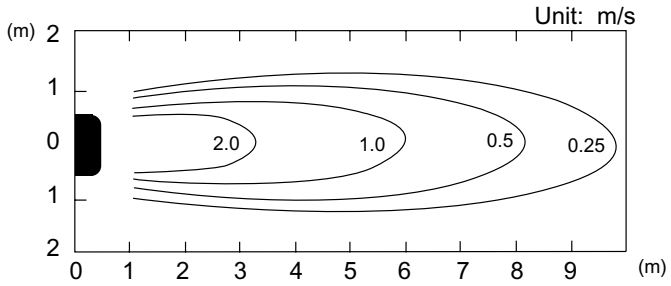

TOP VIEW
VERTICAL : Up
HORIZONTAL : Right & Left

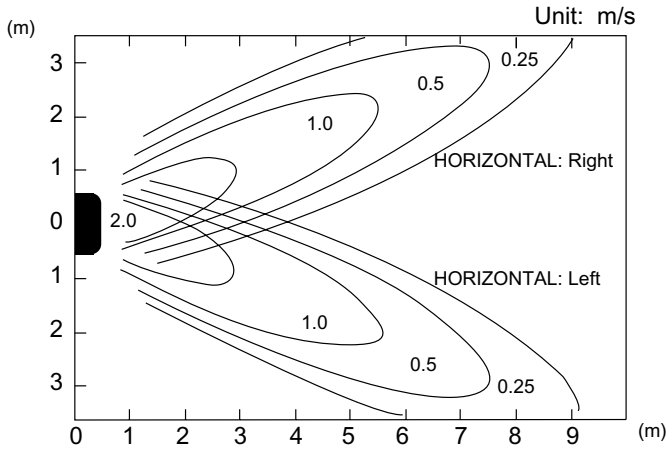

SIDE VIEW
VERTICAL : Up
HORIZONTAL : Center

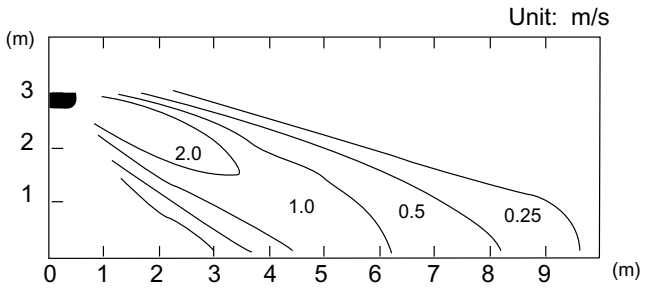

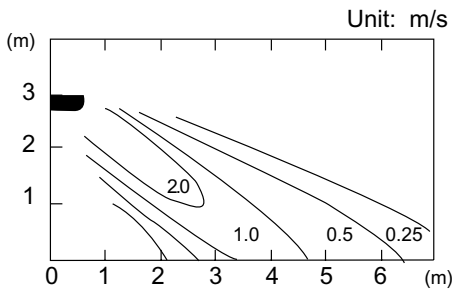

SIDE VIEW
VERTICAL : Center
HORIZONTAL : Center

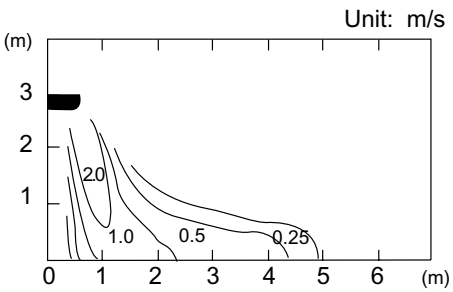

SIDE VIEW
VERTICAL : Down
HORIZONTAL : Center

INDOOR UNIT

4-7-4. CEILING TYPE

■MODEL : AB∗A30

Condition
Fan speed : High
Operation mode : Fan
Voltage : 230V

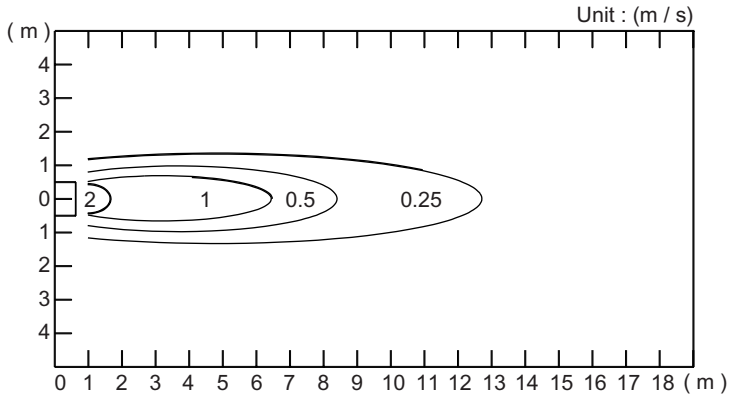

TOP VIEW
VERTICAL : UP
HORIZONTAL : CENTER

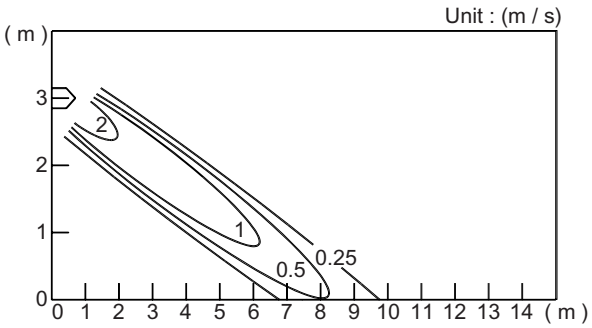

SIDE VIEW
FLAP : CENTER
HORIZONTAL : CENTER

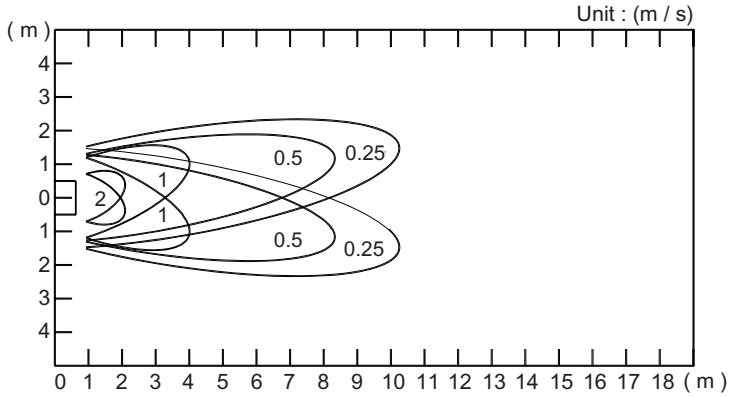

TOP VIEW
VERTICAL : UP
HORIZONTAL : RIGHT AND LEFT

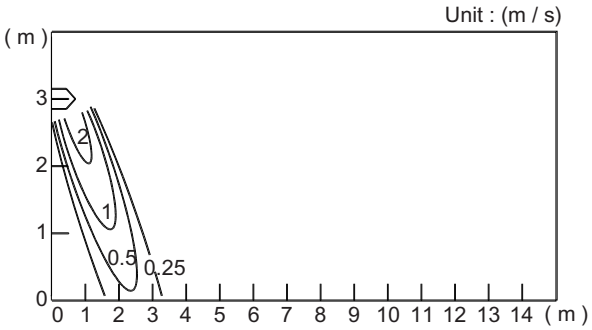

SIDE VIEW
FLAP : DOWN
HORIZONTAL : CENTER

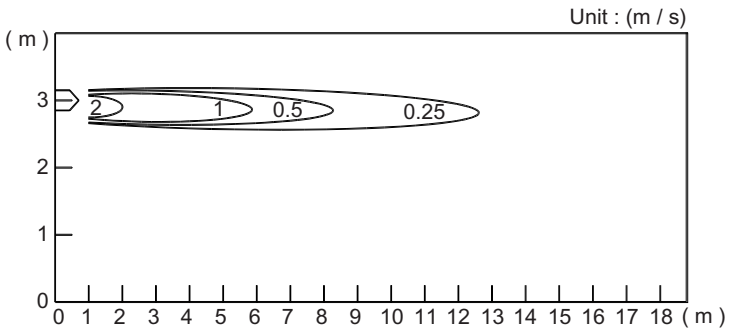

SIDE VIEW
FLAP : UP
HORIZONTAL : CENTER

INDOOR UNIT

■MODEL : AB*A36

Condition
Fan speed : High
Operation mode : Fan
Voltage : 230V

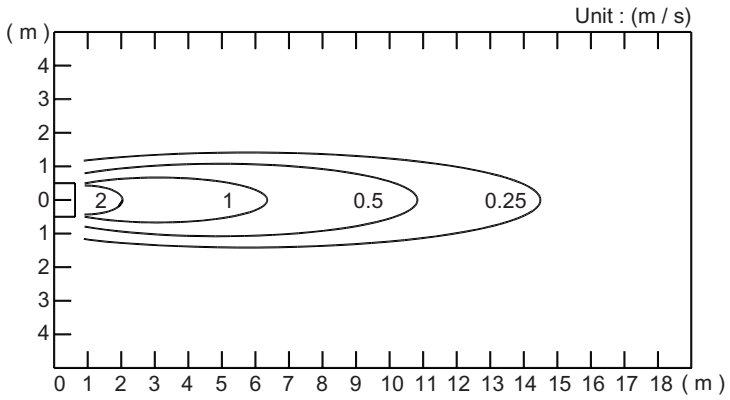

TOP VIEW
VERTICAL : UP
HORIZONTAL : CENTER

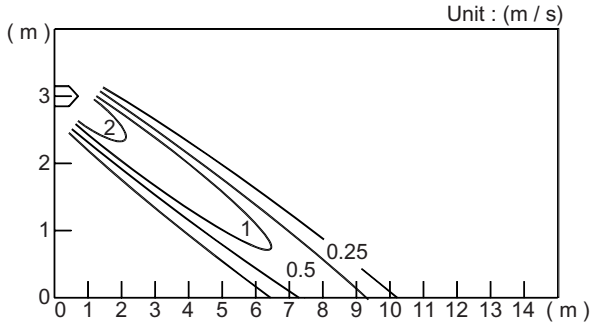

SIDE VIEW
FLAP : CENTER
HORIZONTAL : CENTER

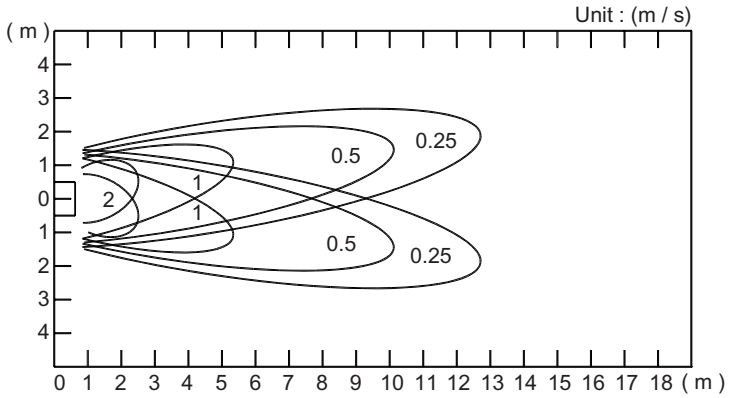

TOP VIEW
VERTICAL : UP
HORIZONTAL : RIGHT AND LEFT

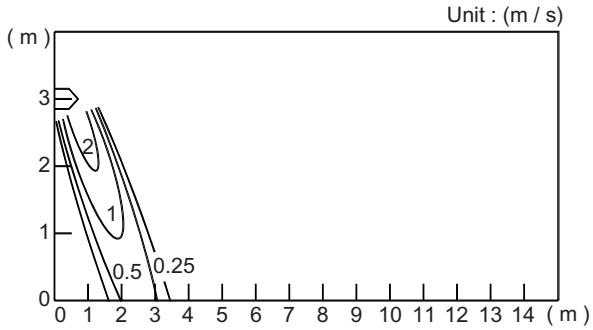

SIDE VIEW
FLAP : DOWN
HORIZONTAL : CENTER

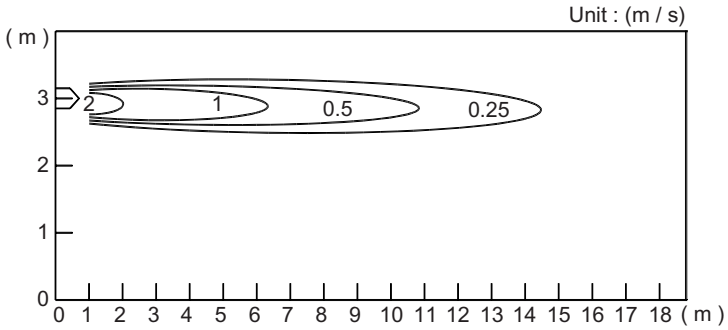

SIDE VIEW
FLAP : UP
HORIZONTAL : CENTER

INDOOR UNIT

INDOOR UNIT

■MODEL : AB*A45

Condition
Fan speed : High
Operation mode : Fan
Voltage : 230V

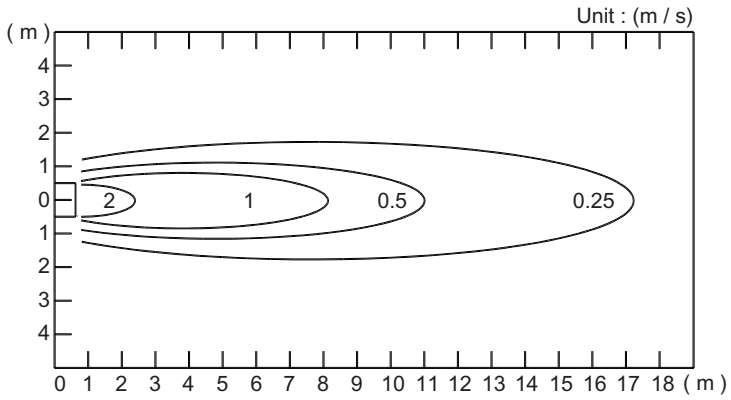

TOP VIEW
VERTICAL : UP
HORIZONTAL : CENTER

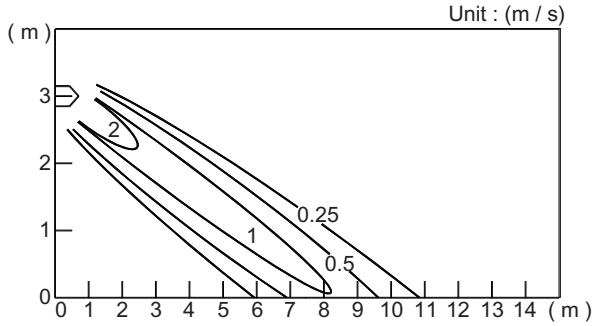

SIDE VIEW
FLAP : CENTER
HORIZONTAL : CENTER

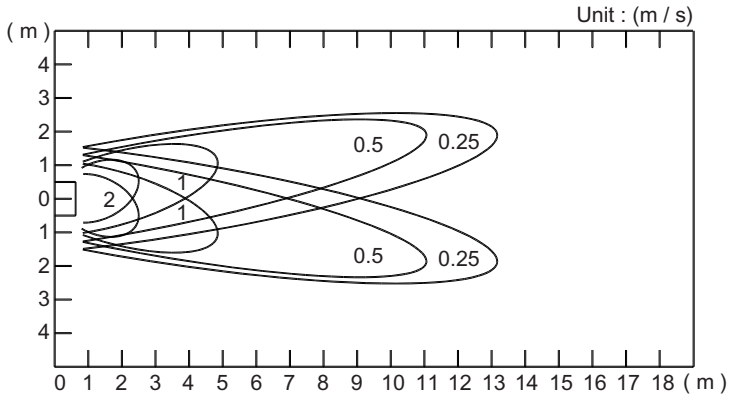

TOP VIEW
VERTICAL : UP
HORIZONTAL : RIGHT AND LEFT

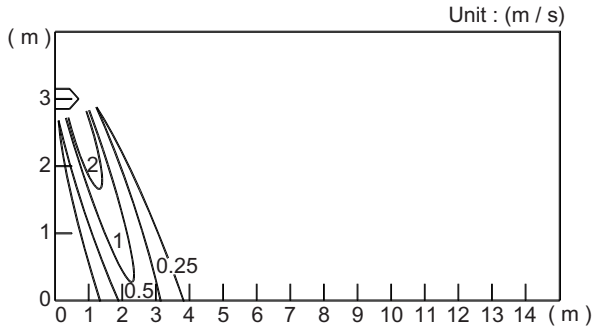

SIDE VIEW
FLAP : DOWN
HORIZONTAL : CENTER

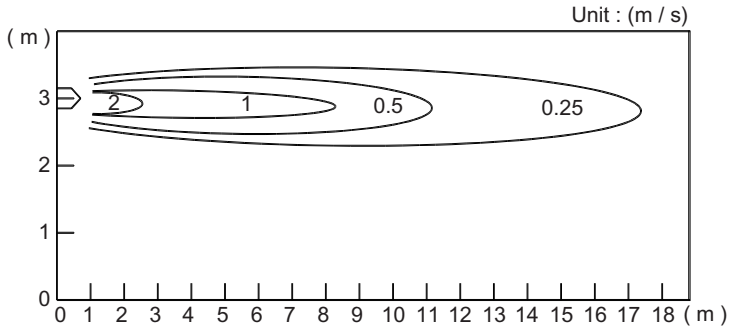

SIDE VIEW
FLAP : UP
HORIZONTAL : CENTER

INDOOR UNIT

■MODEL : AB∗A54

Condition
Fan speed : High
Operation mode : Fan
Voltage : 230V

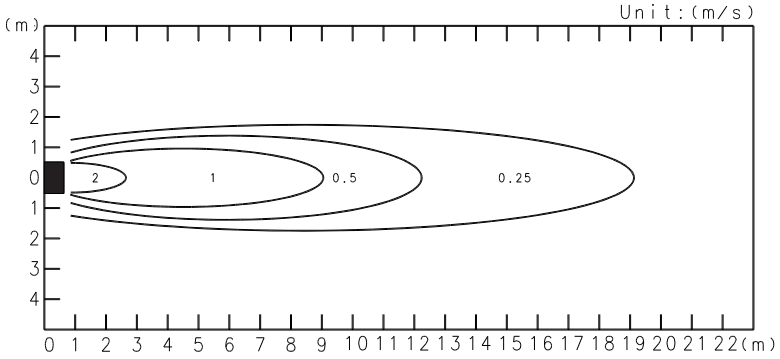

TOP VIEW
VERTICAL : UP
HORIZONTAL : CENTER

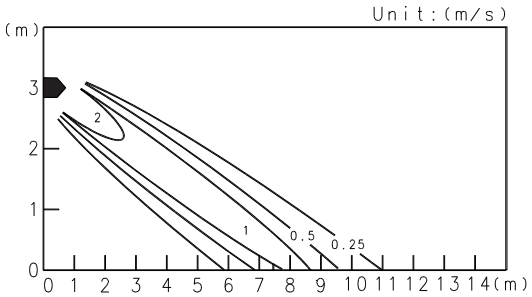

SIDE VIEW
FLAP : CENTER
HORIZONTAL : CENTER

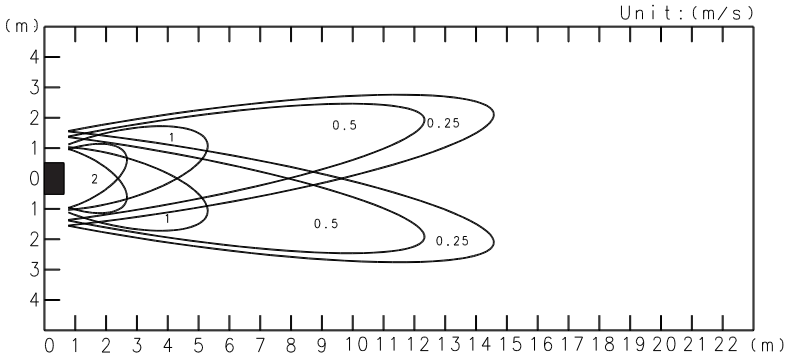

TOP VIEW
VERTICAL : UP
HORIZONTAL : RIGHT AND LEFT

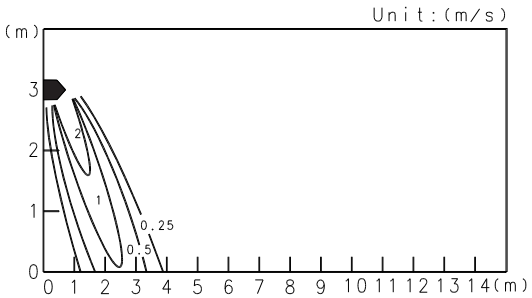

SIDE VIEW
FLAP : DOWN
HORIZONTAL : CENTER

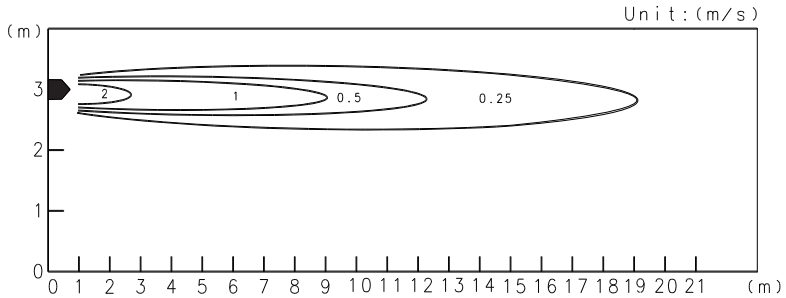

SIDE VIEW
FLAP : UP
HORIZONTAL : CENTER

INDOOR UNIT

4-7-5. COMPACT WALL MOUNTED TYPE (Comfort model)

■MODELS : AS∗E07, AS∗E09

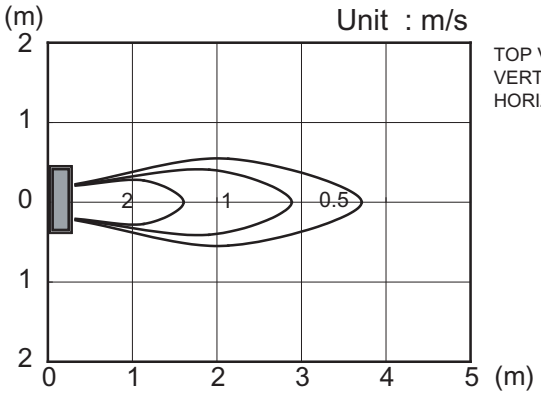

TOP VIEW
VERTICAL FLAP : Horiz.
HORIZONTAL FLAP : Center

Condition
Fan speed : High
Operation mode : Fan
Voltage : 230V

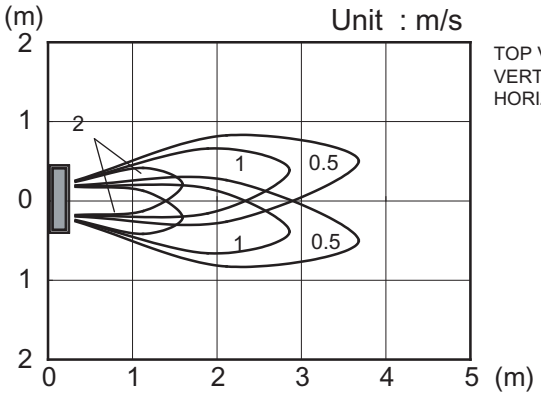

TOP VIEW
VERTICAL FLAP : Horiz.
HORIZONTAL FLAP : Right & Left

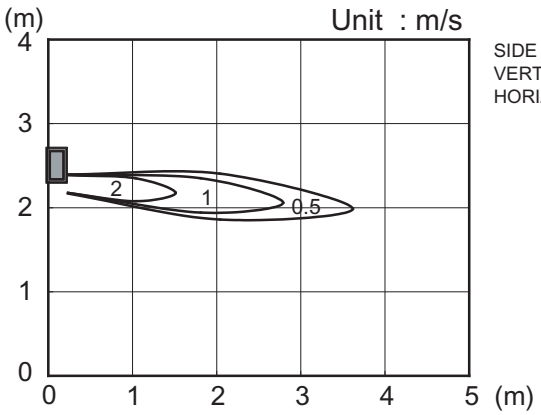

SIDE VIEW
VERTICAL FLAP : Horiz.
HORIZONTAL FLAP : Center

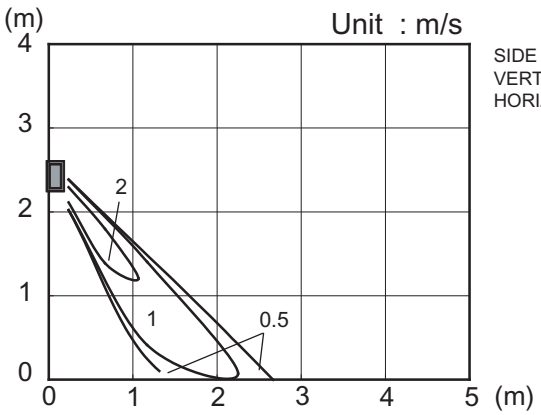

SIDE VIEW
VERTICAL FLAP : Vert.
HORIZONTAL FLAP : Center

INDOOR UNIT

■MODEL : AS*E12

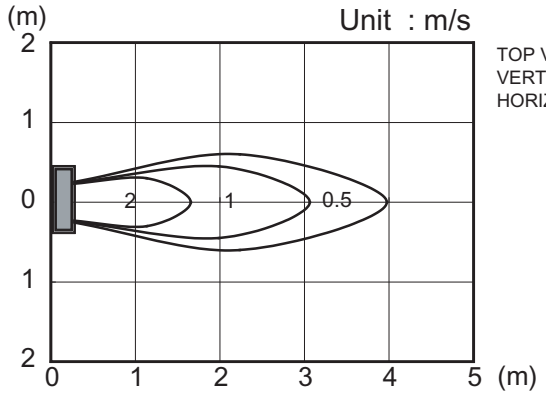

TOP VIEW
VERTICAL FLAP : Horiz.
HORIZONTAL FLAP : Center

Condition
Fan speed : High
Operation mode : Fan
Voltage : 230V

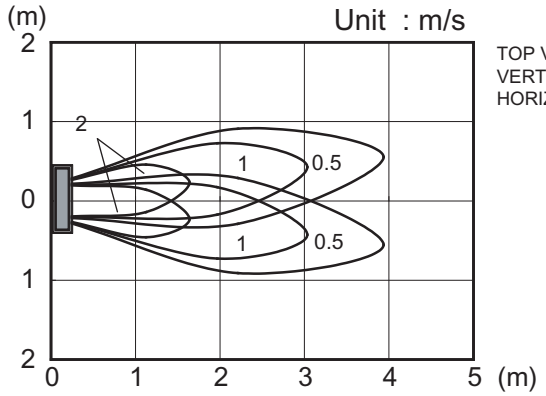

TOP VIEW
VERTICAL FLAP : Horiz.
HORIZONTAL FLAP : Right & Left

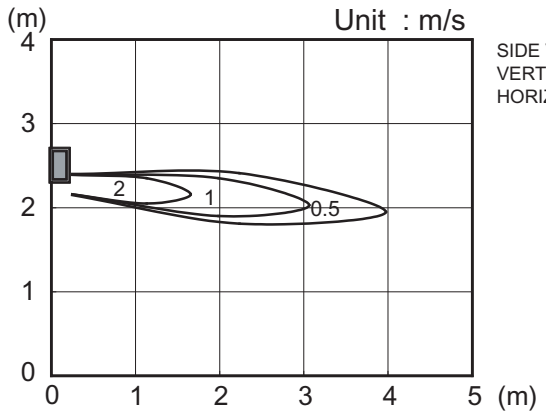

SIDE VIEW
VERTICAL FLAP : Horiz.
HORIZONTAL FLAP : Center

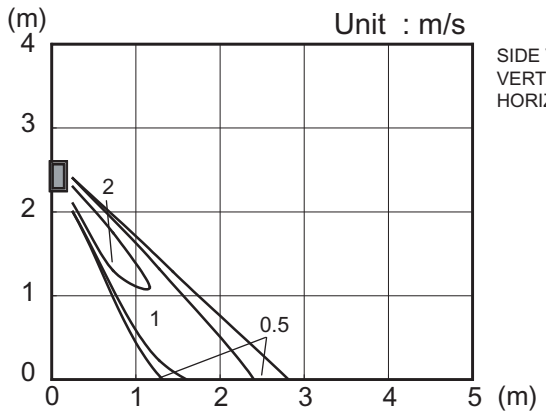

SIDE VIEW
VERTICAL FLAP : Vert.
HORIZONTAL FLAP : Center

INDOOR UNIT

■MODEL : AS∗E14

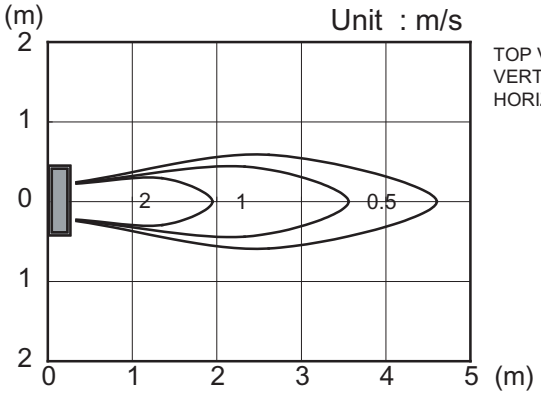

TOP VIEW
VERTICAL FLAP : Horiz.
HORIZONTAL FLAP : Center

Condition
Fan speed : High
Operation mode : Fan
Voltage : 230V

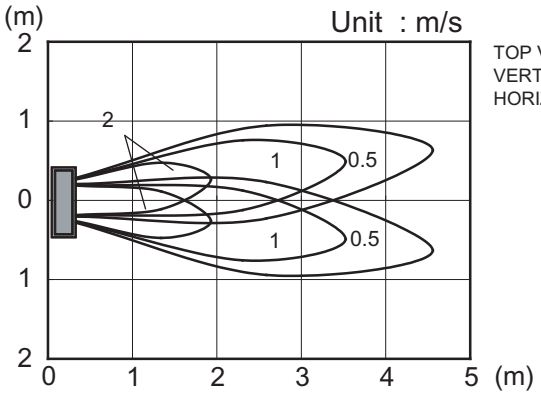

TOP VIEW
VERTICAL FLAP : Horiz.
HORIZONTAL FLAP : Right & Left

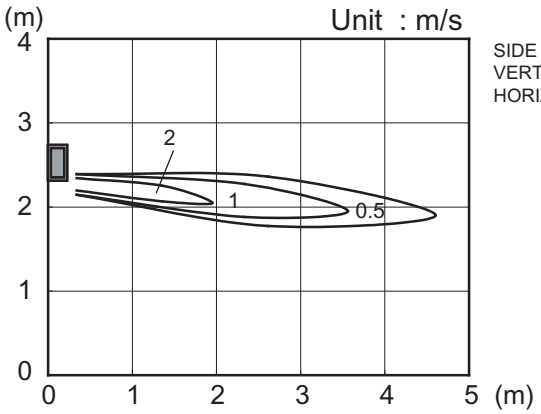

SIDE VIEW
VERTICAL FLAP : Horiz.
HORIZONTAL FLAP : Center

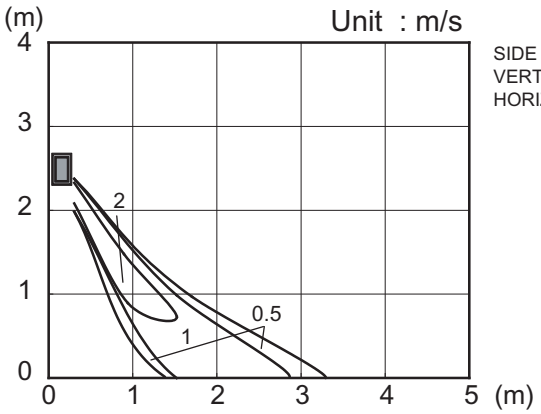

SIDE VIEW
VERTICAL FLAP : Vert.
HORIZONTAL FLAP : Center

INDOOR UNIT

4-7-6. WALL MOUNTED TYPE

■ MODEL : AS*A18

Condition
Fan speed : High
Operation mode : Fan
Voltage : 230V

TOP VIEW
FLOW CONTROL PANEL : Horiz.
LOUVER : Center

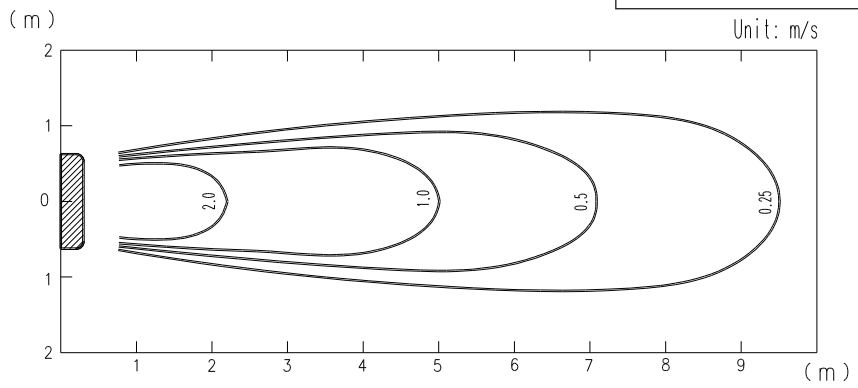

TOP VIEW
FLOW CONTROL PANEL : Horiz.
LOUVER : Right & Left

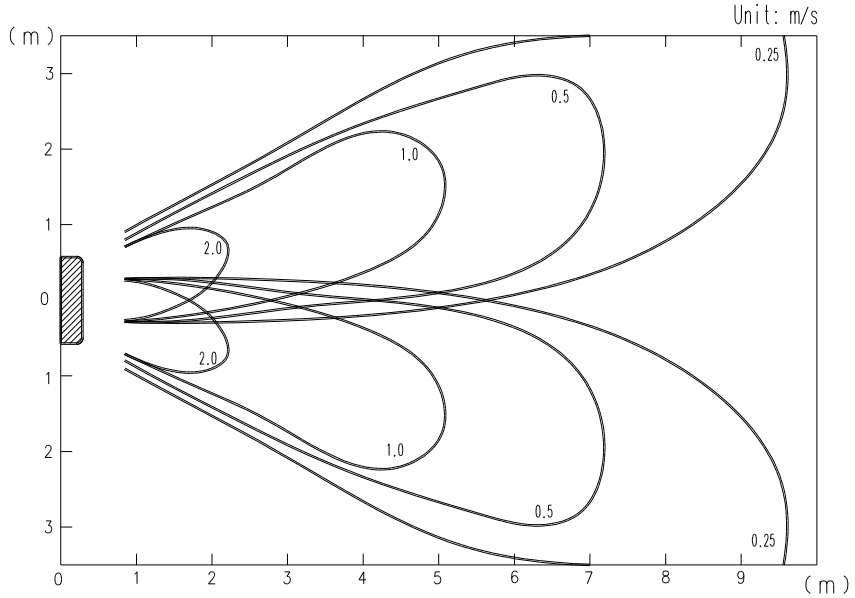

SIDE VIEW
FRONT CONTROL PANEL : Horiz.
LOUVER : Center

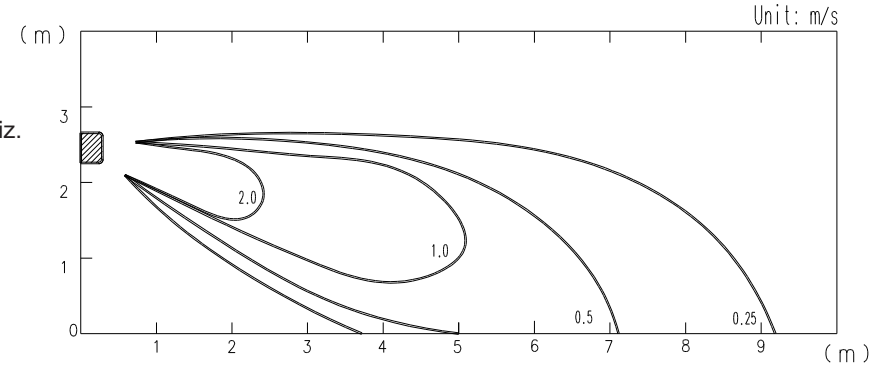

SIDE VIEW
FLOW CONTROL PANEL : Vert.
LOUVER : Center

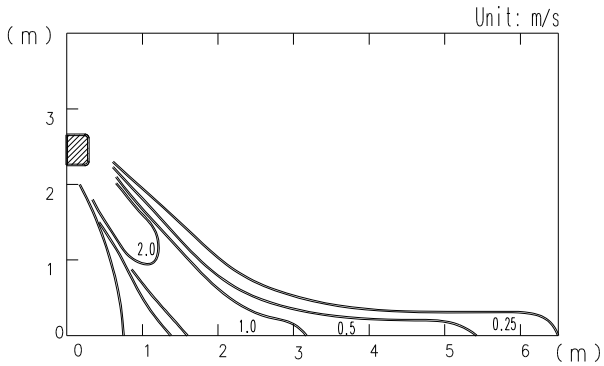

INDOOR UNIT

INDOOR UNIT

■ MODEL : AS*A24

Condition
Fan speed : High
Operation mode : Fan
Voltage : 230V

TOP VIEW
FLOW CONTROL PANEL : Horiz.
LOUVER : Center

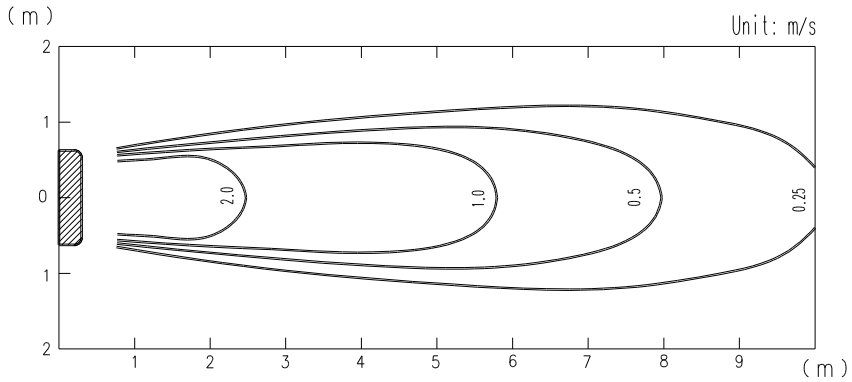

TOP VIEW
FLOW CONTROL PANEL : Horiz.
LOUVER : Right & Left

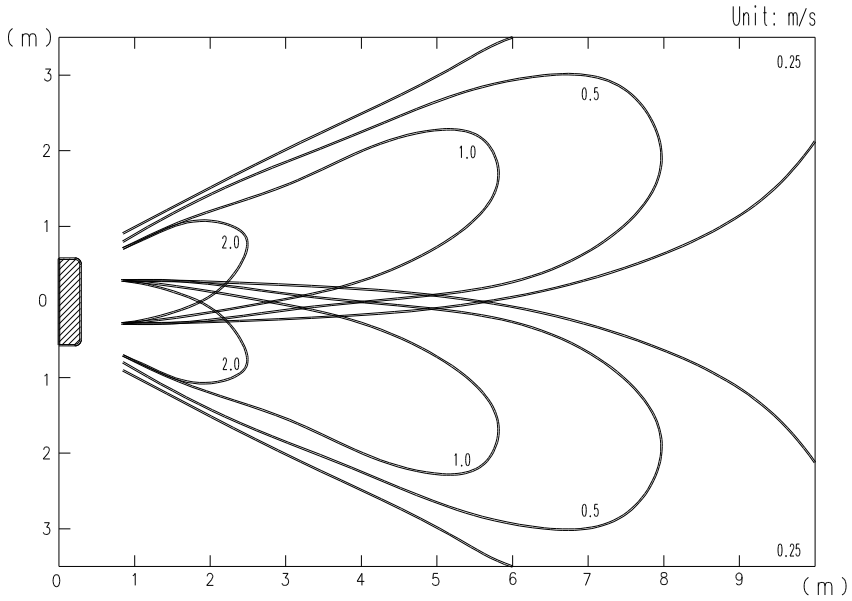

SIDE VIEW
FRONT CONTROL PANEL : Horiz.
LOUVER : Center

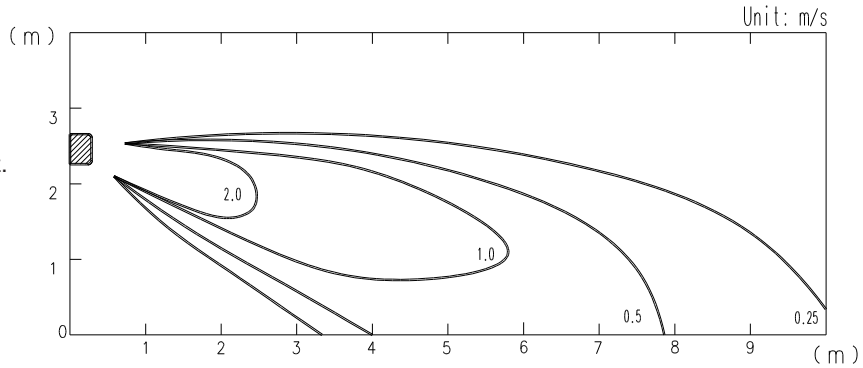

SIDE VIEW
FLOW CONTROL PANEL : Vert.
LOUVER : Center

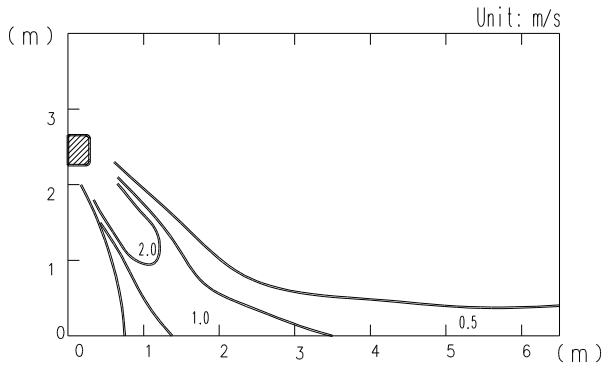

■ MODEL : AS∗A30

Condition
Fan speed : High
Operation mode : Fan
Voltage : 230V

TOP VIEW
FLOW CONTROL PANEL : Horiz.
LOUVER : Center

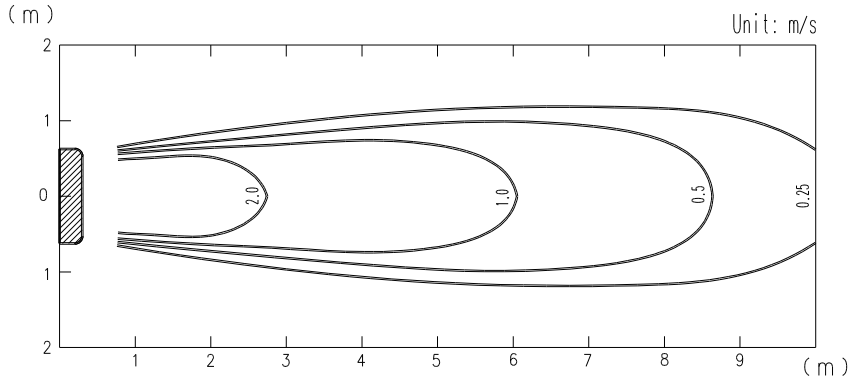

TOP VIEW
FLOW CONTROL PANEL : Horiz.
LOUVER : Right & Left

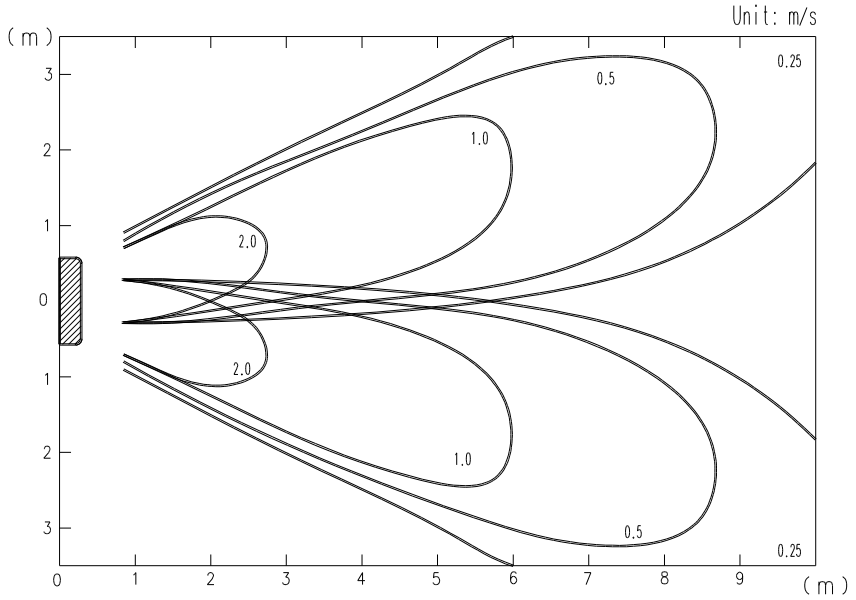

SIDE VIEW
FRONT CONTROL PANEL : Horiz.
LOUVER : Center

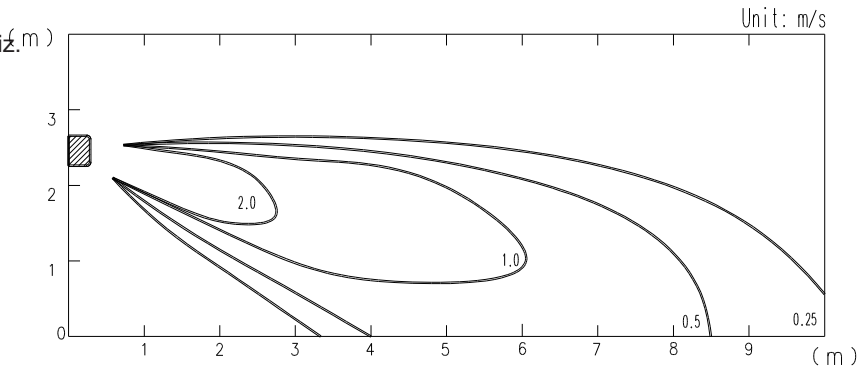

SIDE VIEW
FLOW CONTROL PANEL : Vert.
LOUVER : Center

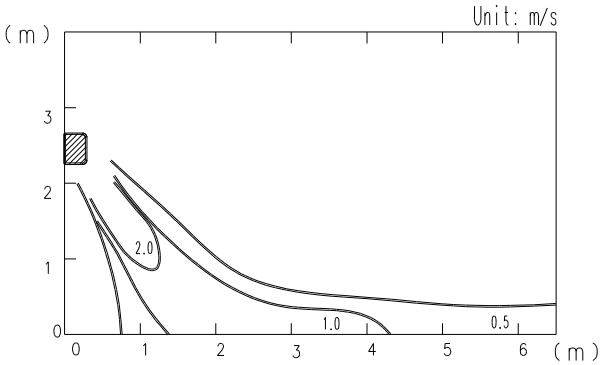

INDOOR UNIT

4-7-7. CEILING WALL TYPE

■ MODEL : AW*A07

Condition
Fan speed : High
Operation mode : Fan
Voltage : 230V

TOP VIEW
FLOW CONTROL PANEL : Horiz.
LOUVER : Center

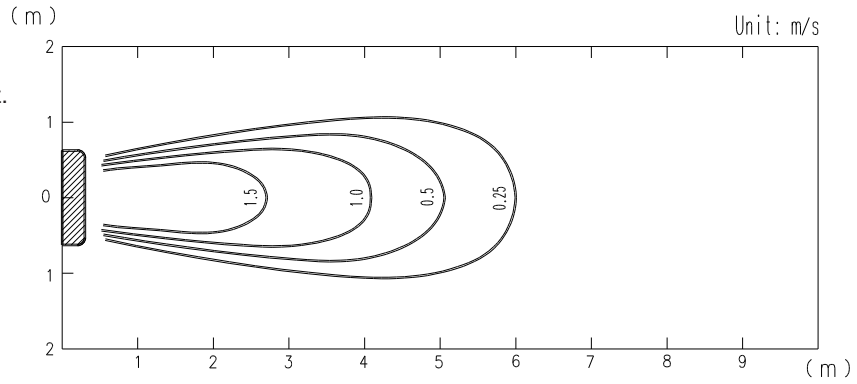

TOP VIEW
FLOW CONTROL PANEL : Horiz.
LOUVER : Right & Left

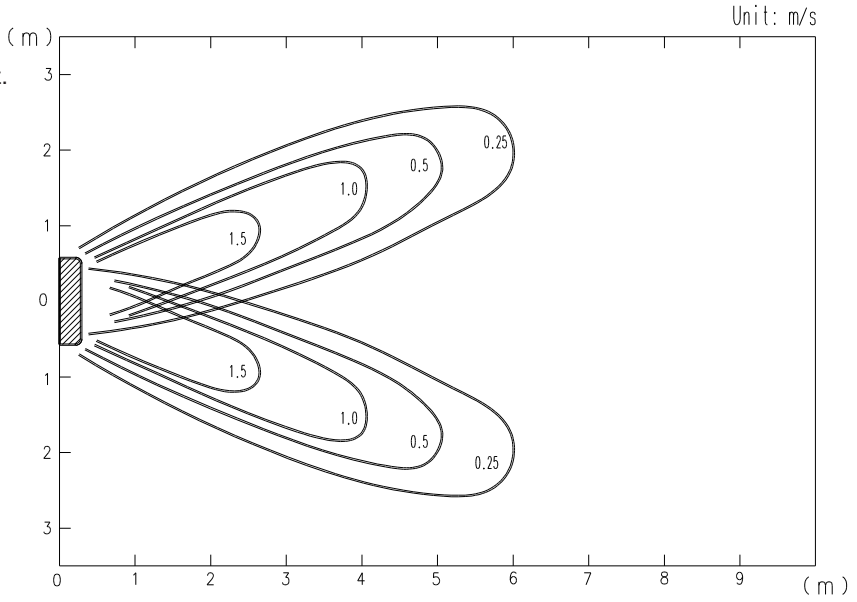

SIDE VIEW
FLOW CONTROL PANEL : Horiz.
LOUVER : Center

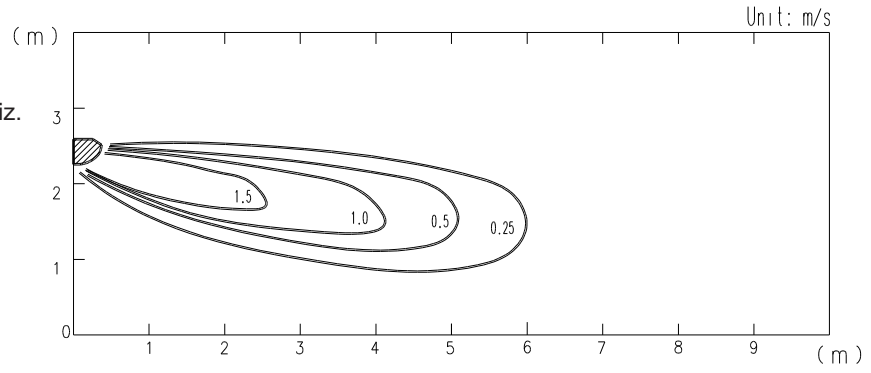

SIDE VIEW
FLOW CONTROL PANEL : Vert.
LOUVER : Center

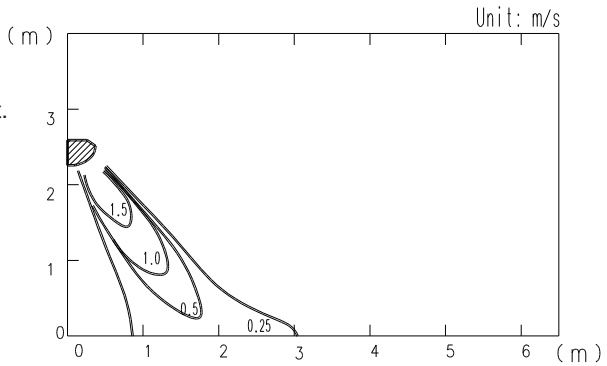

INDOOR UNIT

INDOOR UNIT

■ MODEL : AW*A09

Condition
Fan speed : High
Operation mode : Fan
Voltage : 230V

TOP VIEW
FLOW CONTROL PANEL : Horiz.
LOUVER : Center

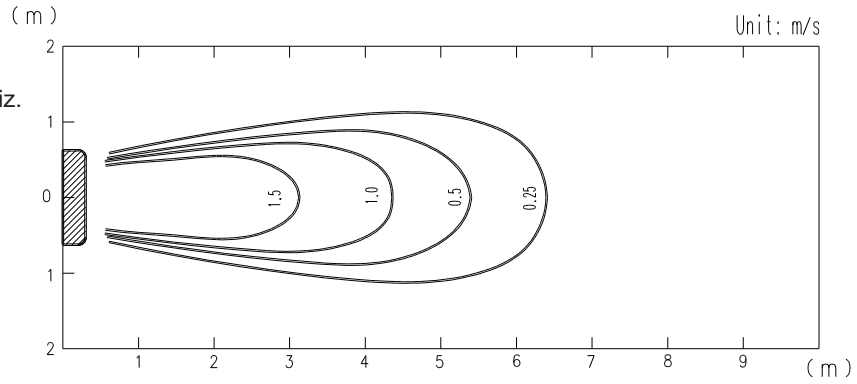

TOP VIEW
FLOW CONTROL PANEL : Horiz.
LOUVER : Right & Left

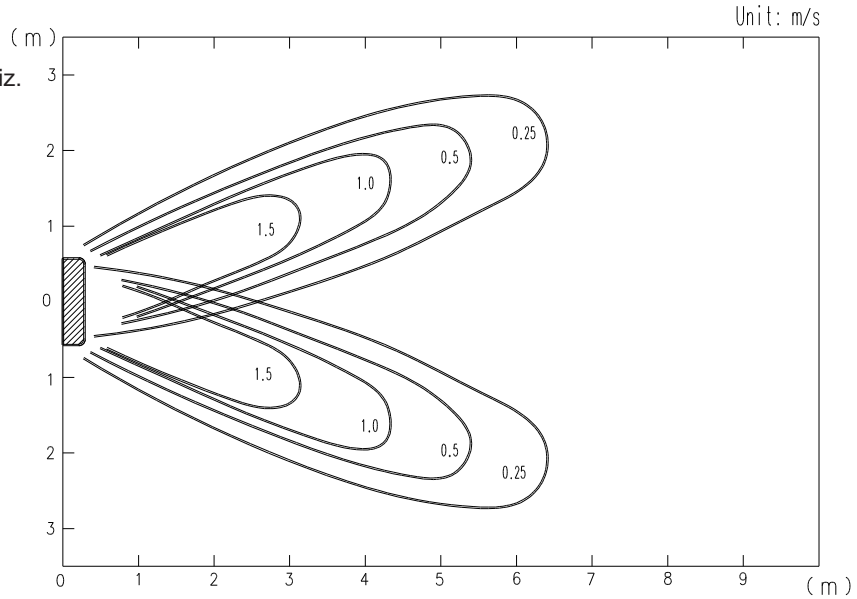

SIDE VIEW
FLOW CONTROL PANEL : Horiz.
LOUVER : Center

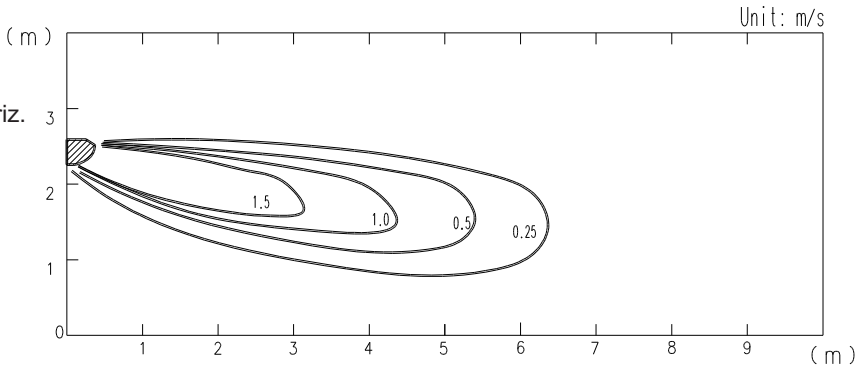

SIDE VIEW
FLOW CONTROL PANEL : Vert.
LOUVER : Center

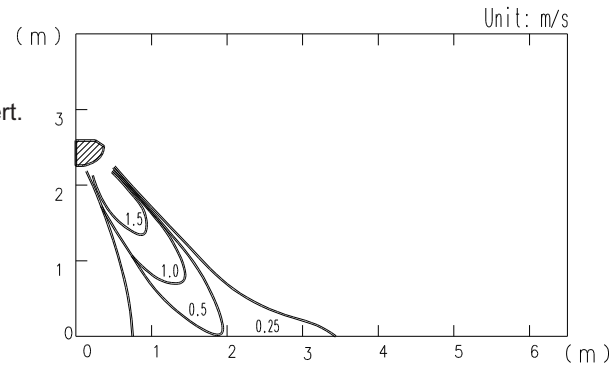

INDOOR UNIT

■ MODEL : AW*A12

Condition
Fan speed : High
Operation mode : Fan
Voltage : 230V

TOP VIEW
FLOW CONTROL PANEL : Horiz.
LOUVER : Center

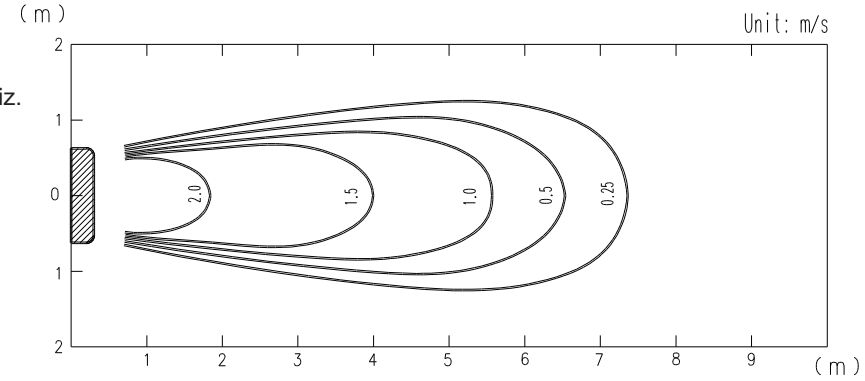

TOP VIEW
FLOW CONTROL PANEL : Horiz.
LOUVER : Right & Left

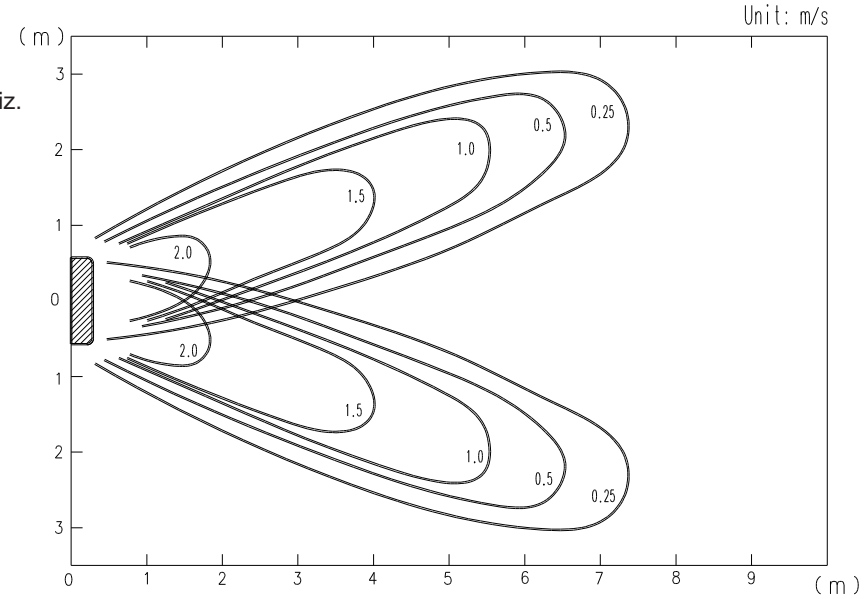

SIDE VIEW
FLOW CONTROL PANEL : Horiz.
LOUVER : Center

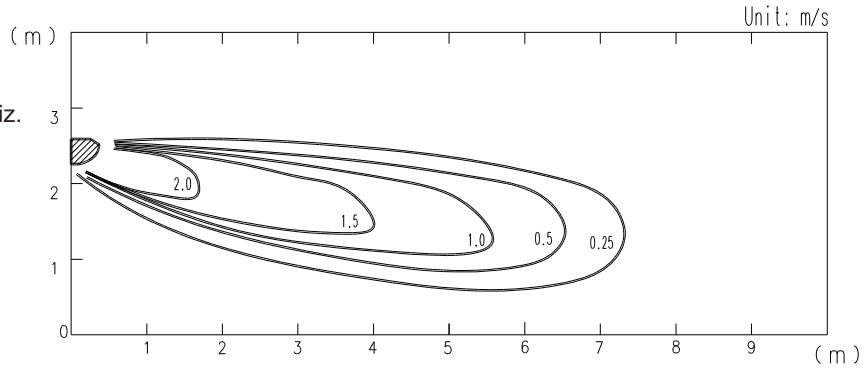

SIDE VIEW
FLOW CONTROL PANEL : Vert.
LOUVER : Center

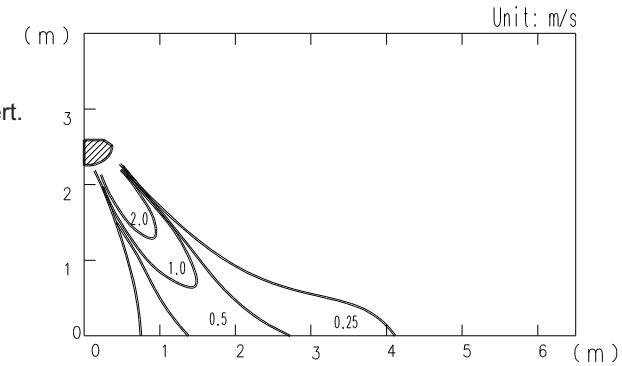

INDOOR UNIT

■ MODEL : AW*A14

Condition
Fan speed : High
Operation mode : Fan
Voltage : 230V

TOP VIEW
FLOW CONTROL PANEL : Horiz.
LOUVER : Center

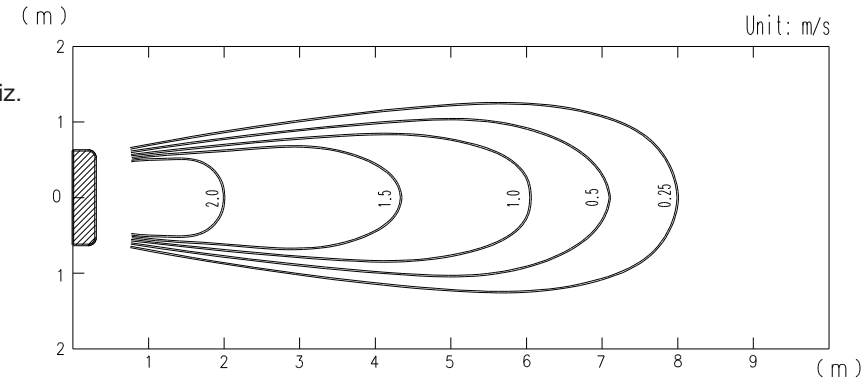

TOP VIEW
FLOW CONTROL PANEL : Horiz.
LOUVER : Right & Left

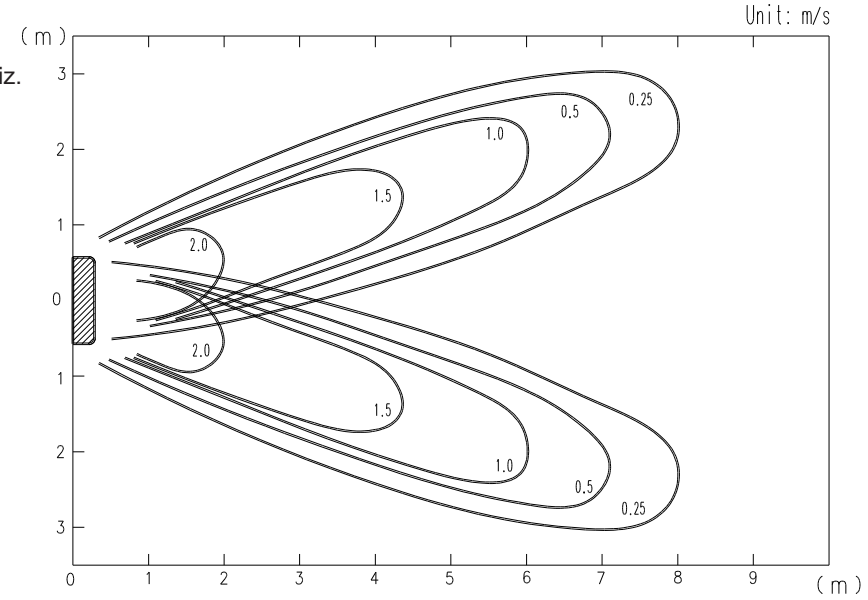

SIDE VIEW
FLOW CONTROL PANEL : Horiz.
LOUVER : Center

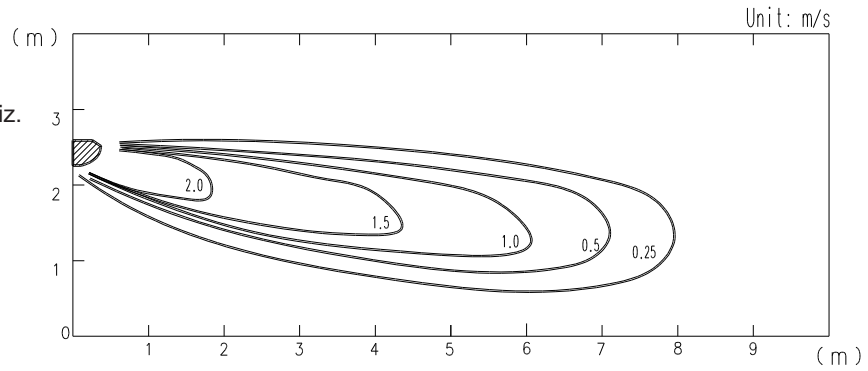

SIDE VIEW
FLOW CONTROL PANEL : Vert.
LOUVER : Center

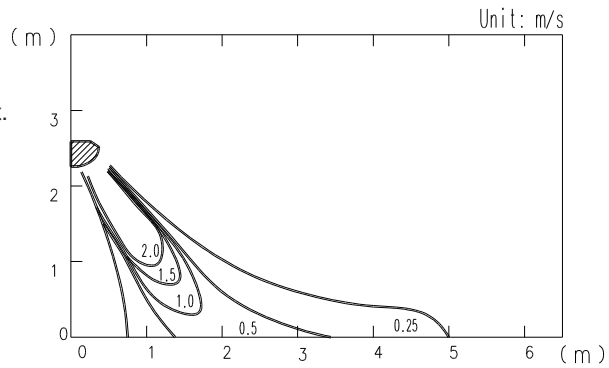

INDOOR UNIT

■ MODEL : AW*A18

Condition
Fan speed : High
Operation mode : Fan
Voltage : 230V

TOP VIEW
FLOW CONTROL PANEL : Horiz.
LOUVER : Center

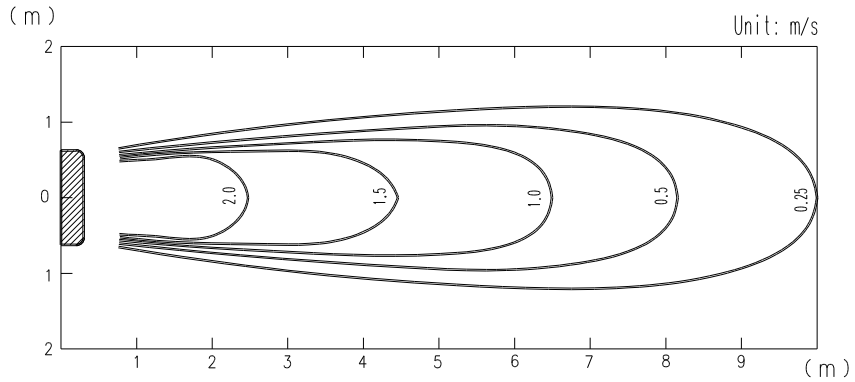

TOP VIEW
FLOW CONTROL PANEL : Horiz.
LOUVER : Right & Left

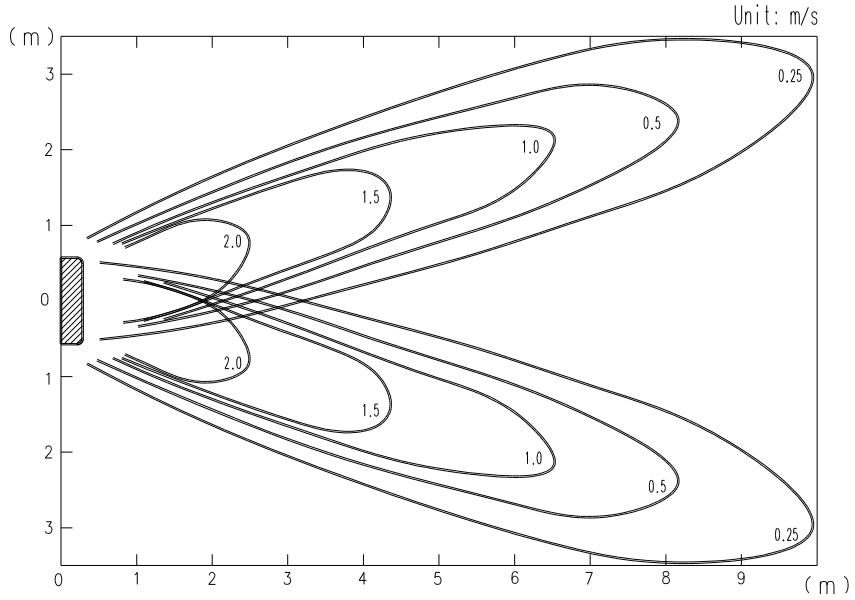

SIDE VIEW
FLOW CONTROL PANEL : Horiz.
LOUVER : Center

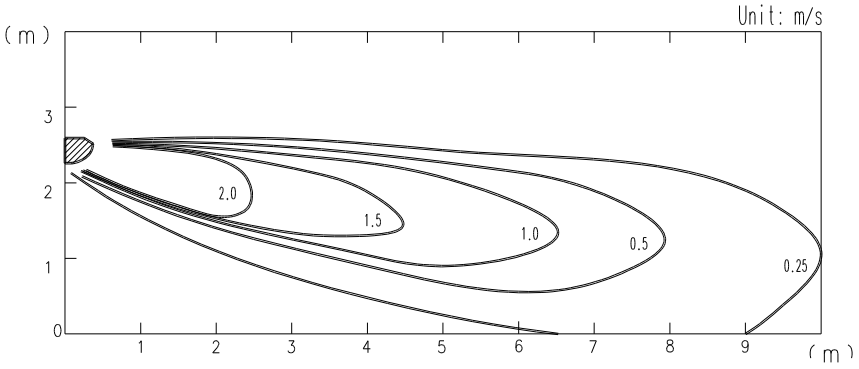

SIDE VIEW
FLOW CONTROL PANEL : Vert.
LOUVER : Center

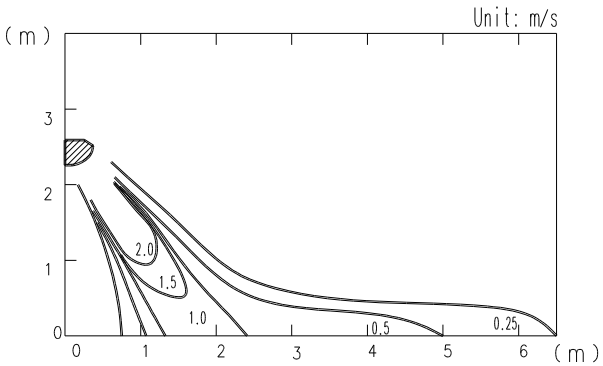

INDOOR UNIT

■ MODEL : AW*A24

Condition
Fan speed : High
Operation mode : Fan
Voltage : 230V

TOP VIEW
FLOW CONTROL PANEL : Horiz.
LOUVER : Center

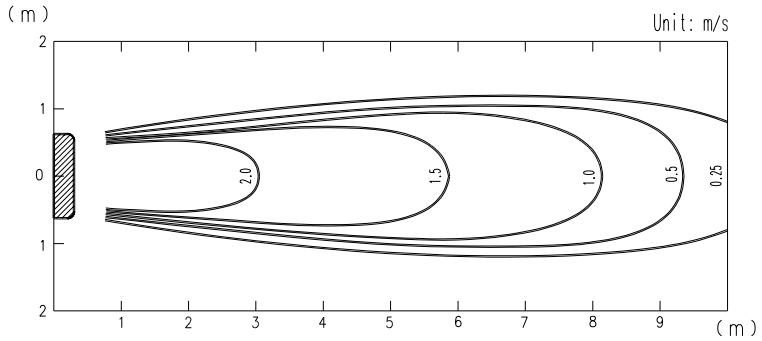

TOP VIEW
FLOW CONTROL PANEL : Horiz.
LOUVER : Right & Left

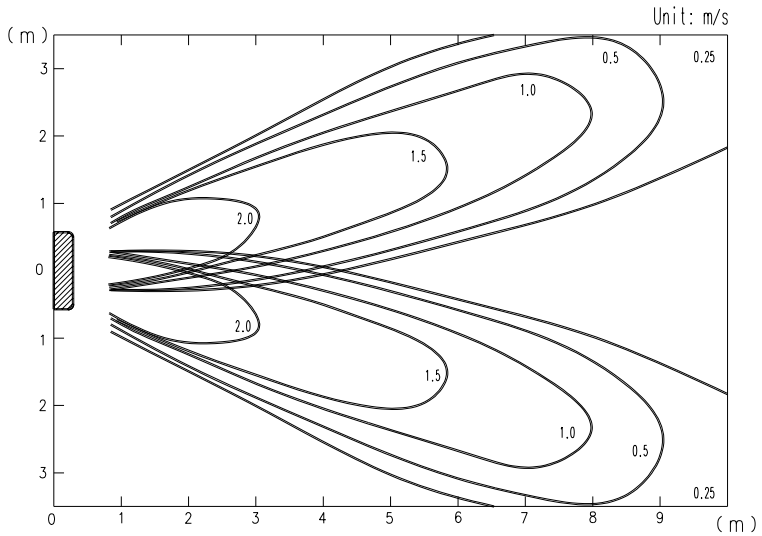

SIDE VIEW
FLOW CONTROL PANEL : Horiz.
LOUVER : Center

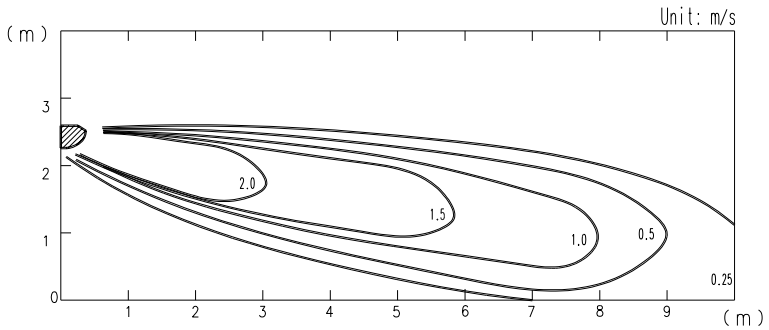

SIDE VIEW
FLOW CONTROL PANEL : Vert.
LOUVER : Center

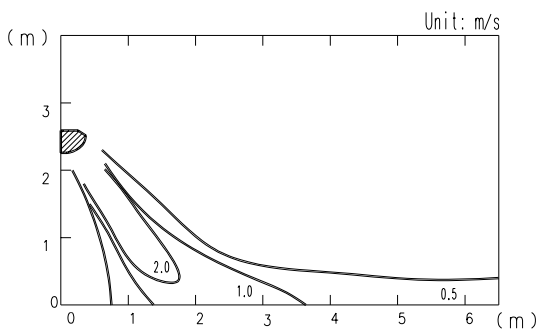

INDOOR UNIT

INDOOR UNIT

■ MODEL : AW*A30

Condition
Fan speed : High
Operation mode : Fan
Voltage : 230V

TOP VIEW
FLOW CONTROL PANEL : Horiz.
LOUVER : Center

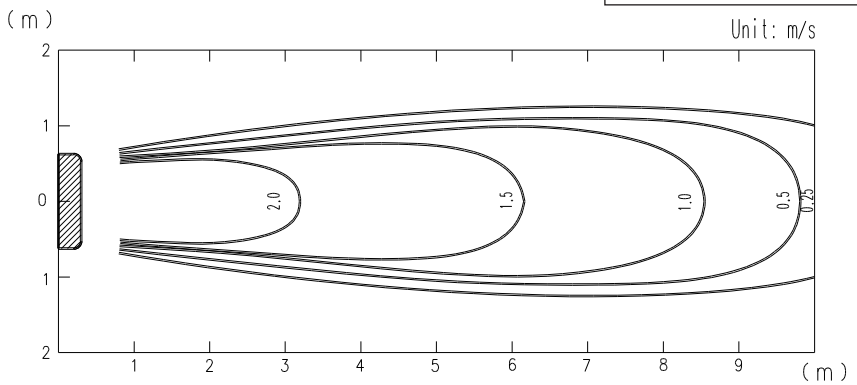

TOP VIEW
FLOW CONTROL PANEL : Horiz.
LOUVER : Right & Left

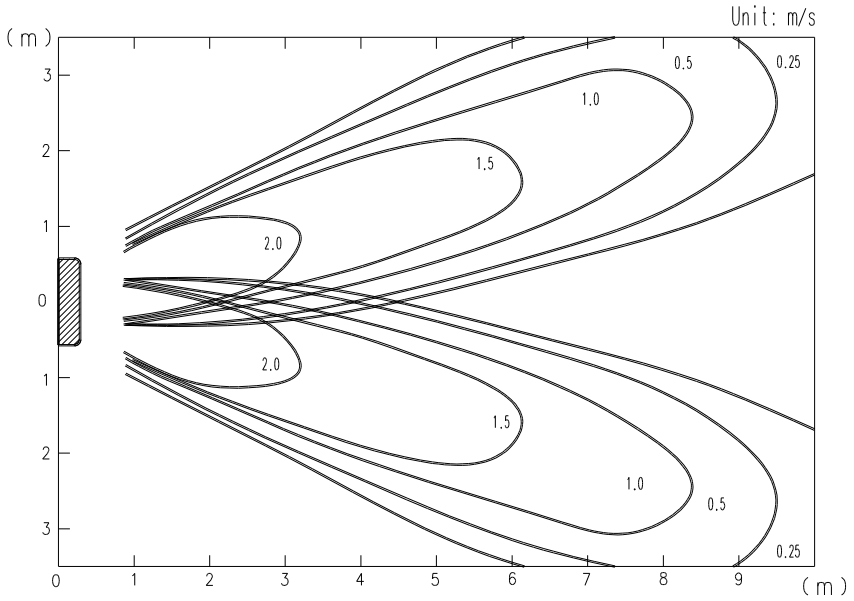

SIDE VIEW
FLOW CONTROL PANEL : Horiz.
LOUVER : Center

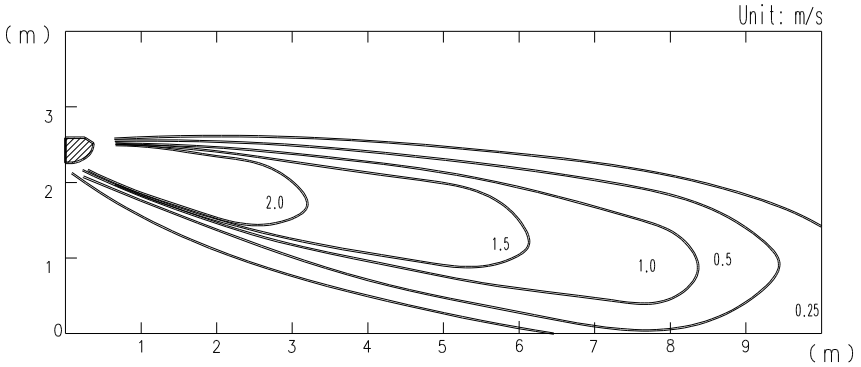

SIDE VIEW
FLOW CONTROL PANEL : Vert.
LOUVER : Center

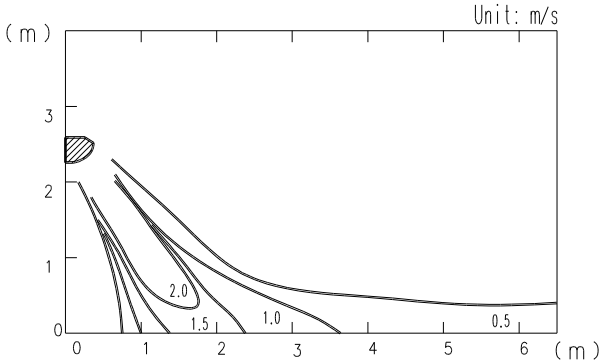

INDOOR UNIT

INDOOR UNIT

4-8. FAN PERFORMANCE CURVE

4-8-1. COMPACT DUCT TYPE

■MODEL : ARXB07

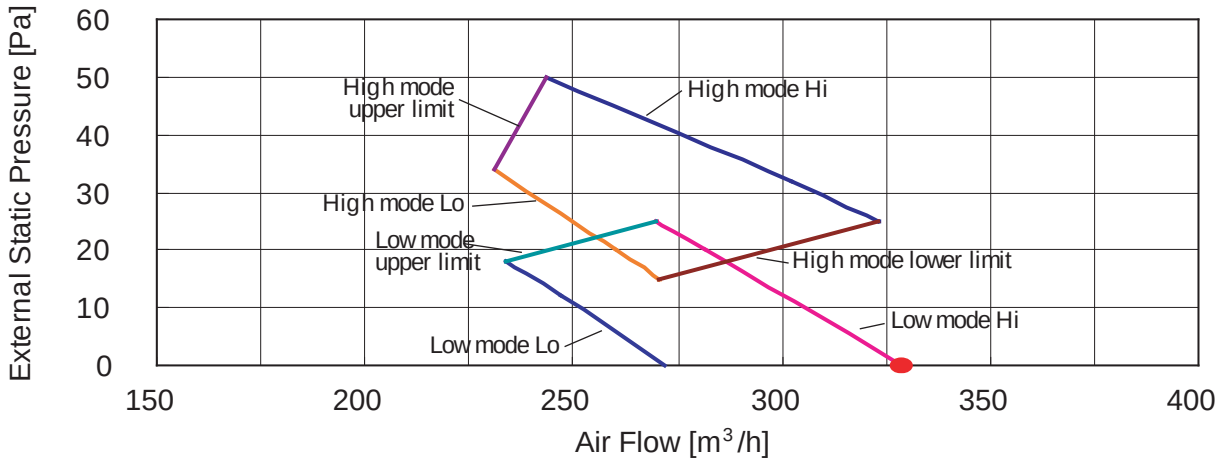

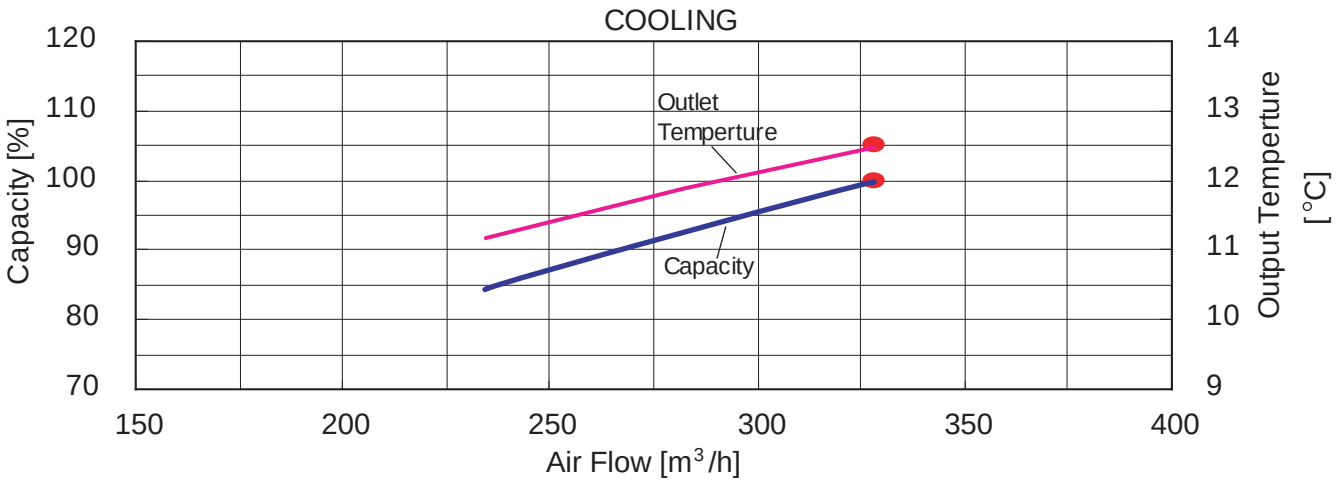

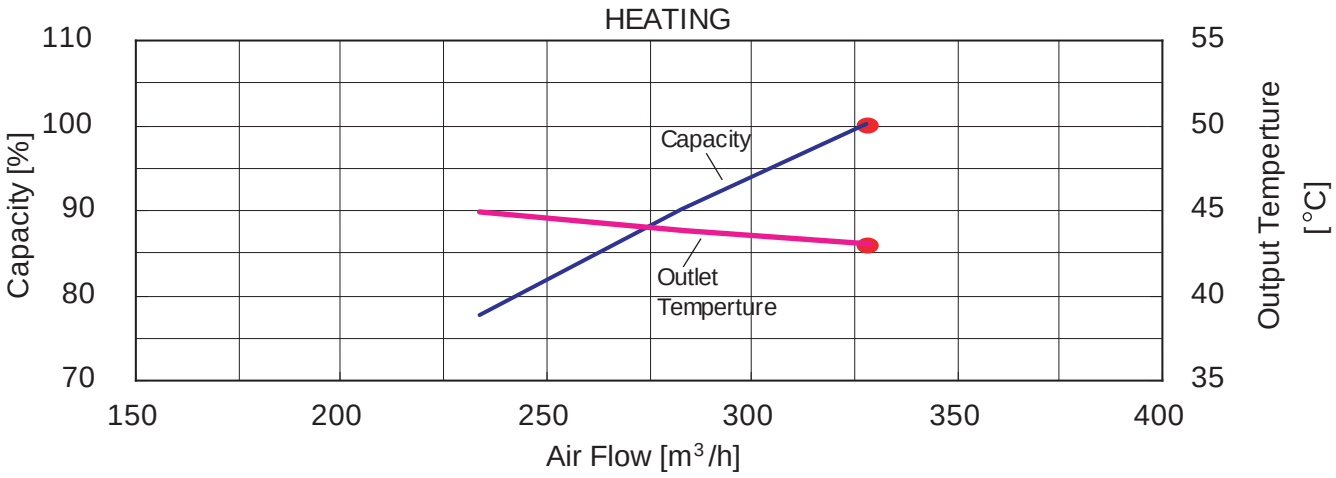

INDOOR UNIT

INDOOR UNIT

■MODEL : ARXB09

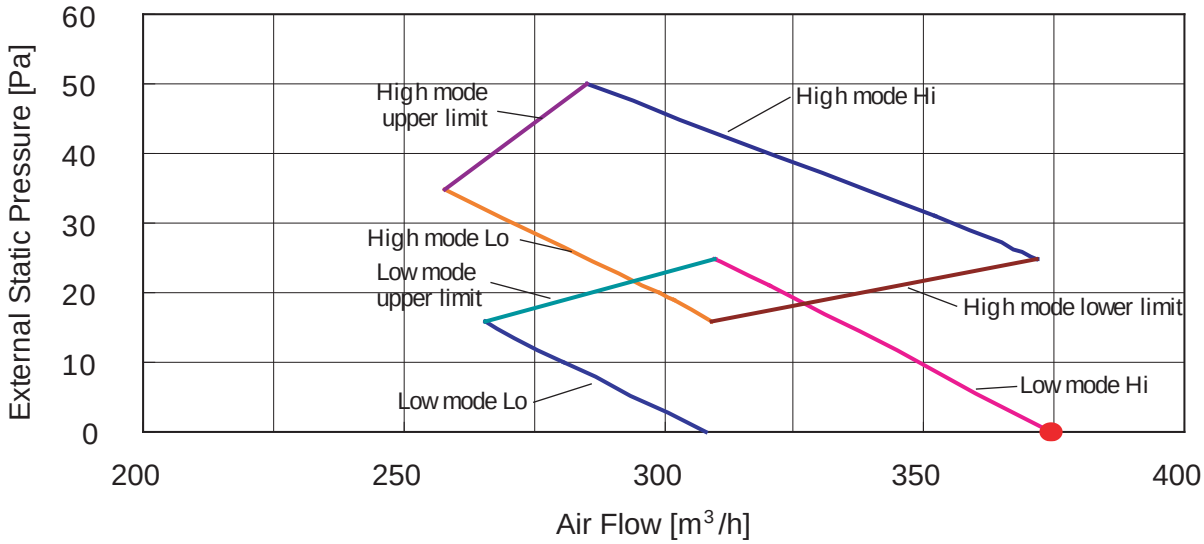

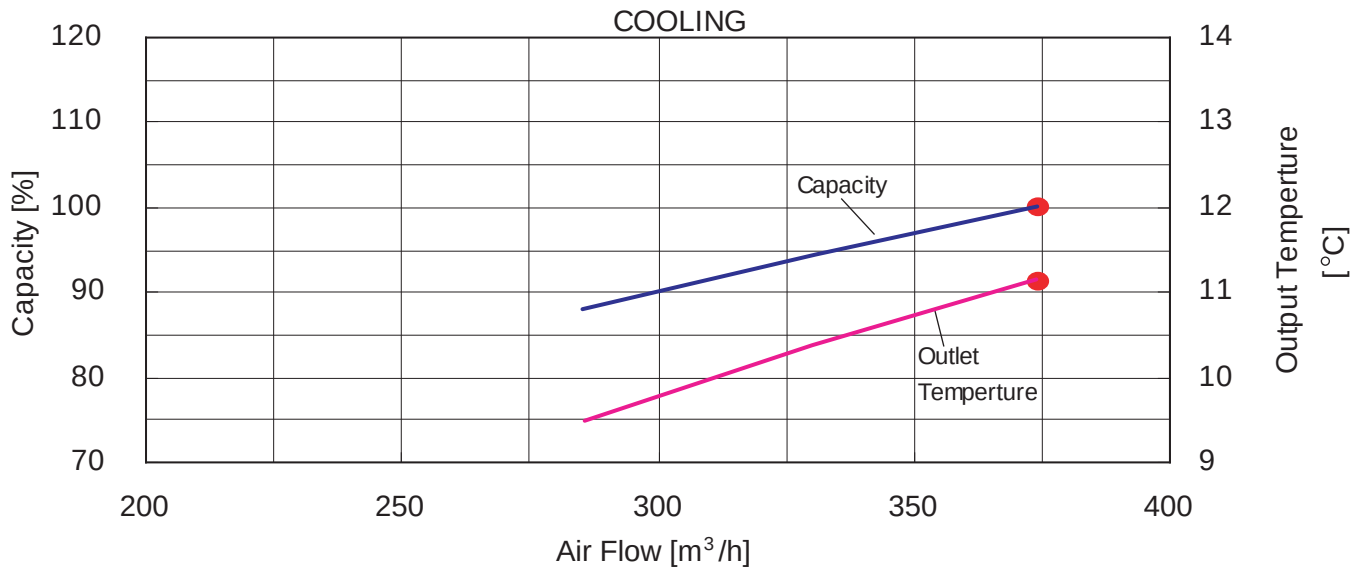

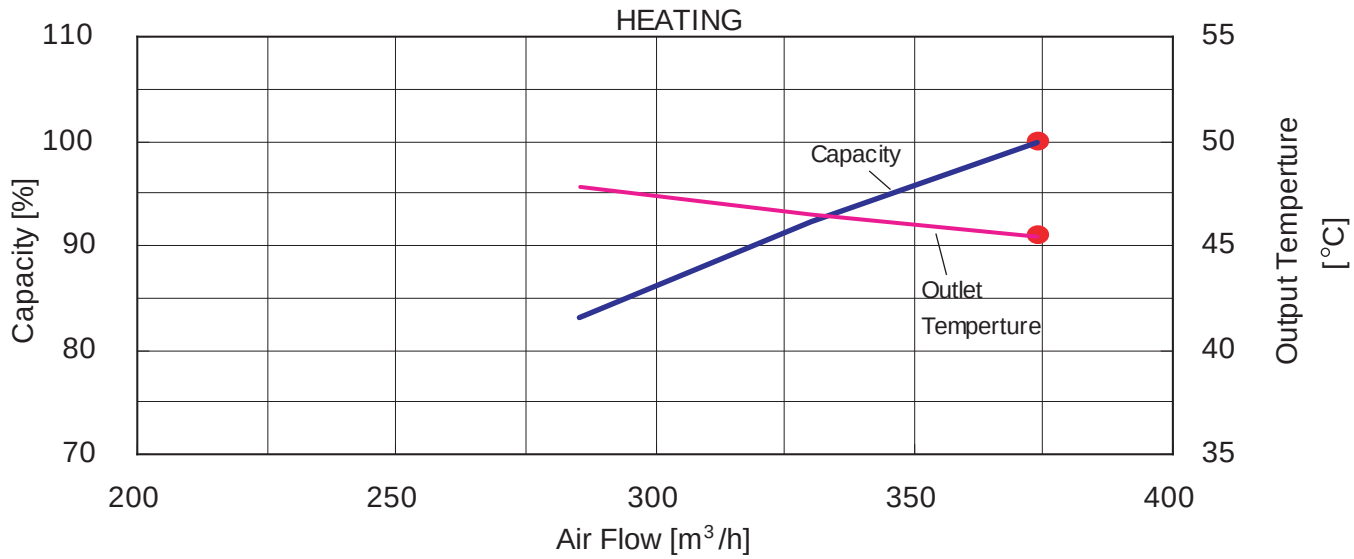

INDOOR UNIT

■MODEL : ARXB12

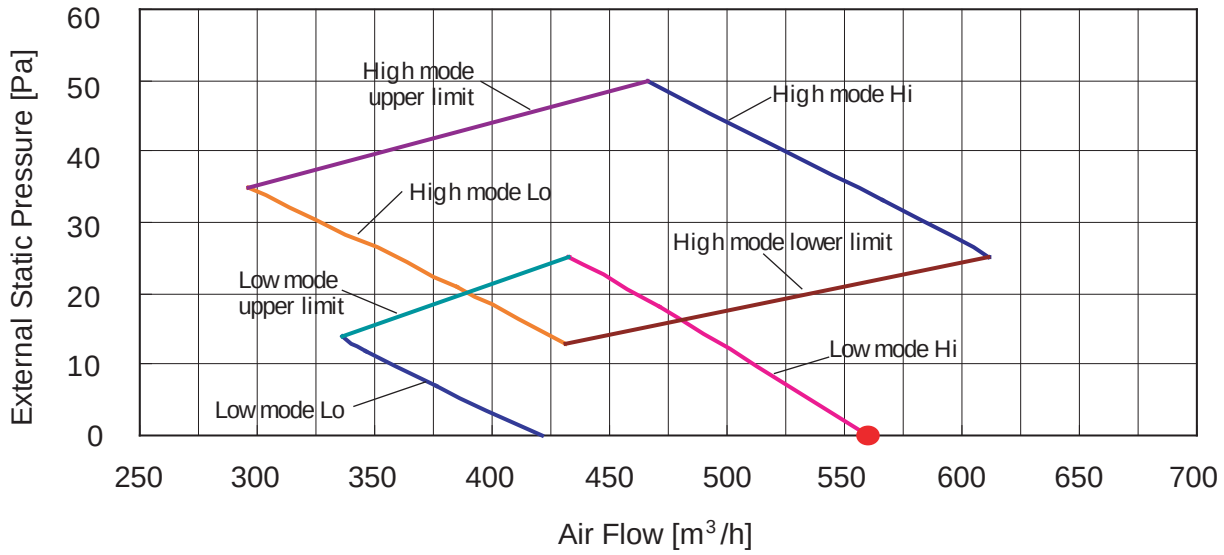

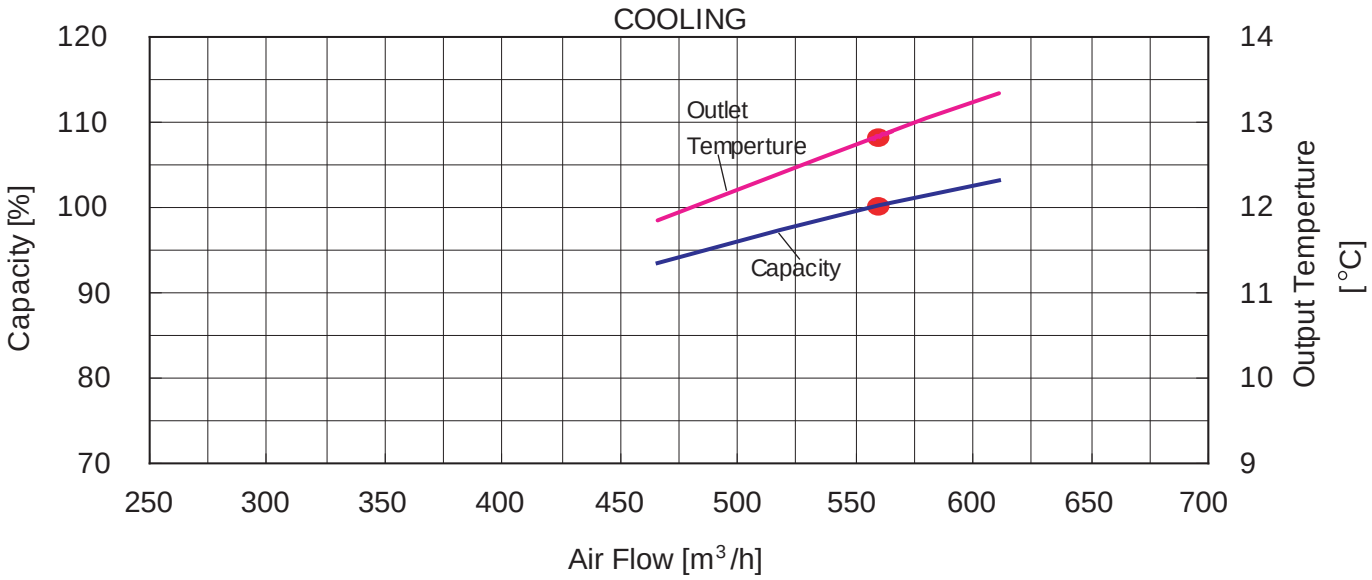

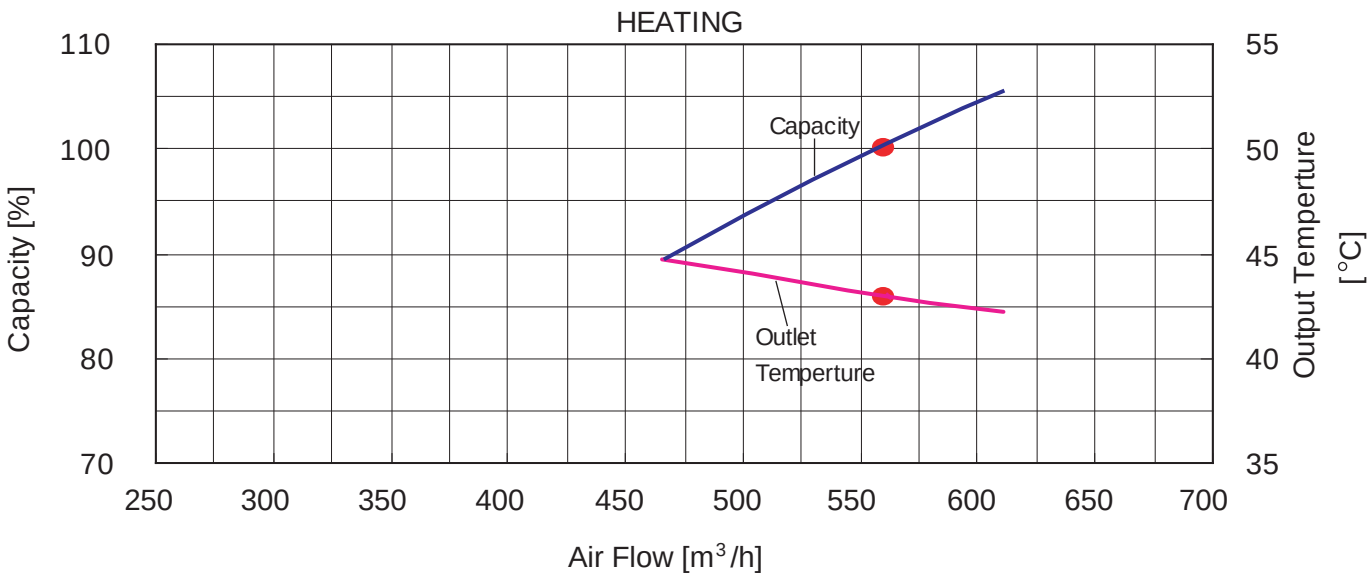

INDOOR UNIT

■MODEL : ARXB14

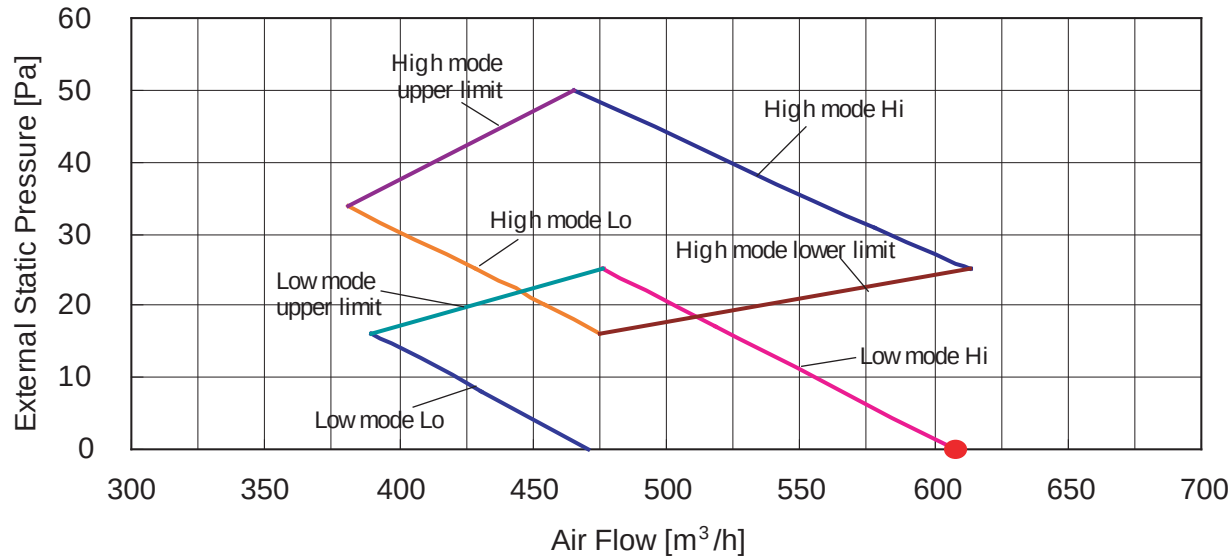

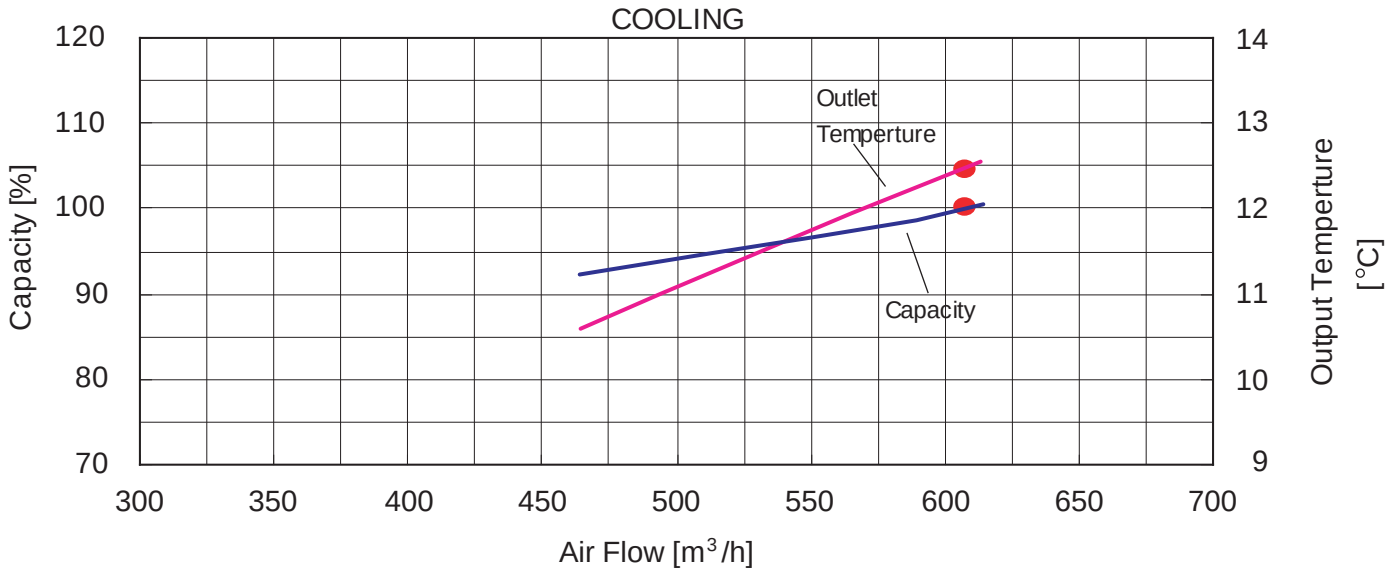

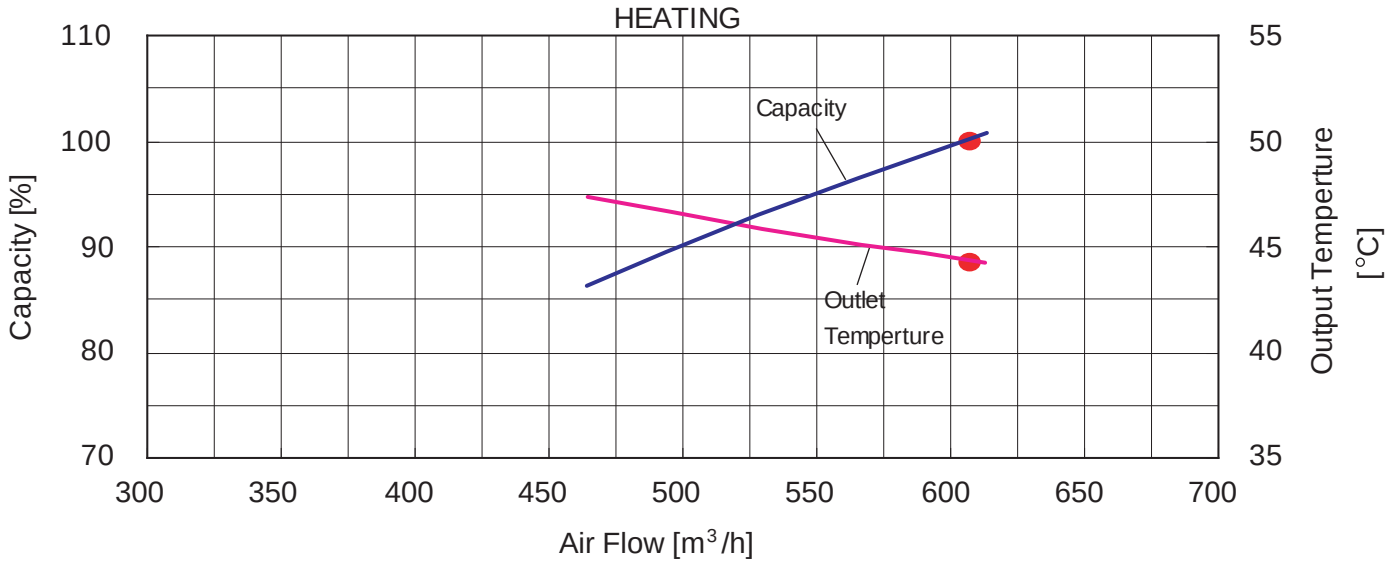

INDOOR UNIT

■MODEL : ARXB18

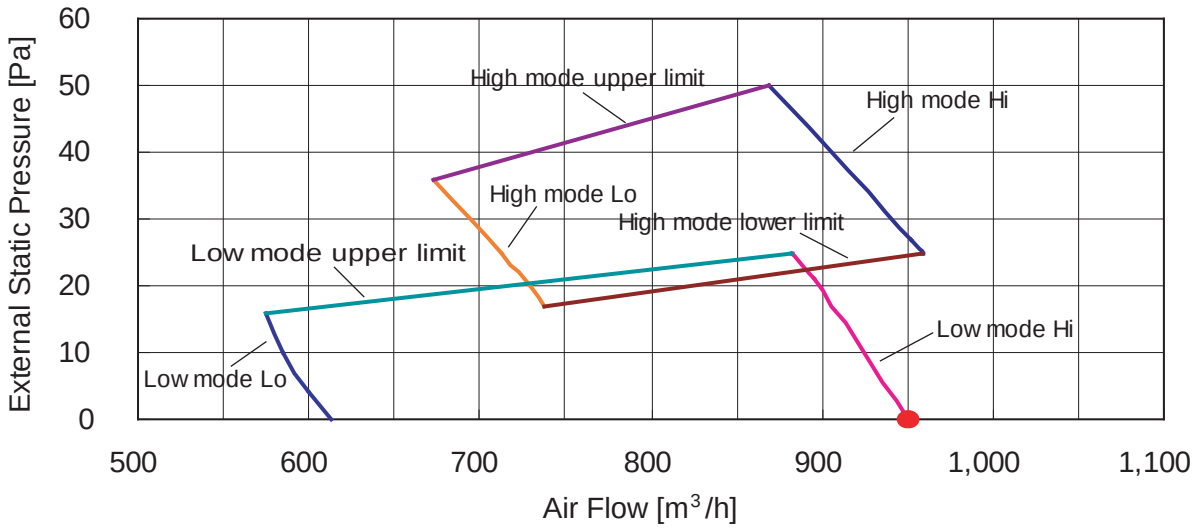

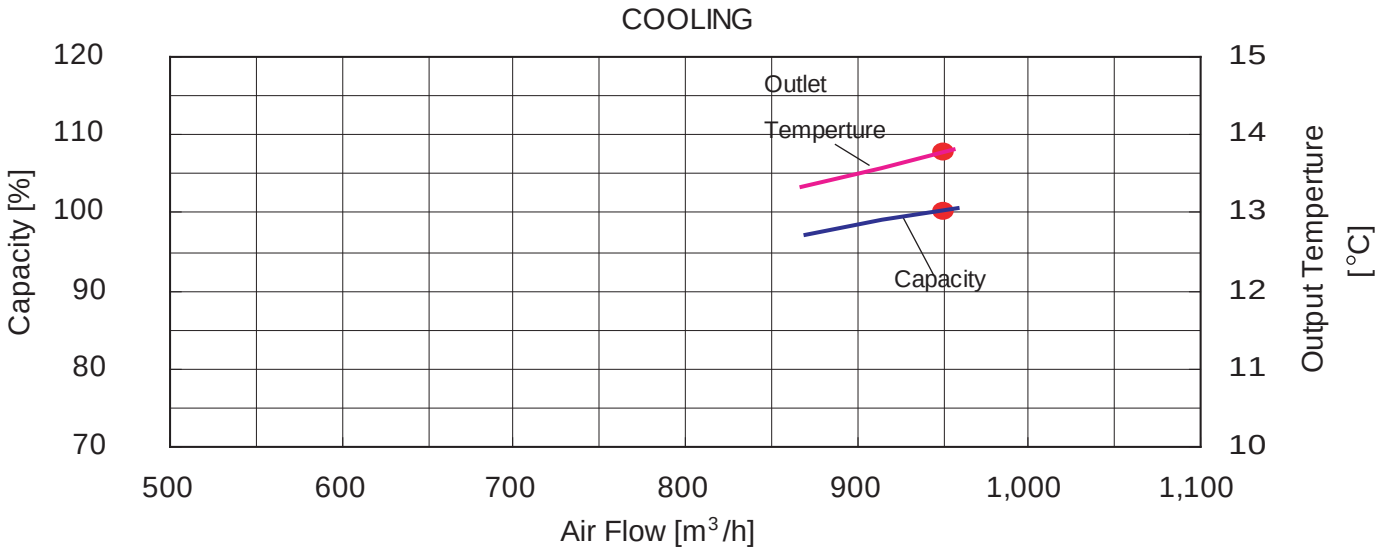

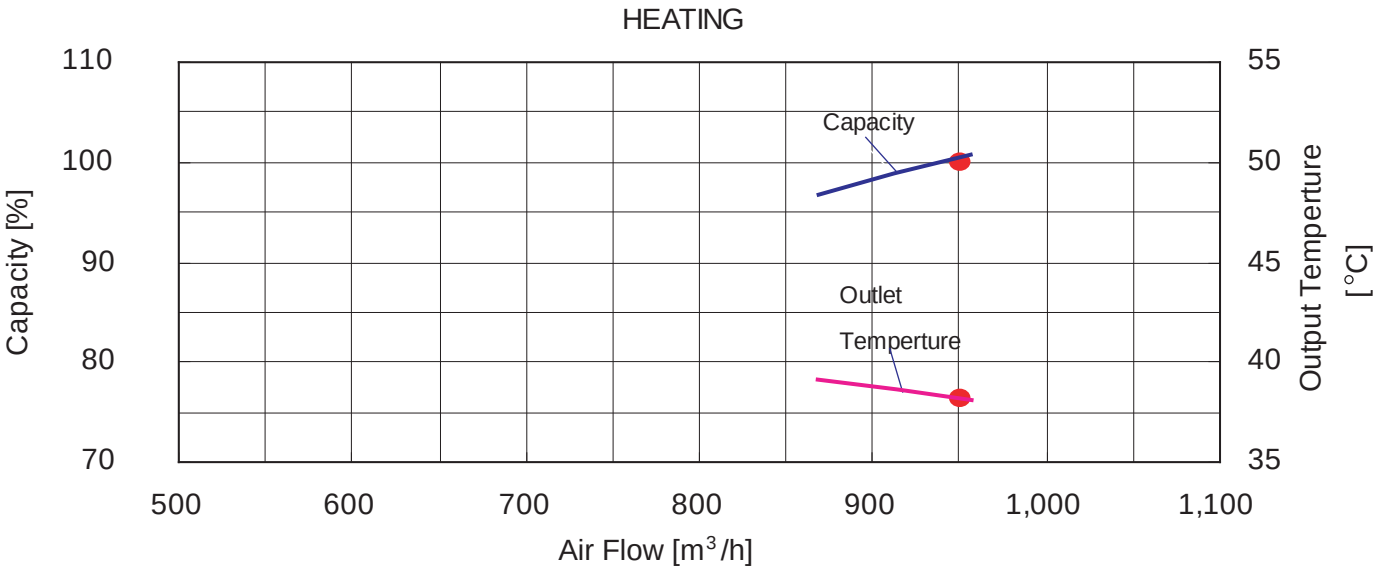

4-8-2. LOW STATIC PRESSURE DUCT TYPE

■MODEL : ARXB25

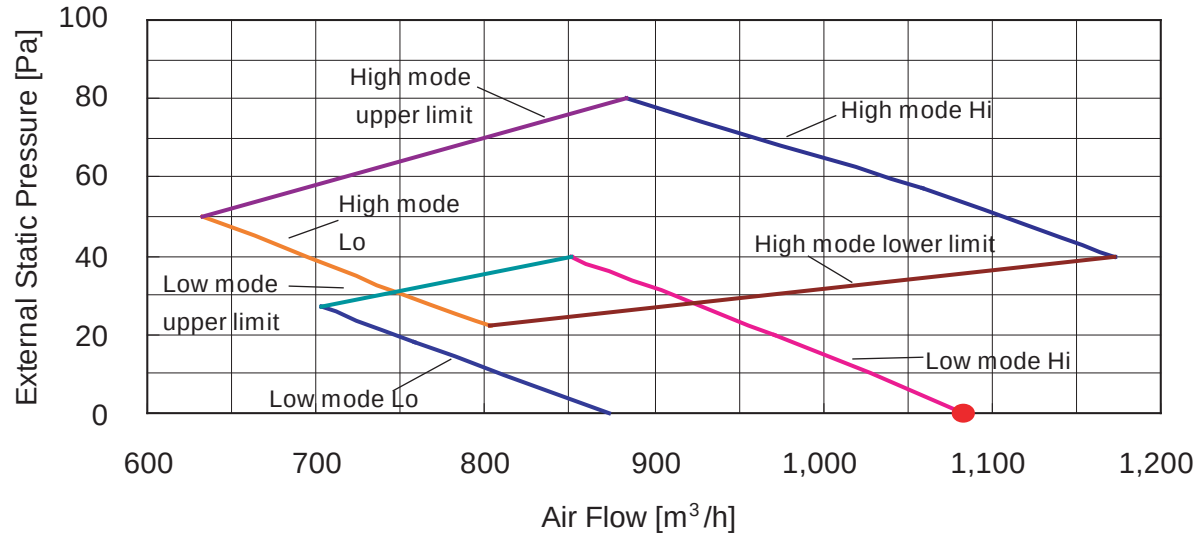

INDOOR UNIT

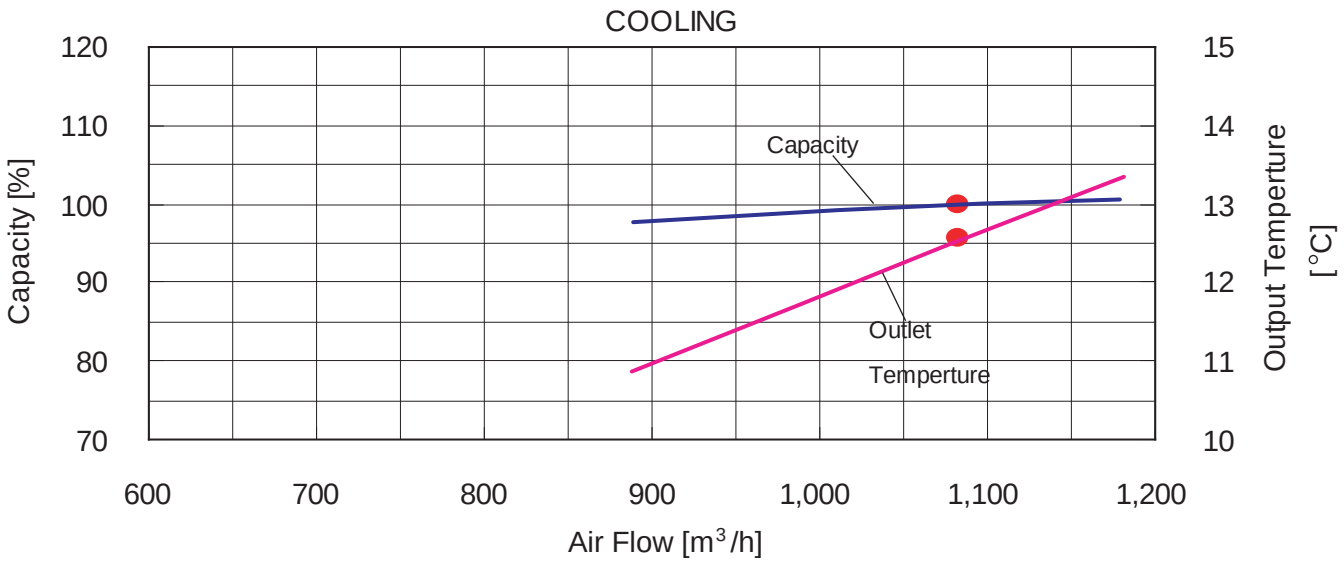

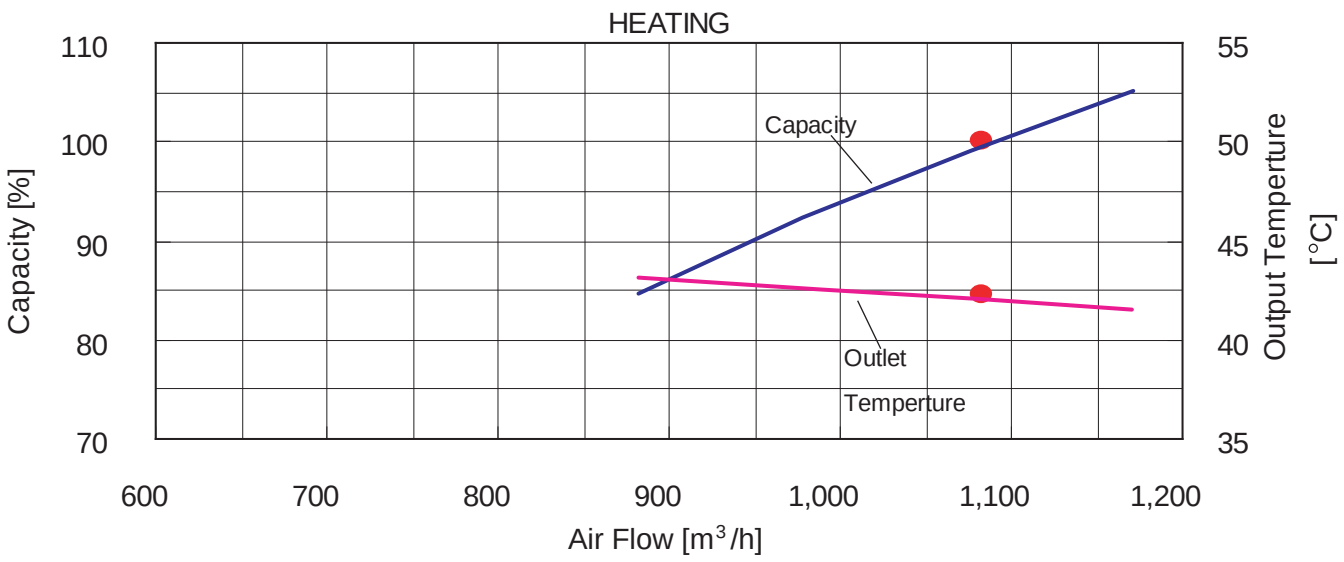

■MODEL : ARXB30

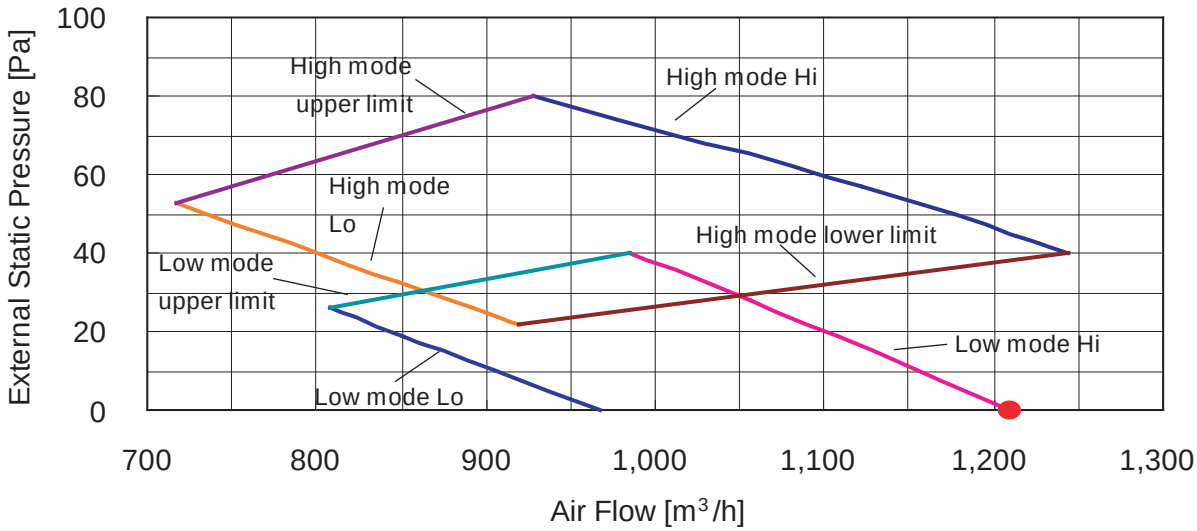

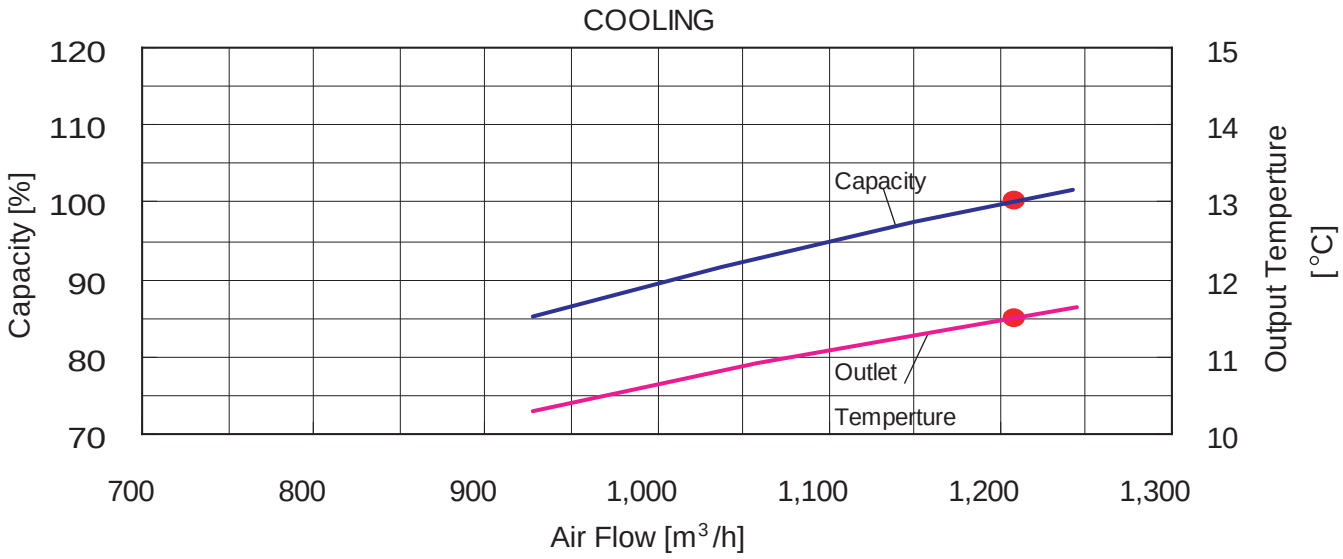

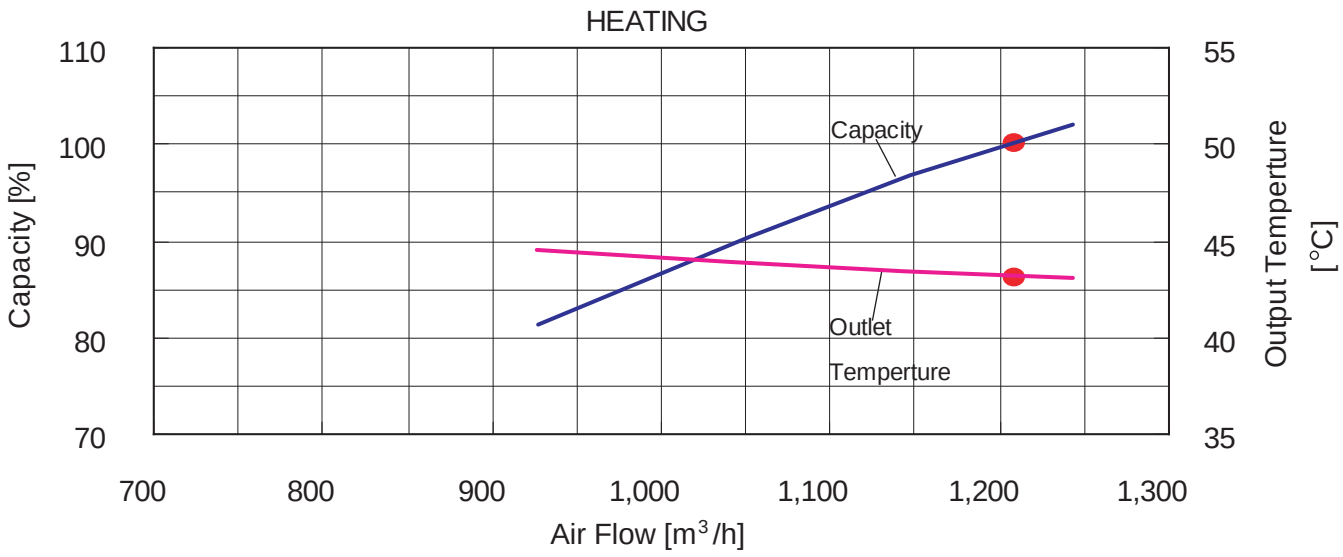

■MODEL : ARXB36

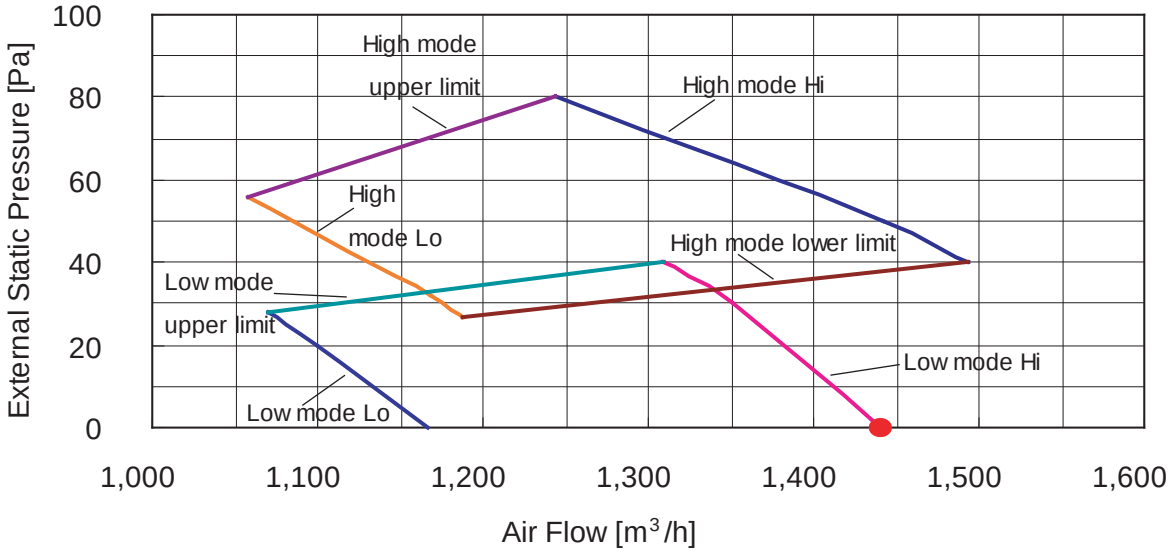

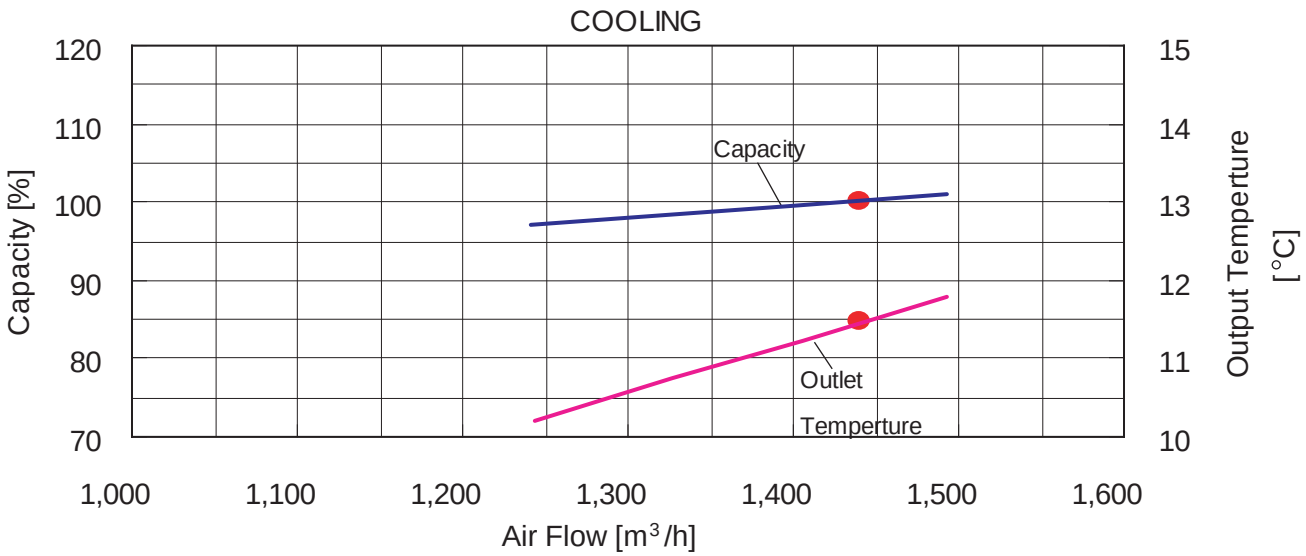

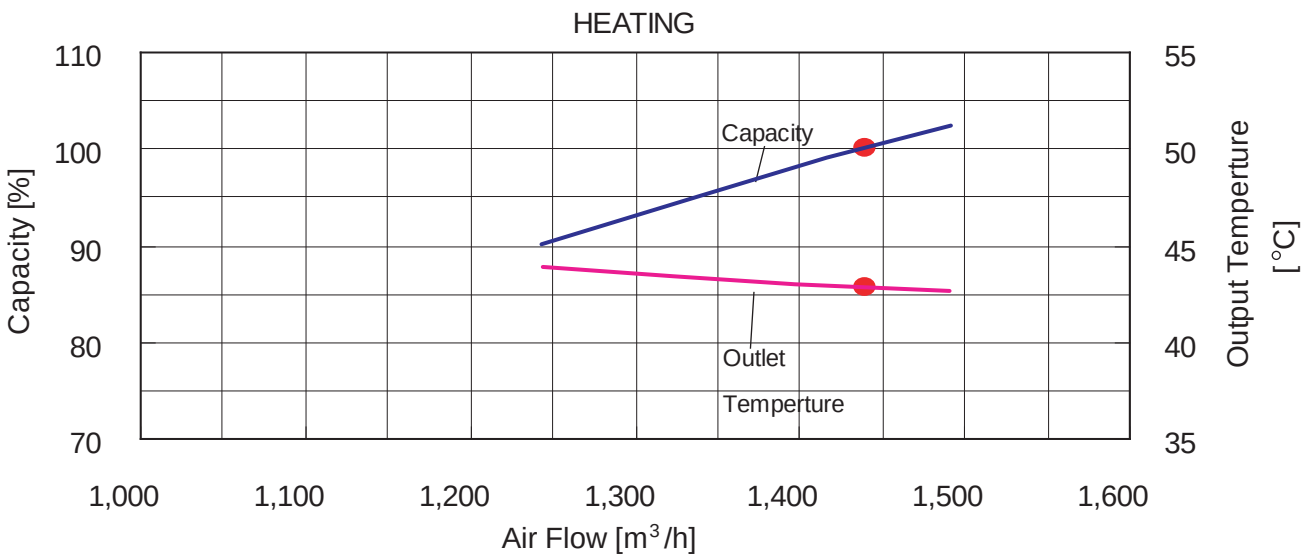

■MODEL : ARXB45

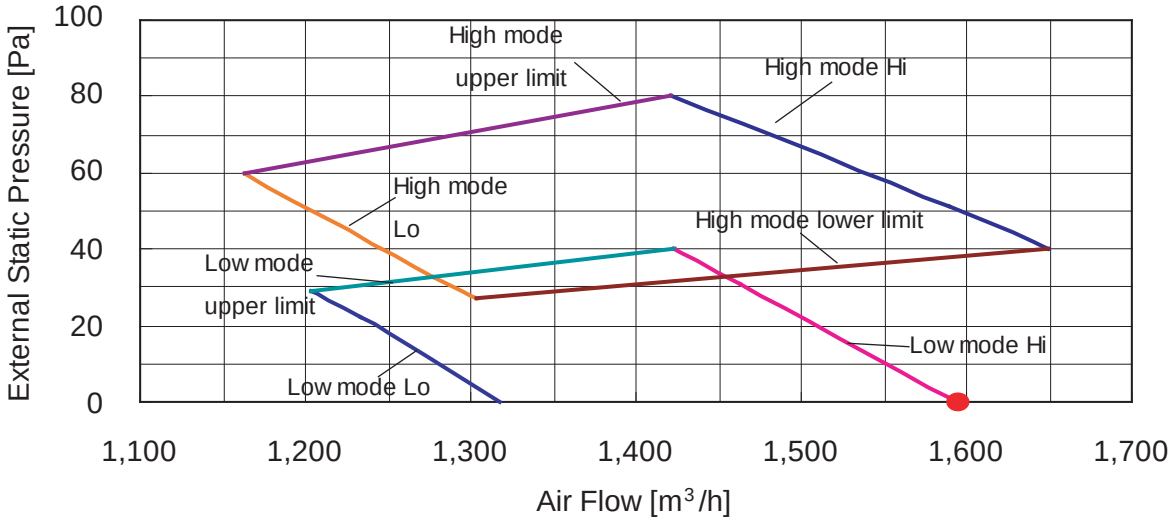

INDOOR UNIT

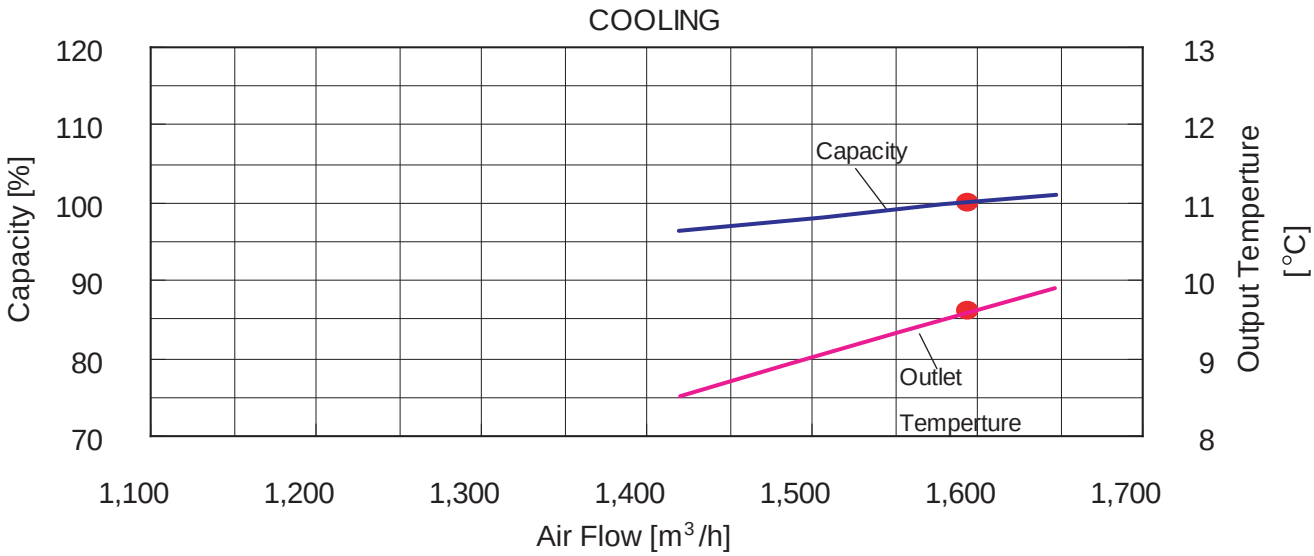

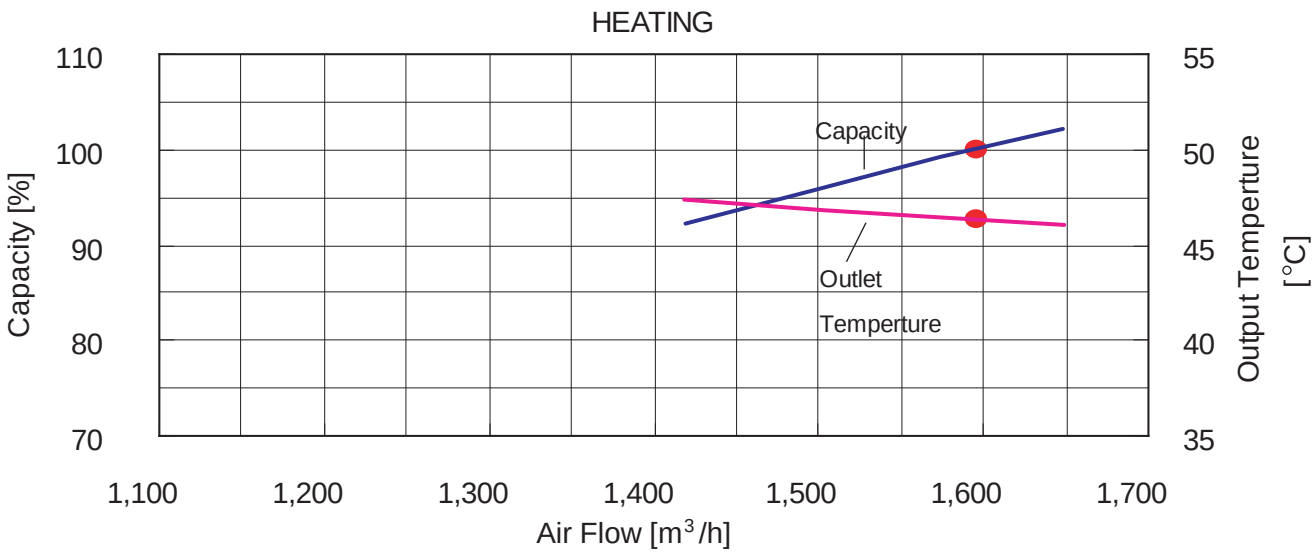

4-8-3. DUCT TYPE

■MODEL : ARXA25

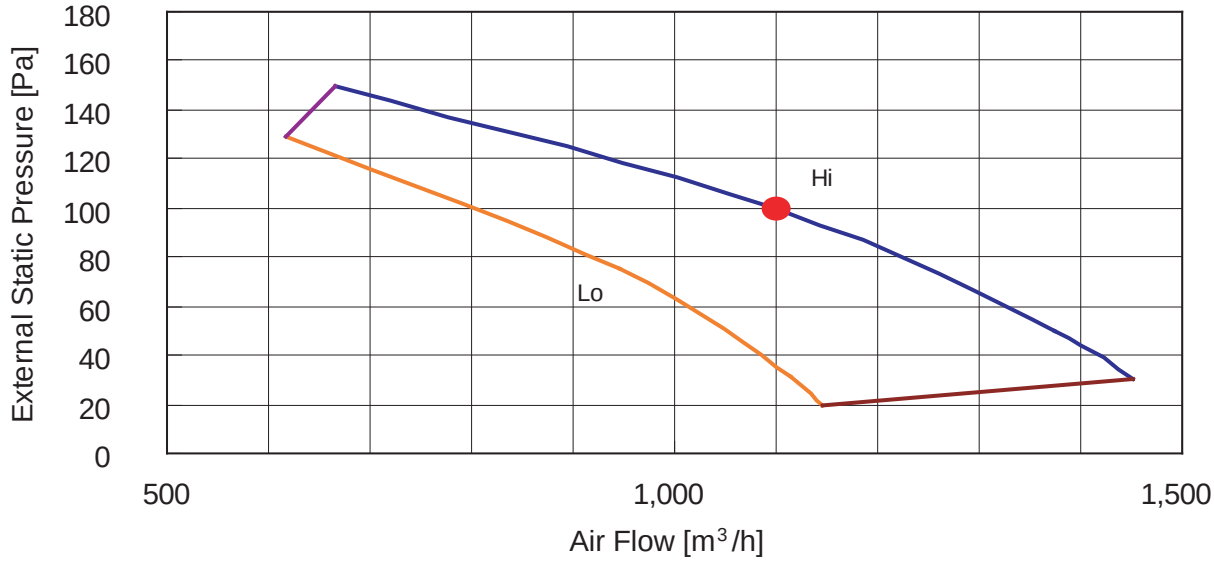

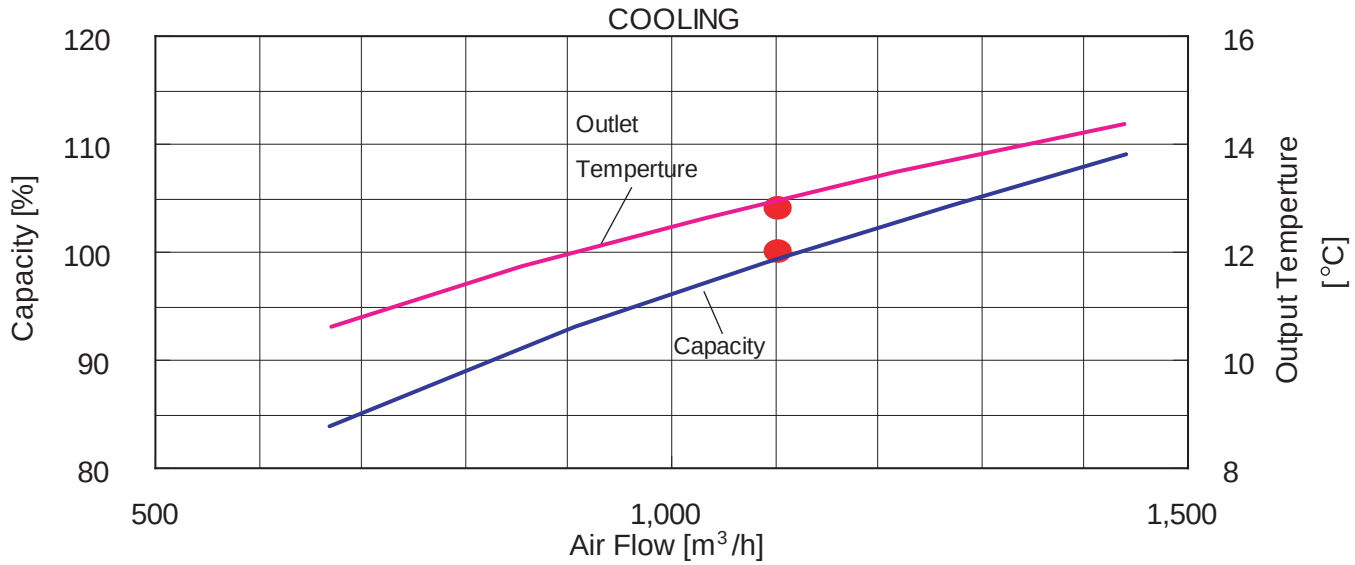

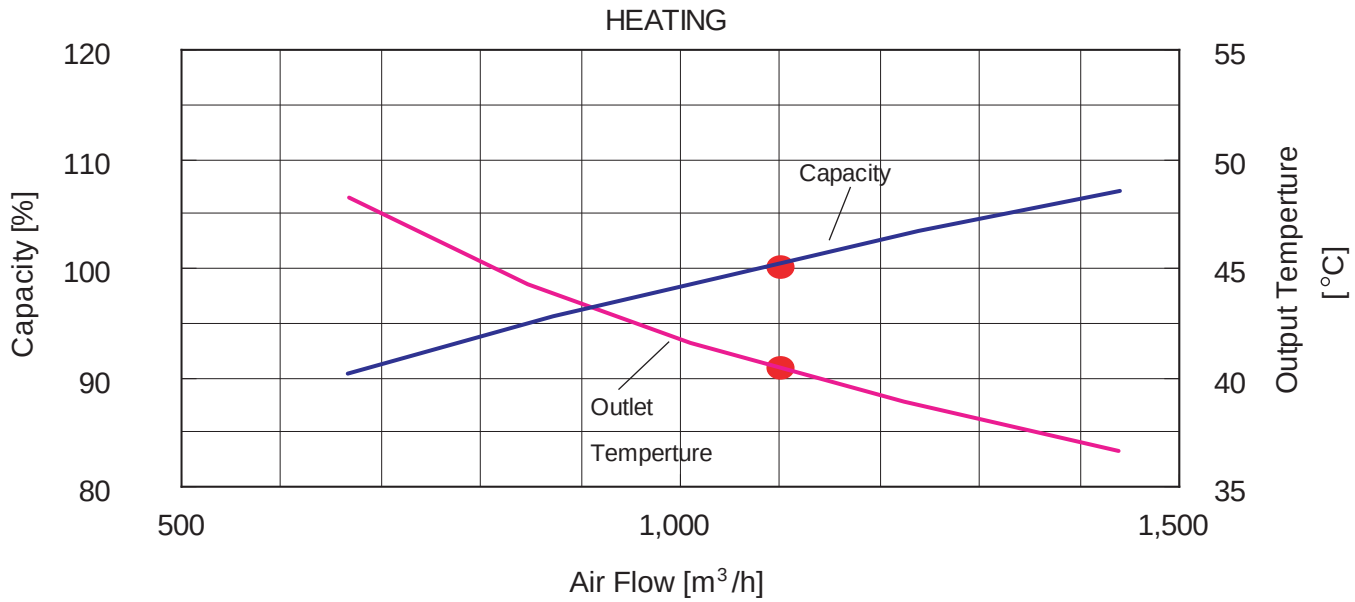

INDOOR UNIT

■MODEL : ARXA30

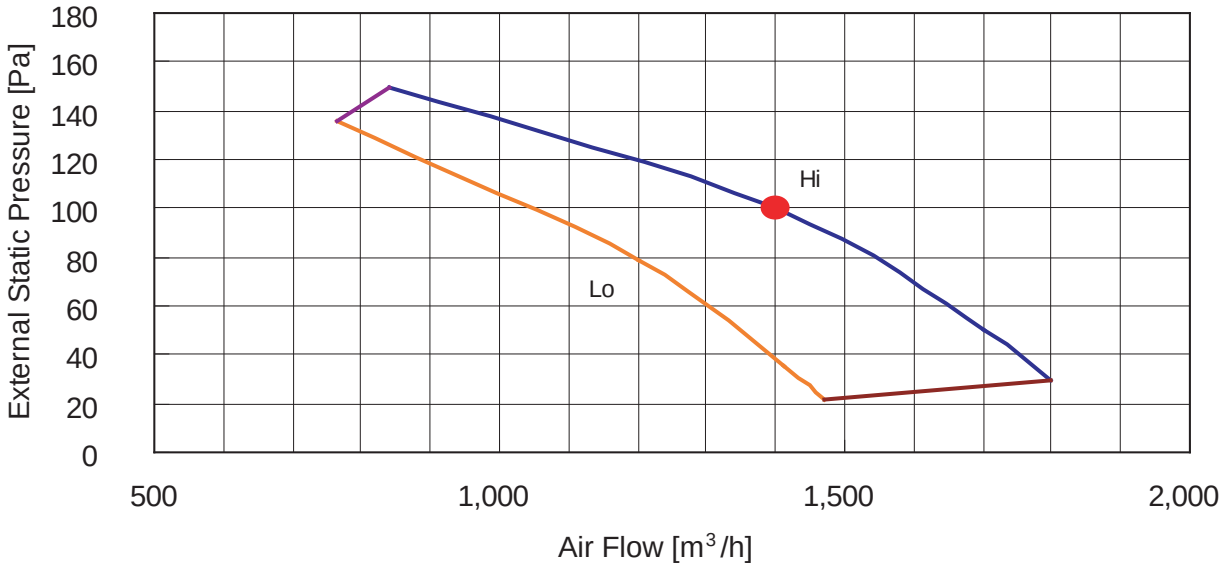

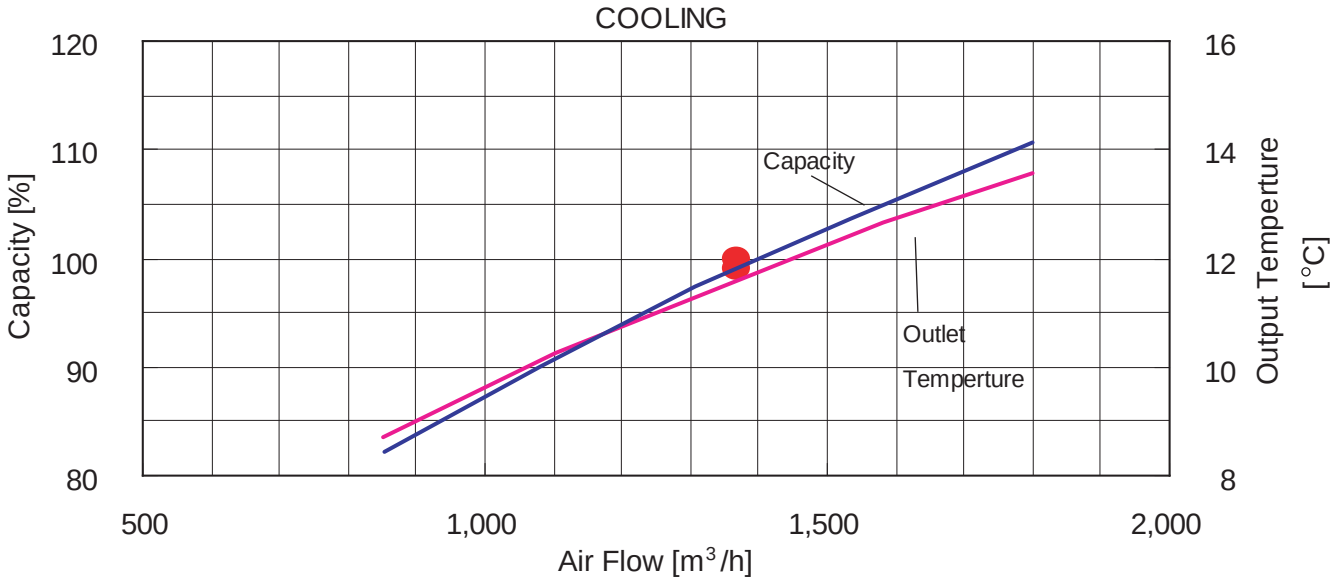

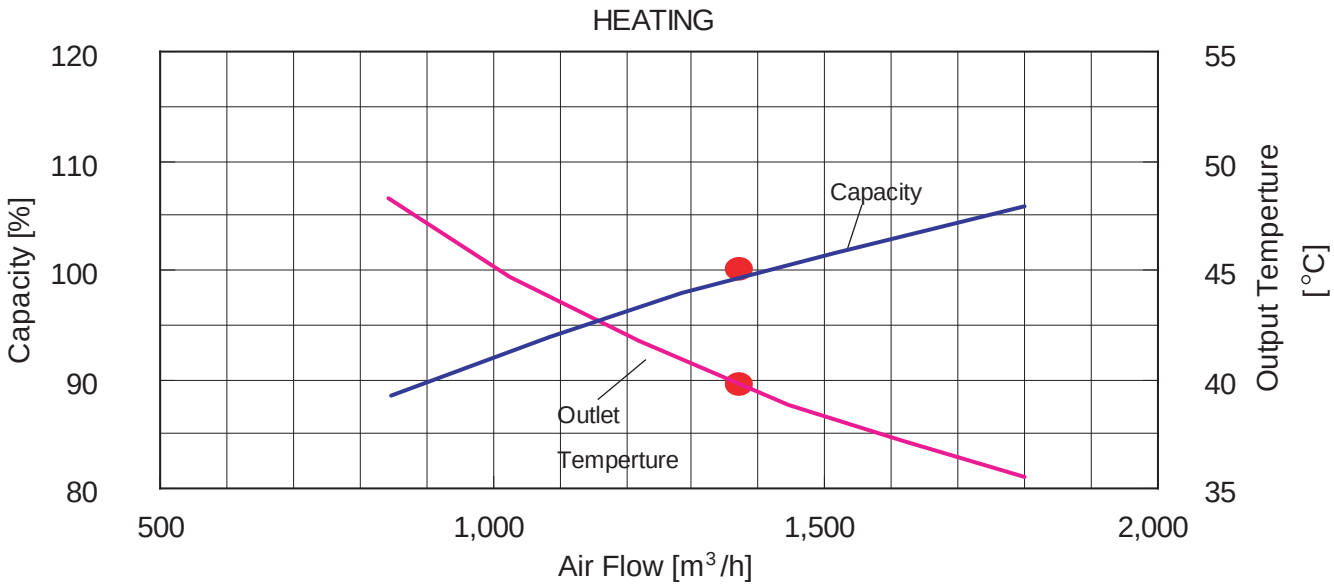

INDOOR UNIT

■MODEL : ARXA36

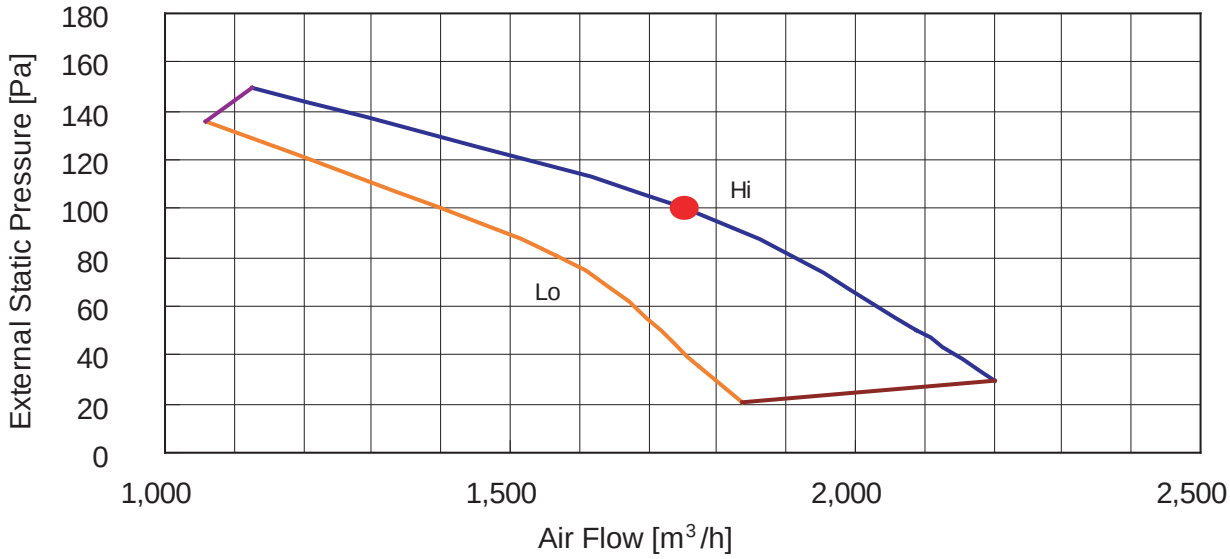

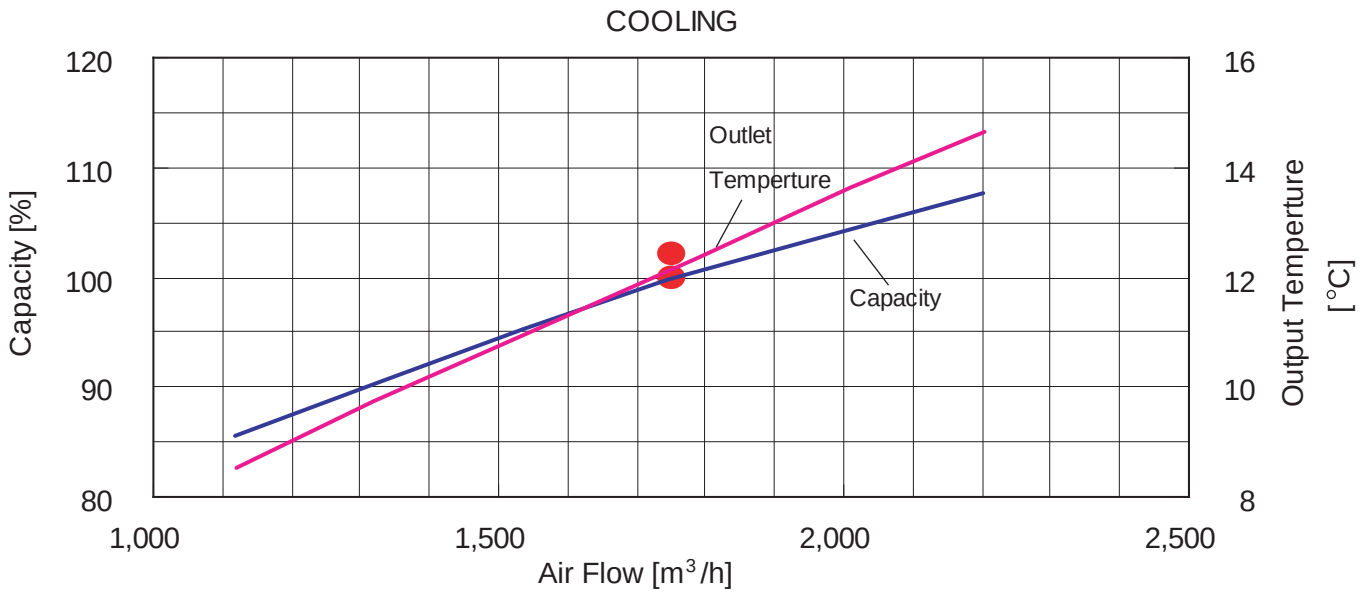

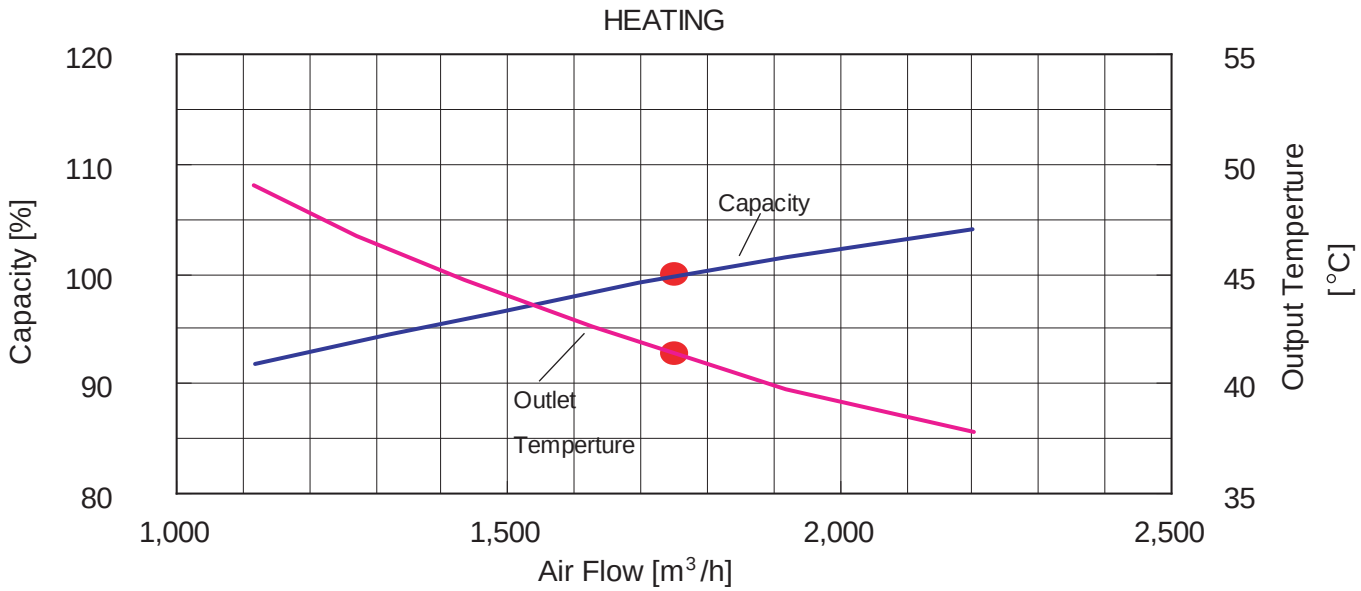

■MODEL : ARXA45

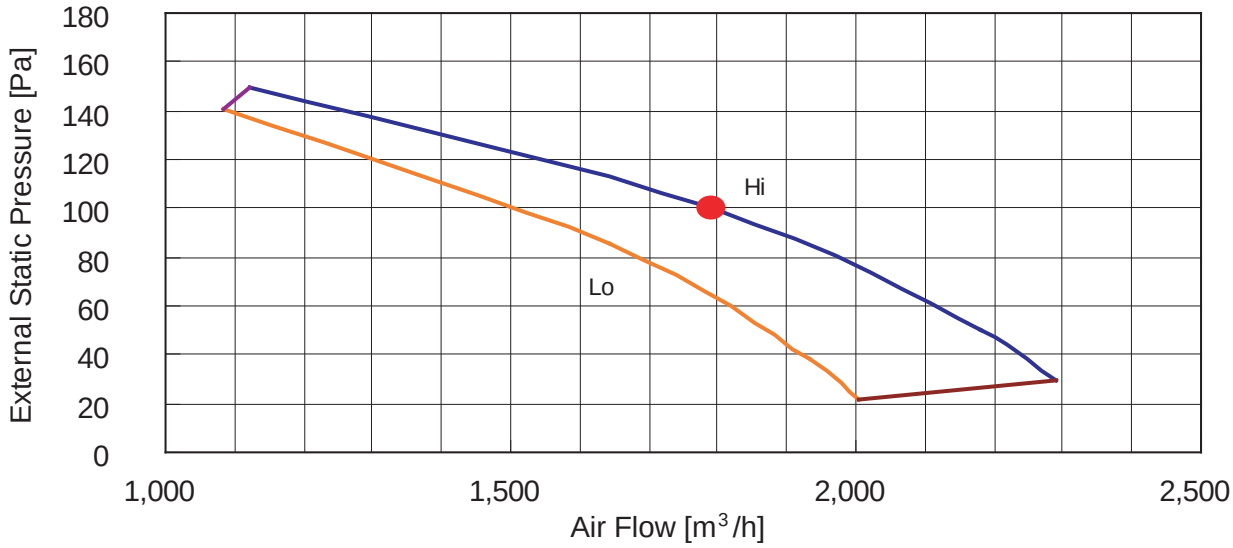

COOLING

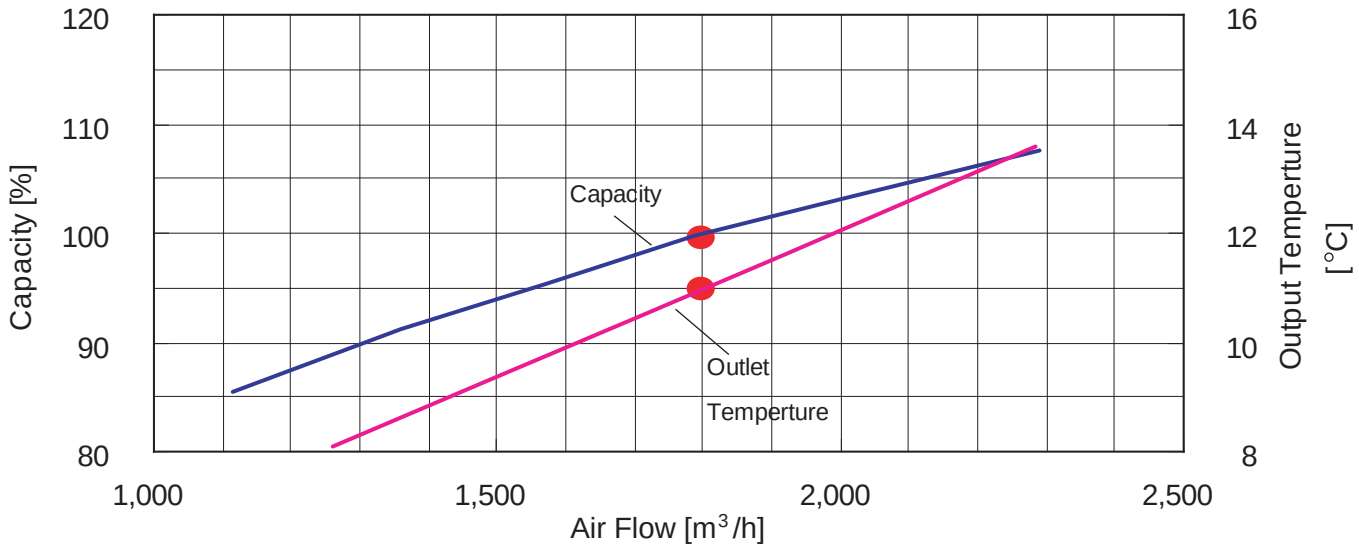

HEATING

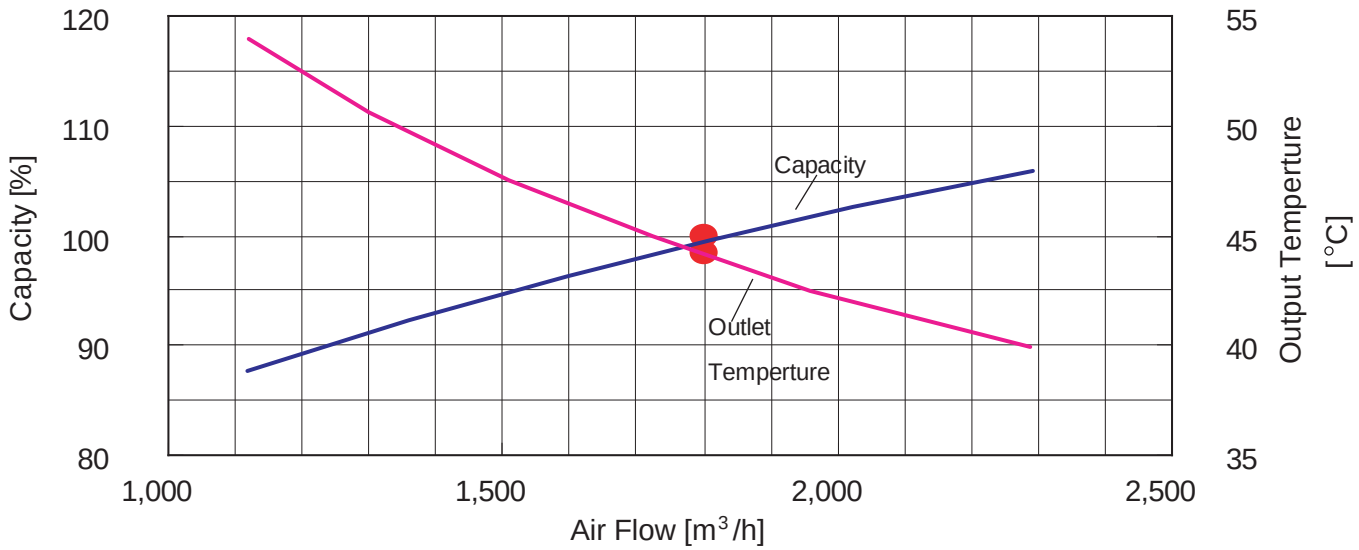

INDOOR UNIT

4-8-4. HIGH STATIC PRESSURE DUCT TYPE

■MODEL : ARXC36

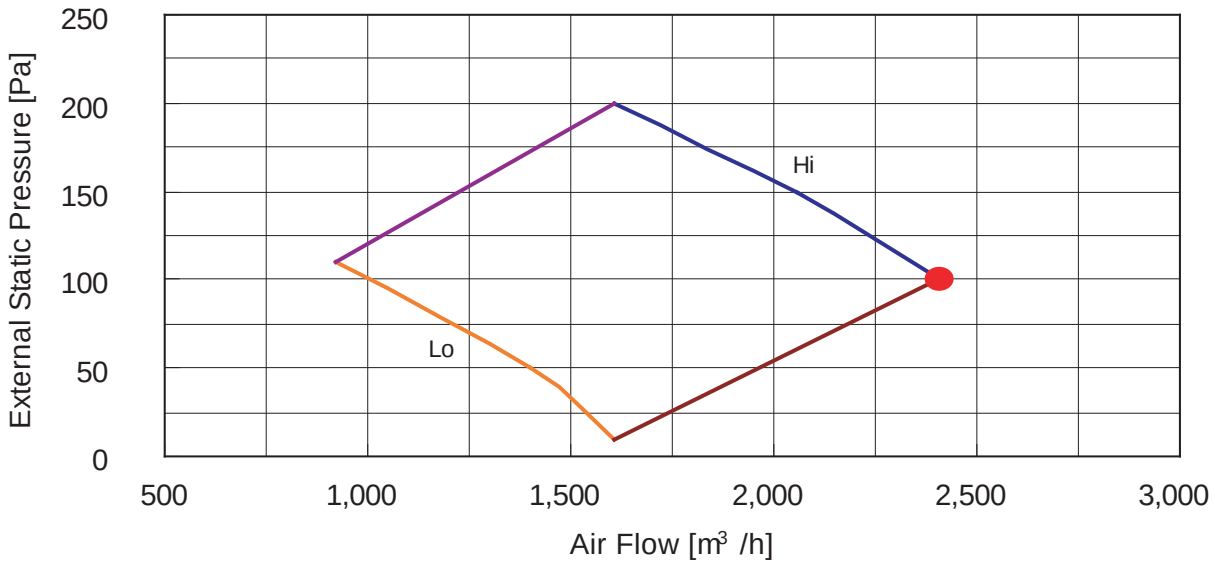

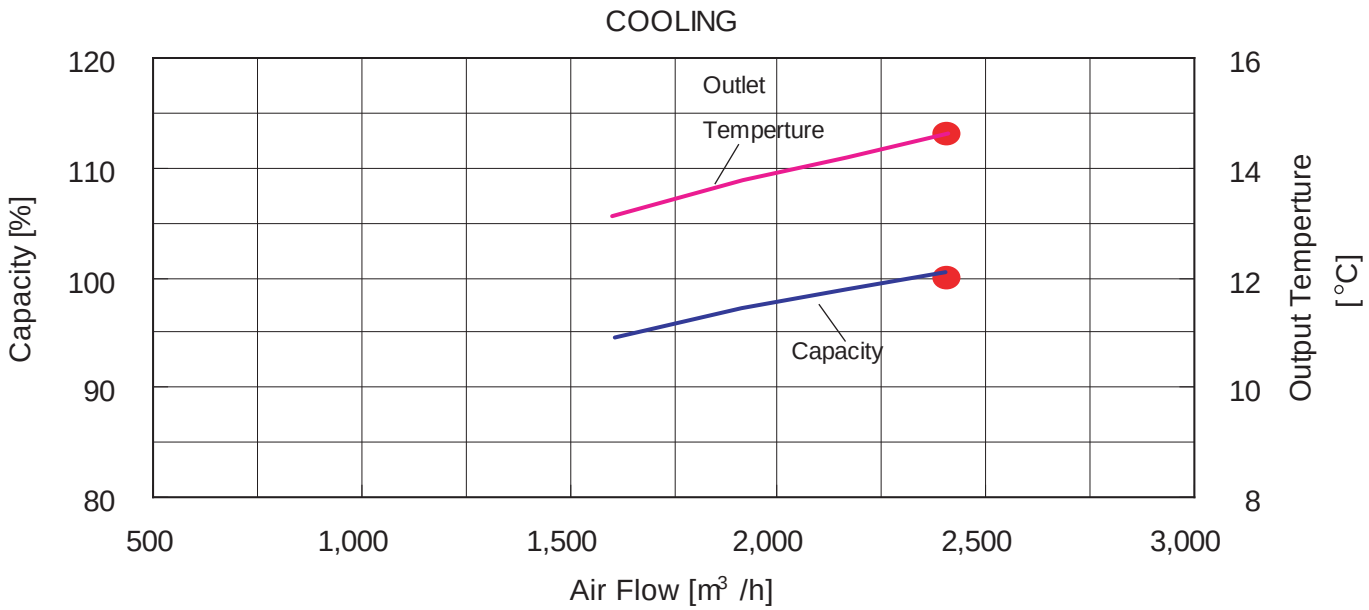

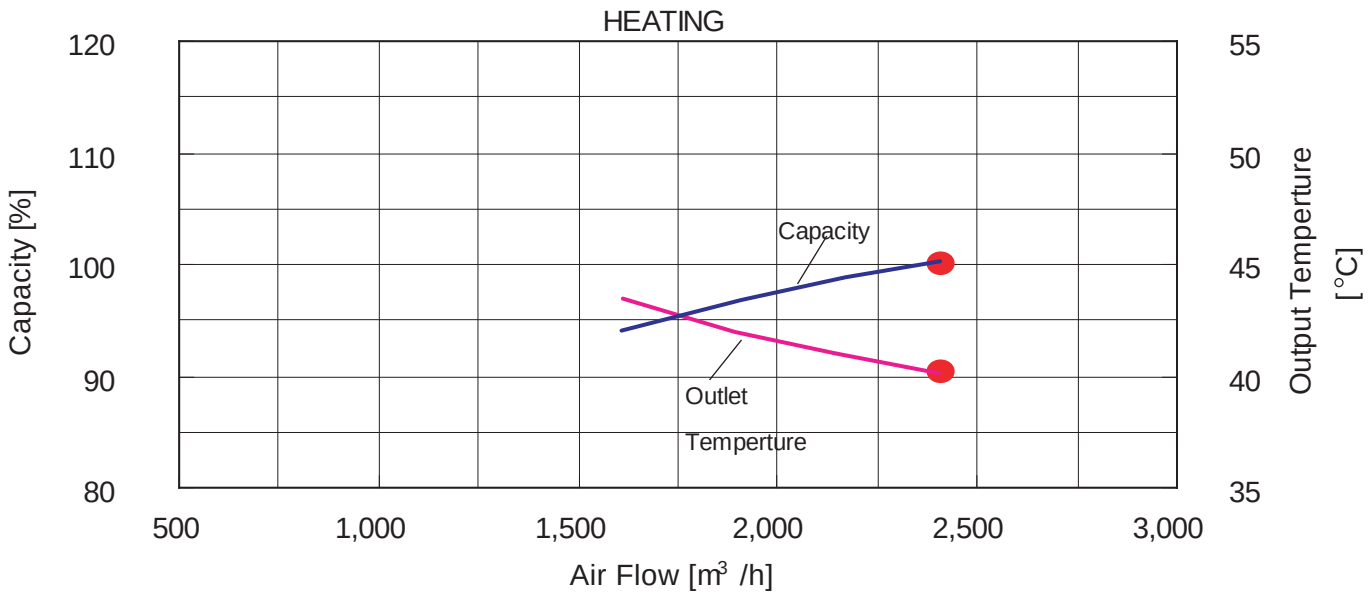

INDOOR UNIT

INDOOR UNIT

■MODEL : ARXC45

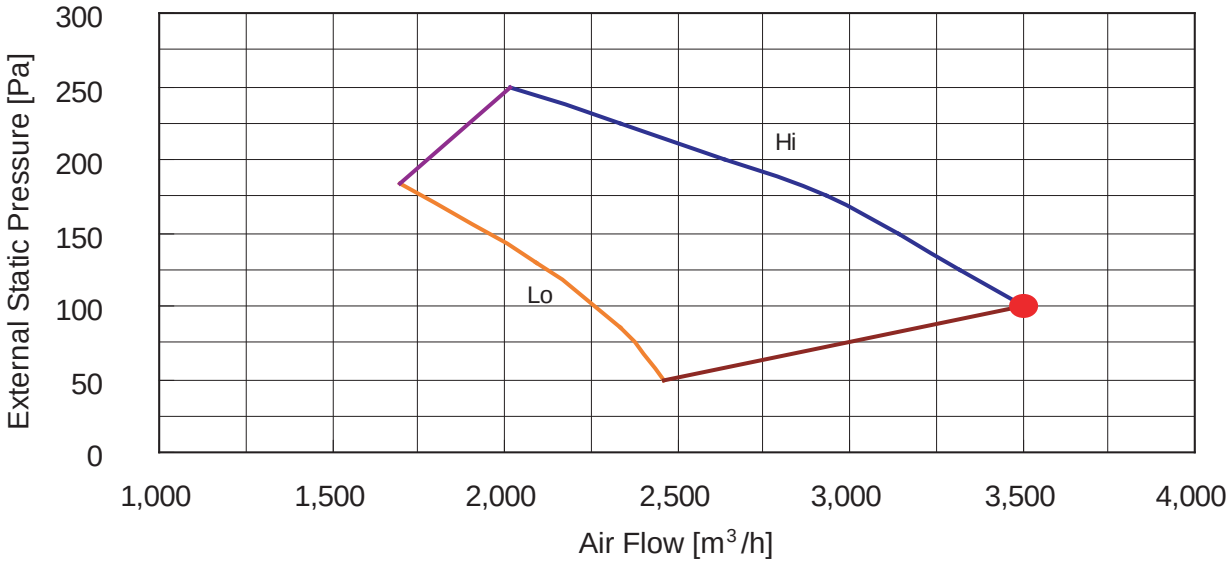

COOLING

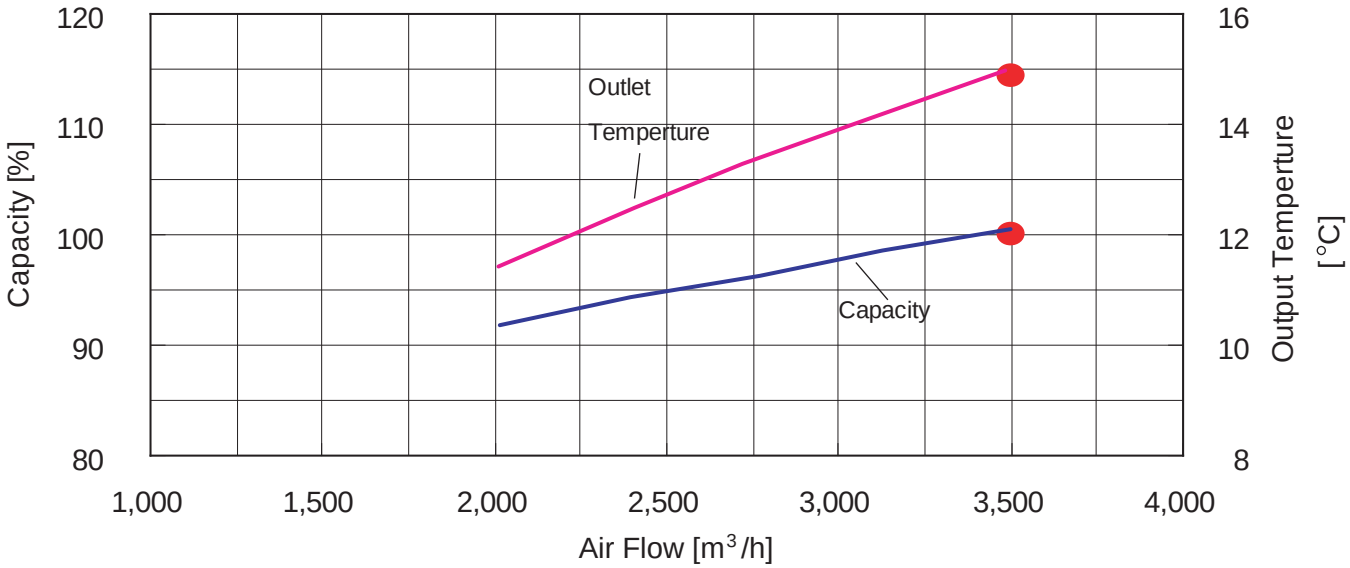

HEATING

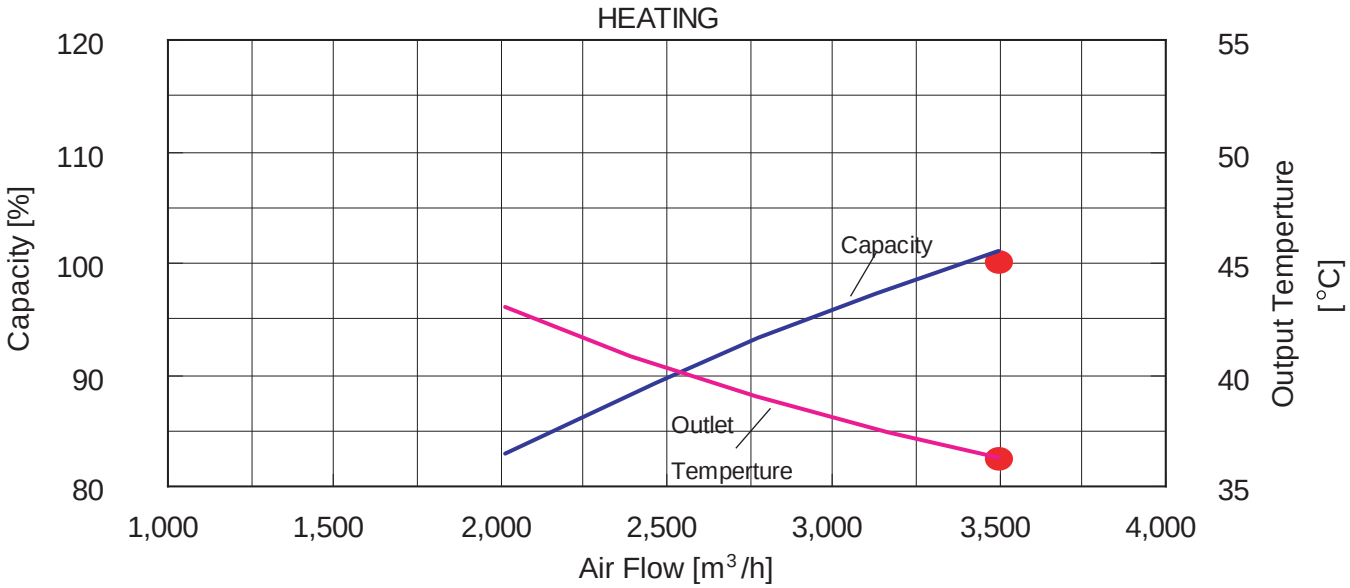

■MODEL : ARXC60

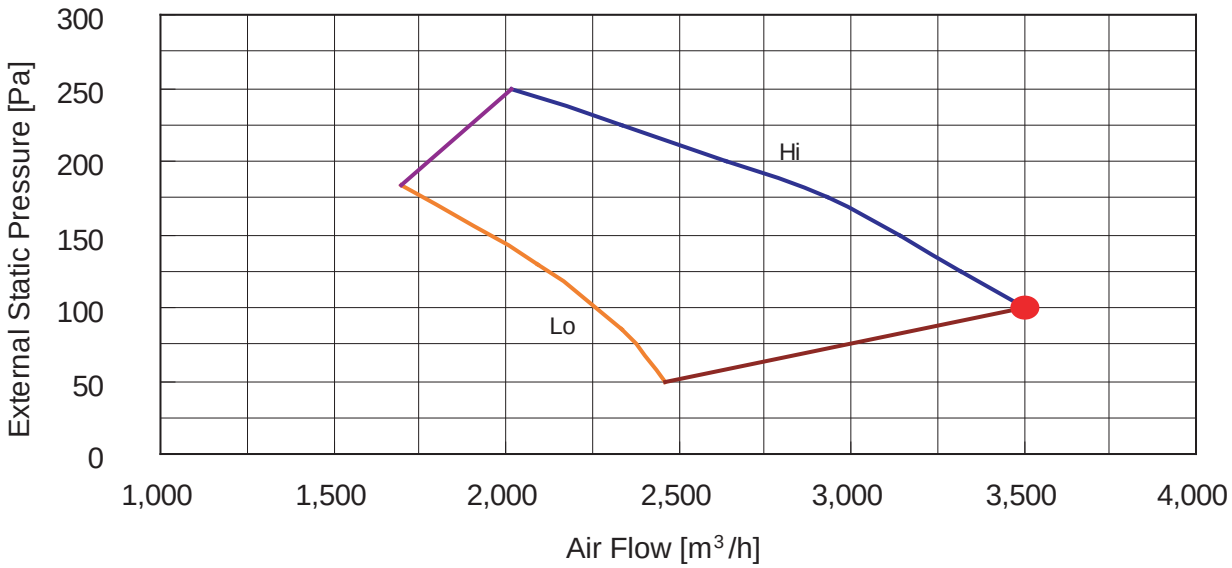

COOLING

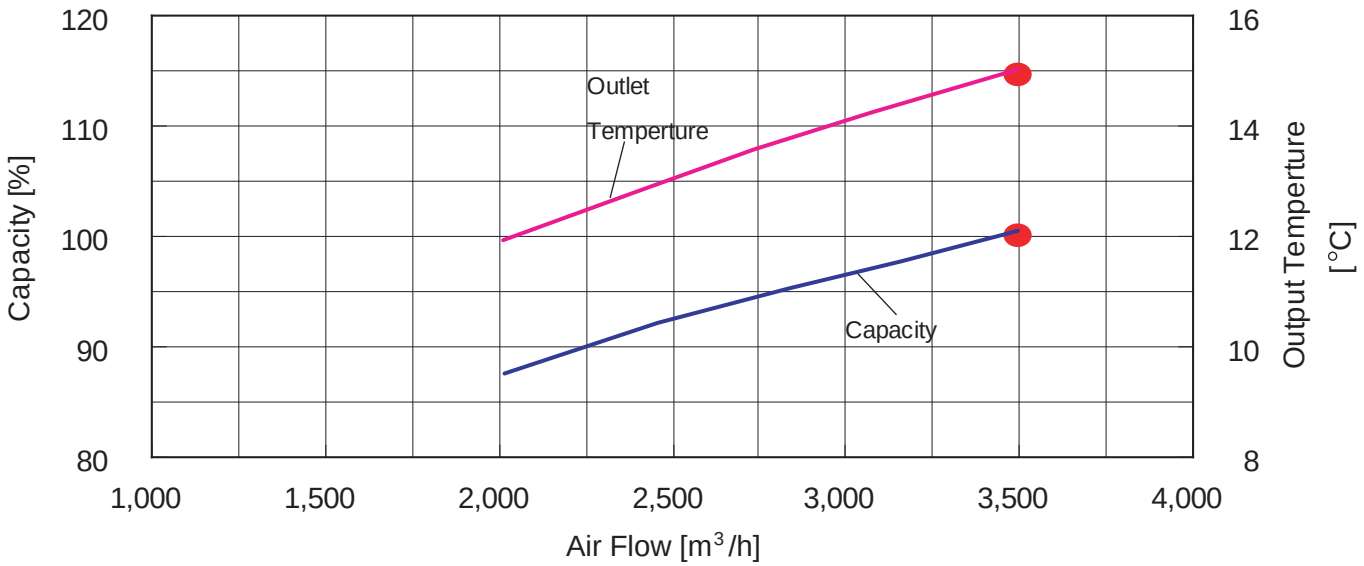

HEATING

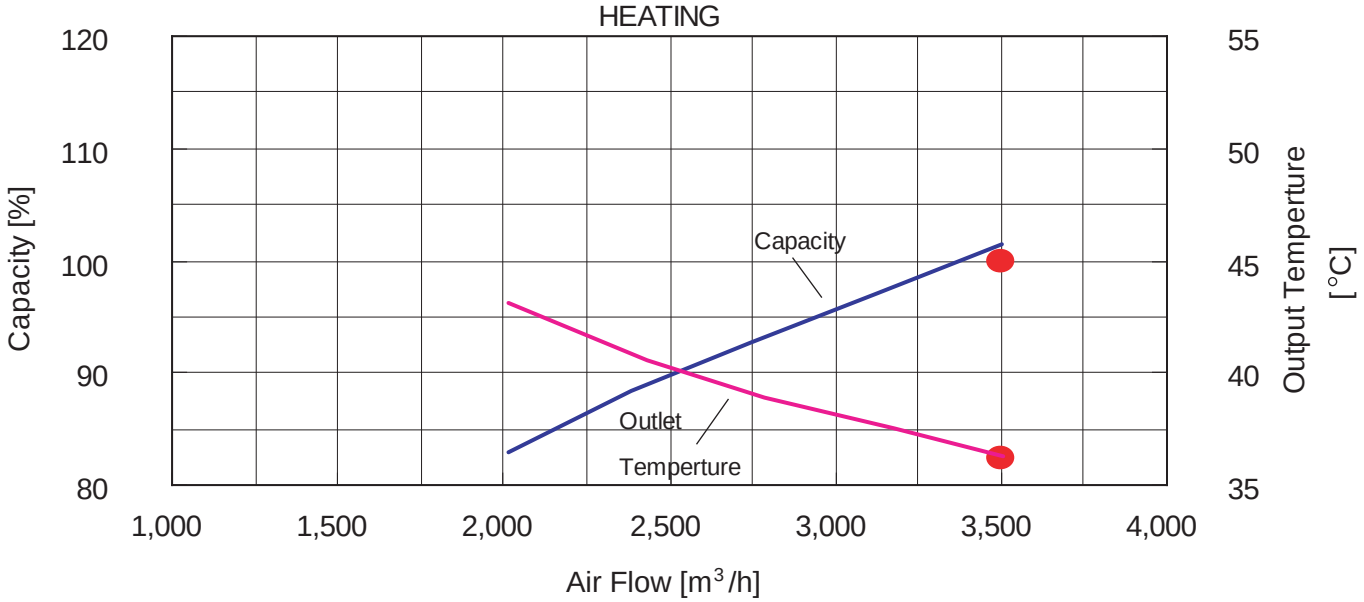

INDOOR UNIT

■MODEL : ARXC90

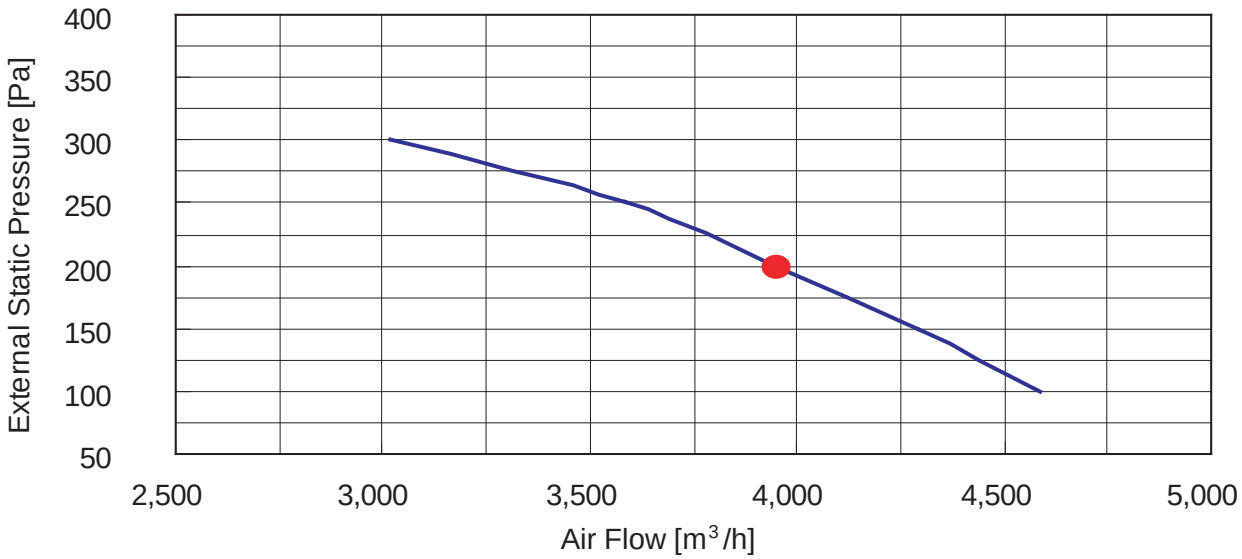

COOLING

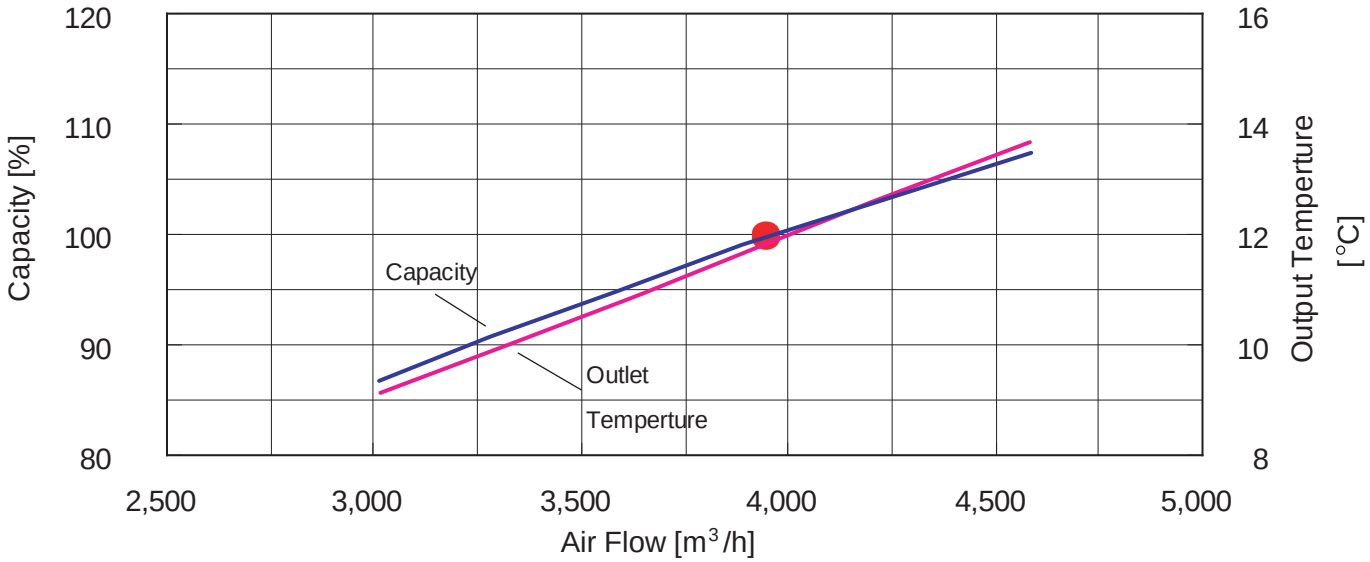

HEATING

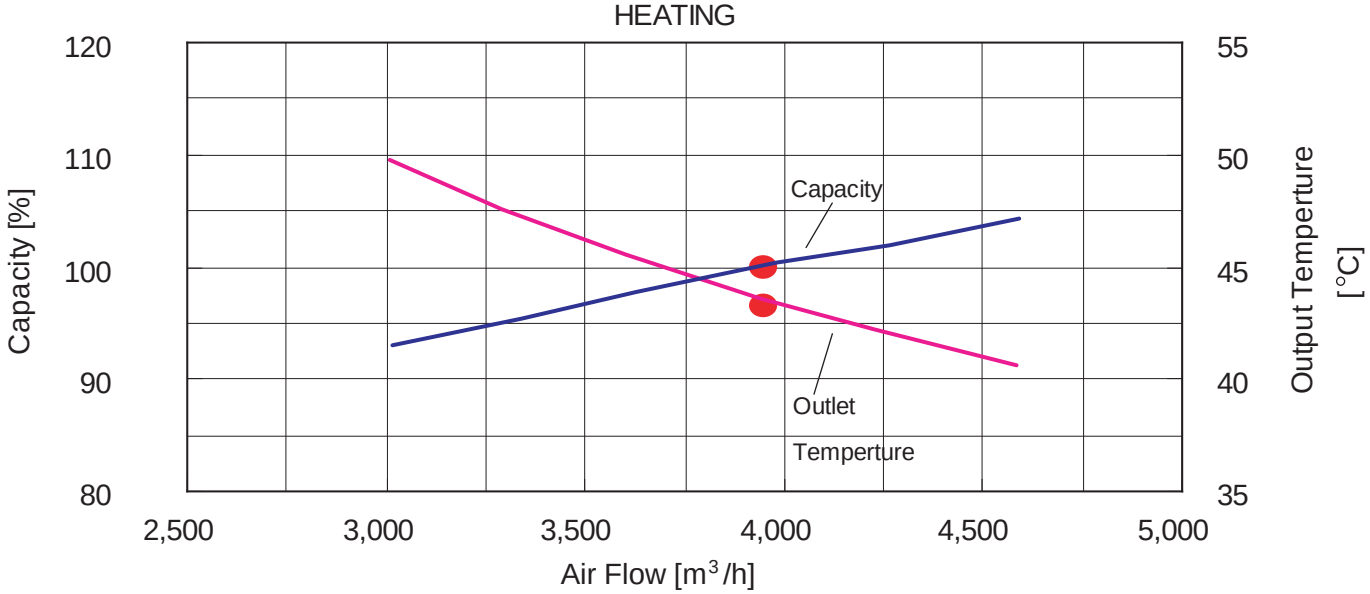

4-8-5. COMPACT CASSETTE TYPE (DUCT CONNECTION)

■ MODELS : AUXB07, AUXB09, AUXB12, AUXB14, AUXB18

● OUTLET AIR

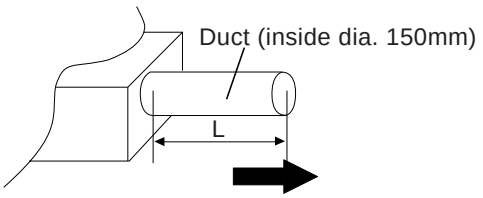

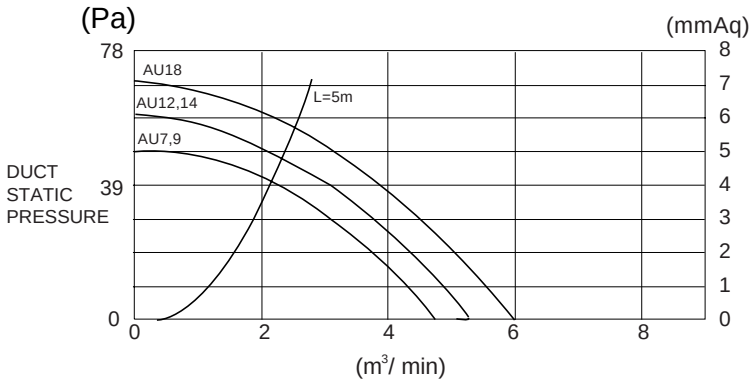

● FRESH AIR

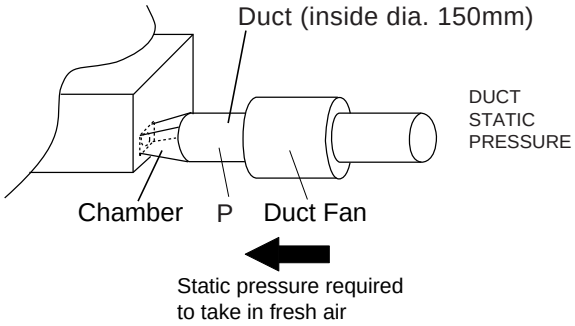

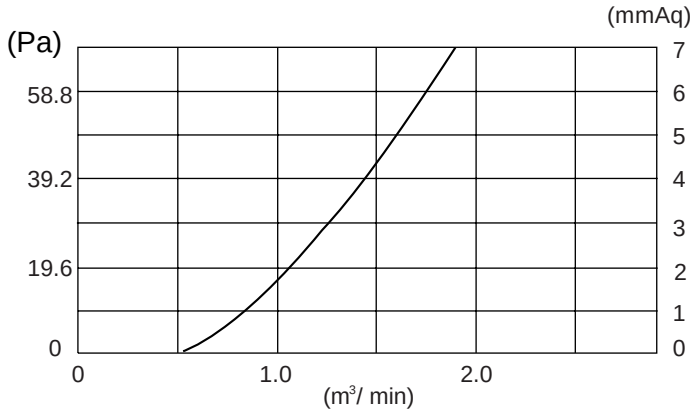

● DIMENSION

Outlet air port

Unit : mm

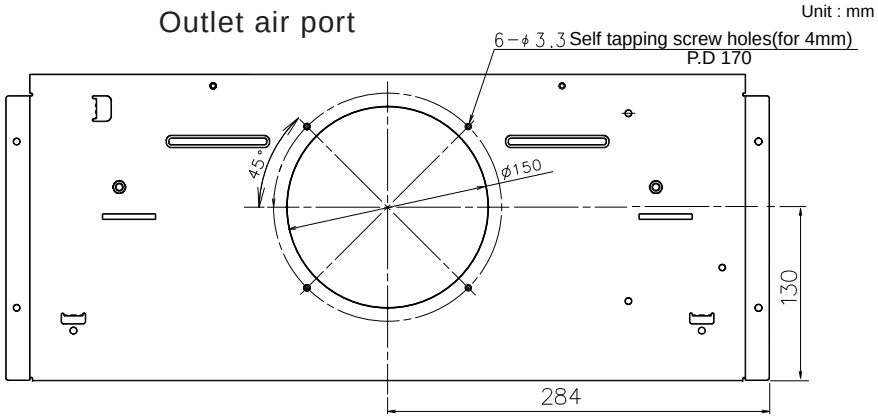

Fresh air port

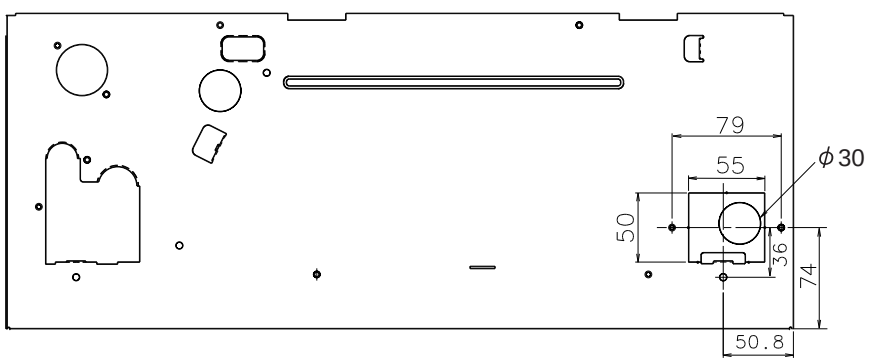

4-8-6. CASSETTE TYPE (DUCT CONNECTION)

■ MODELS : AU*A20, AU*A25, AU*A30

● OUTLET AIR

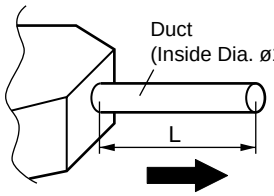

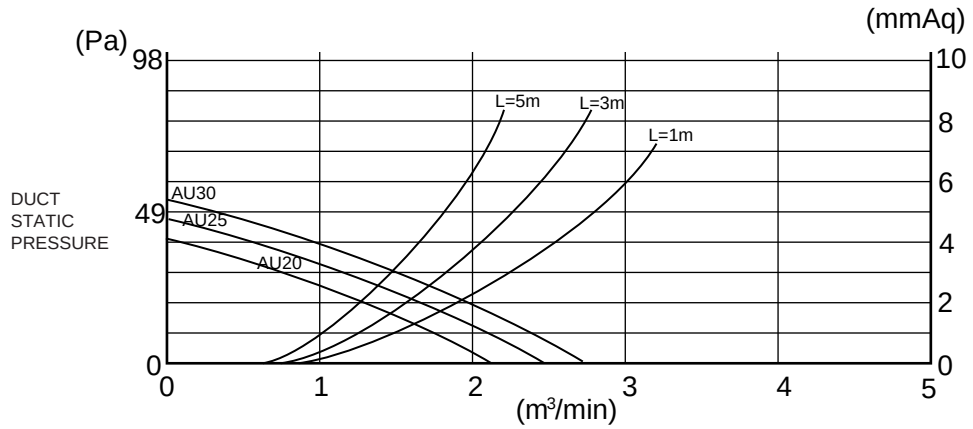

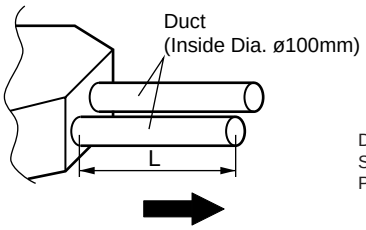

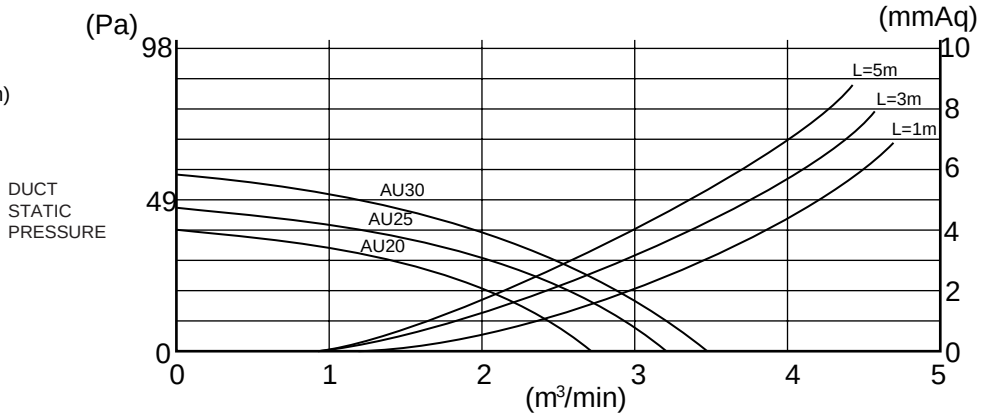

● FRESH AIR

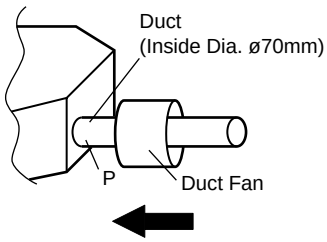

Static pressure required
to take in fresh air

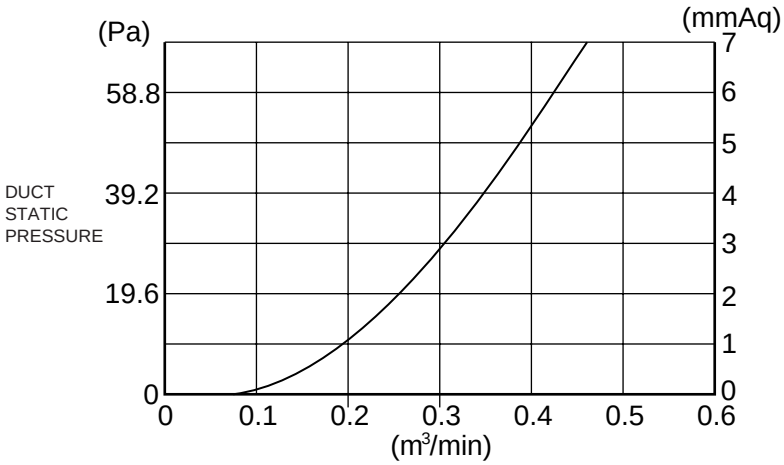

● DIMENSION

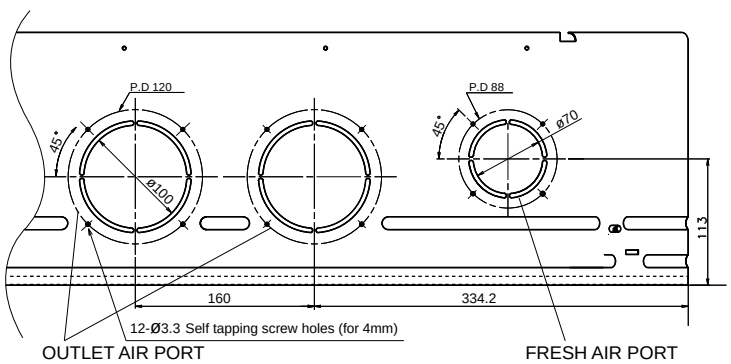

INDOOR UNIT

■ MODELS : AU*A36, AU*A45, AU*A54

● OUTLET AIR

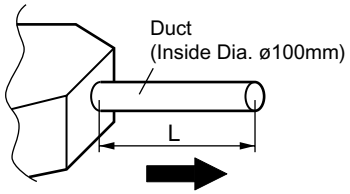

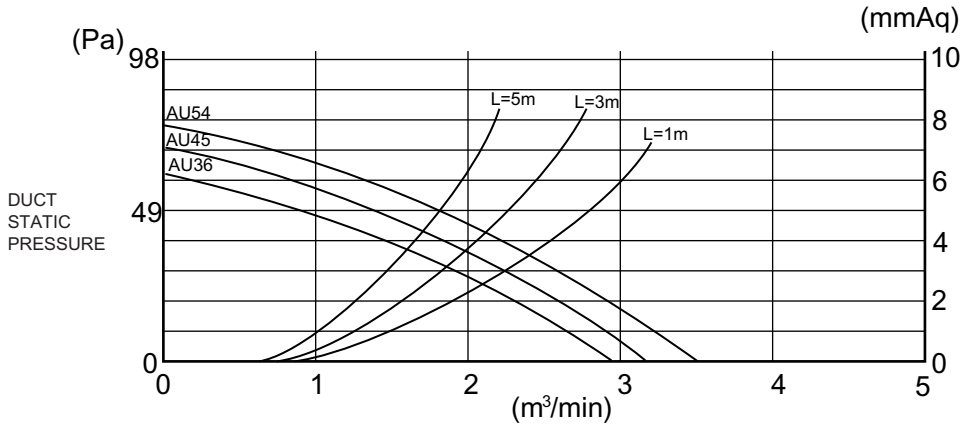

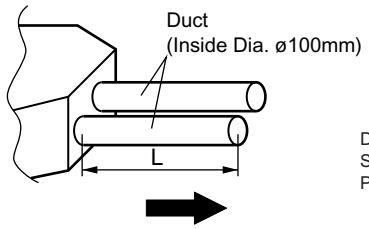

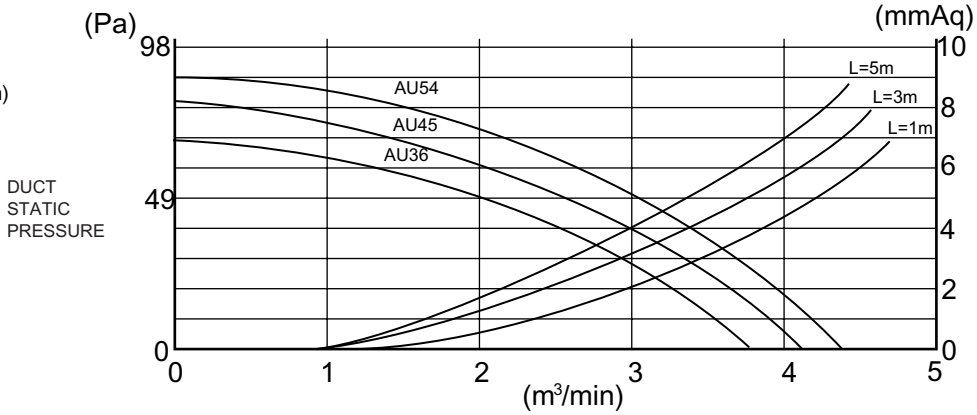

● FRESH AIR

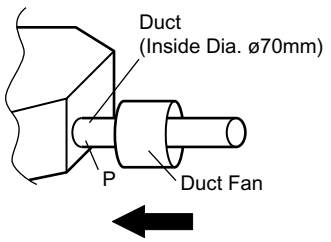

Static pressure required
to take in fresh air

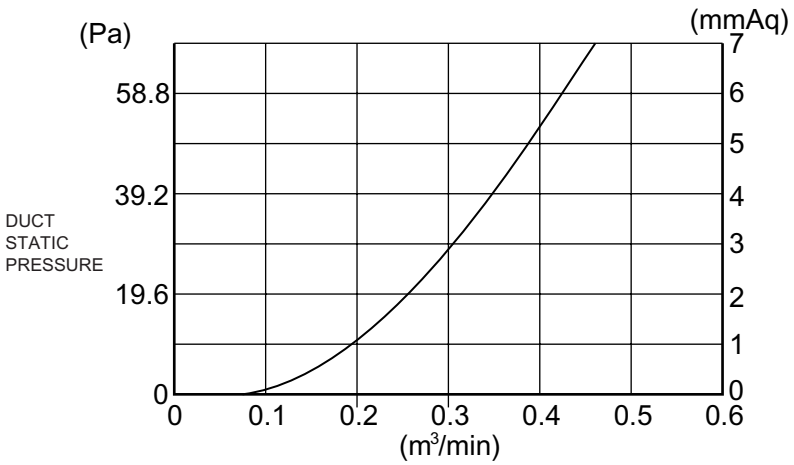

● DIMENSION

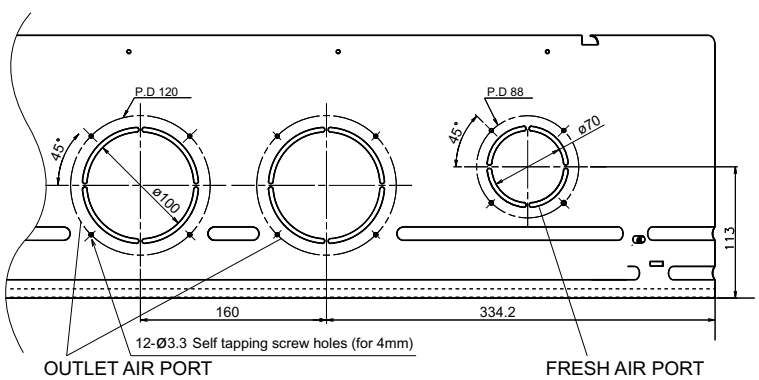

4-8-7. CEILING TYPE (FRESH AIR)

■ MODELS : AB∗A30, AB∗A36, AB∗A45, AB∗A54

● FRESH AIR CHARACTERISTIC

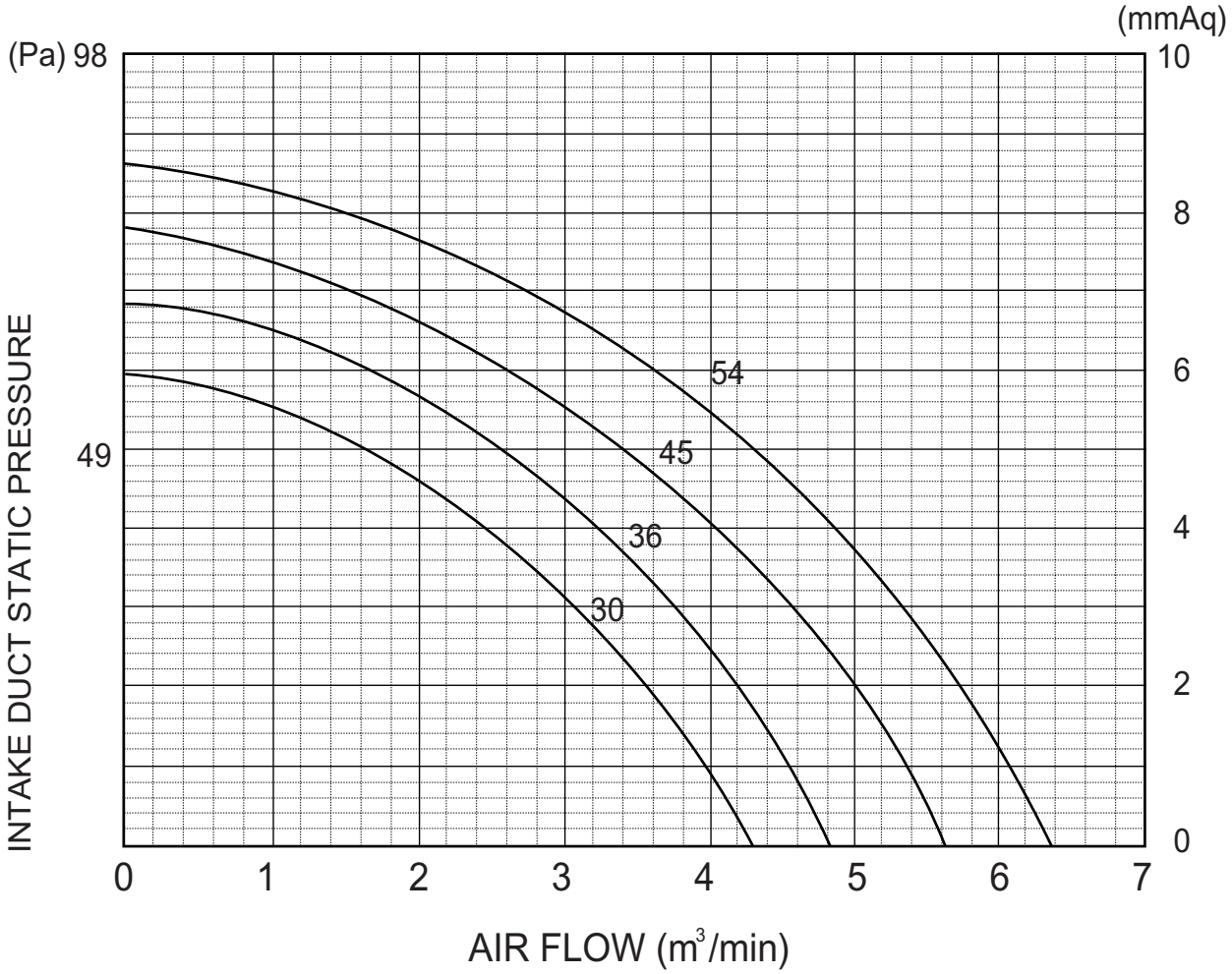

INDOOR UNIT

4-9. AIR FLOW

TYPE	MODEL	AIRFLOW			
			m^3/h	L/s	CFM
Compact Cassette	AUXB07	High	530	147	312
		Med	480	133	283
		Low	410	114	241
	AUXB09	High	530	147	312
		Med	480	133	283
		Low	410	114	241
	AUXB12	High	580	161	341
		Med	520	144	306
		Low	460	128	271
	AUXB14	High	580	161	341
		Med	520	144	306
		Low	460	128	271
	AUXB18	High	640	178	377
		Med	540	150	318
		Low	470	131	277
Cassette	AU*A20	High	1,000	278	589
		Med	840	233	494
		Low	700	194	412
	AU*A25	High	1,100	306	647
		Med	940	261	553
		Low	780	217	459
	AU*A30	High	1,250	347	736
		Med	1,050	292	618
		Low	840	233	494
	AU*A36	High	1,500	417	883
		Med	1,300	361	765
		Low	1,100	306	647
	AU*A45	High	1,550	431	912
		Med	1,350	375	795
		Low	1,100	306	647
	AU*A54	High	1,700	472	1,001
		Med	1,420	394	836
		Low	1,200	333	706
Compact Duct	ARXB07	High	330	92	194
		Med	300	83	177
		Low	270	75	159
	ARXB09	High	370	103	218
		Med	340	94	200
		Low	310	86	182
	ARXB12	High	560	156	330
		Med	500	139	294
		Low	420	117	247
	ARXB14	High	610	169	359
		Med	550	153	324
		Low	470	131	277
	ARXB18	High	950	264	559
		Med	790	219	465
		Low	620	172	365
Low Static Pressure Duct	ARXB25	High	1,090	303	642
		Med	970	269	571
		Low	870	242	512
	ARXB30	High	1,200	333	706
		Med	1,090	303	642
		Low	970	269	571
	ARXB36	High	1,440	400	848
		Med	1,270	353	747
		Low	1,160	322	683
	ARXB45	High	1,580	439	930
		Med	1,450	403	853
		Low	1,320	367	777
Duct	ARXA25	High	1,100	306	647
		Med	1,000	278	589
		Low	900	250	530
	ARXA30	High	1,400	389	824
		Med	1,300	361	765
		Low	1,200	333	706
	ARXA36	High	1,750	486	1,030
		Med	1,650	458	971
		Low	1,550	431	912
	ARXA45	High	1,800	500	1,059
		Med	1,600	444	942
		Low	1,500	417	883
High Static Pressure Duct	ARXC36	High	2,500	694	1,471
		Med	1,950	542	1,148
		Low	1,450	403	853
	ARXC45	High	3,500	972	2,060
		Med	3,000	833	1,766
		Low	2,460	683	1,448
	ARXC60	High	3,500	972	2,060
		Med	3,000	833	1,766
		Low	2,460	683	1,448
	ARXC90	High	3,950	1,097	2,325

TYPE	MODEL	AIRFLOW			
			m^3/h	L/s	CFM
Floor/ Ceiling	AB*A12	High	640	178	377
		Med	560	156	330
		Low	480	133	283
	AB*A14	High	640	178	377
		Med	560	156	330
		Low	480	133	283
	AB*A18	High	780	217	459
		Med	650	181	383
		Low	550	153	324
	AB*A24	High	880	244	518
		Med	740	206	436
		Low	630	175	371
Ceiling	AB*A30	High	1,450	403	853
		Med	1,280	356	753
		Low	980	272	577
	AB*A36	High	1,660	461	977
		Med	1,500	417	883
		Low	1,270	353	747
	AB*A45	High	1,850	514	1,089
		Med	1,660	461	977
		Low	1,430	397	842
	AB*A54	High	2,200	611	1,295
		Med	2,000	556	1,177
		Low	1,800	500	1,059
Compact Wall Mounted (Comfort model)	AS*E07	High	490	136	288
		Med	450	125	265
		Low	370	103	218
	AS*E09	High	490	136	288
		Med	450	125	265
		Low	370	103	218
	AS*E12	High	560	156	330
		Med	480	133	283
		Low	420	117	247
	AS*E14	High	600	167	353
		Med	490	136	288
		Low	420	117	247
Wall Mounted	AS*A18	High	800	222	471
		Med	650	181	383
		Low	550	153	324
	AS*A24	High	970	269	571
		Med	870	242	512
		Low	750	208	441
	AS*A30	High	1,040	289	612
		Med	910	253	536
		Low	730	203	430
Ceiling Wall	AW*A07	High	380	106	224
		Med	330	92	194
		Low	290	81	171
	AW*A09	High	480	133	283
		Med	420	117	247
		Low	390	108	230
	AW*A12	High	600	167	353
		Med	520	144	306
		Low	470	131	277
	AW*A14	High	650	181	383
		Med	570	158	335
		Low	490	136	288
	AW*A18	High	760	211	447
		Med	660	183	388
		Low	560	156	330
	AW*A24	High	900	250	530
		Med	780	217	459
		Low	650	181	383
	AW*A30	High	950	264	559
		Med	870	242	512
		Low	780	217	459

Conversion Factor

1 m^3/h = 0.2778 L/s = 0.5886 CFM

3.6m^3/h = 1 L/s

1.699m^3/h = 1 CFM

INDOOR UNIT

INDOOR UNIT

4-10. NOISE LEVEL CURVE

4-10-1. COMPACT CASSETTE TYPE

■ MODEL : AUXB07

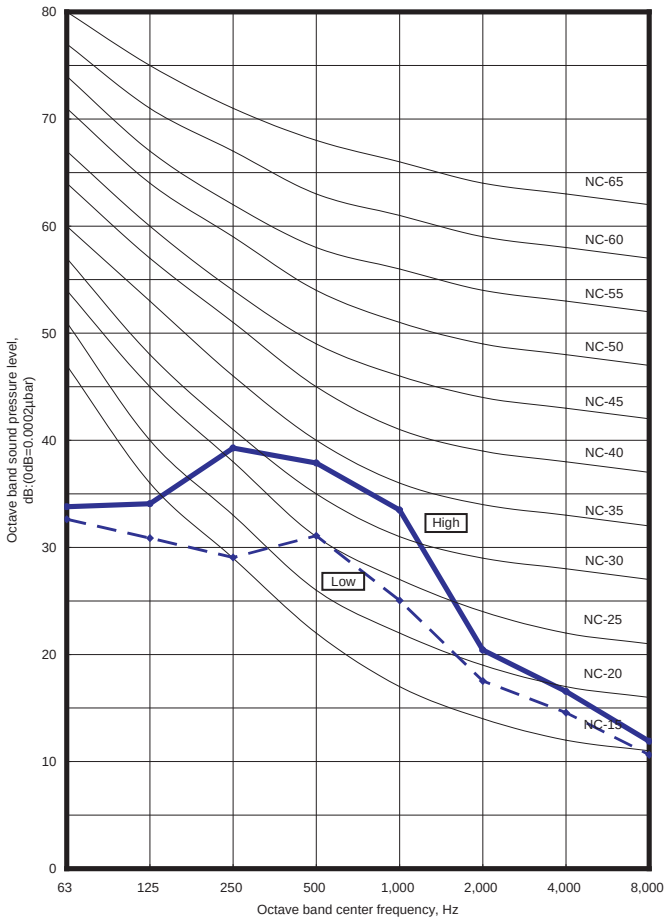

■ MODEL : AUXB09

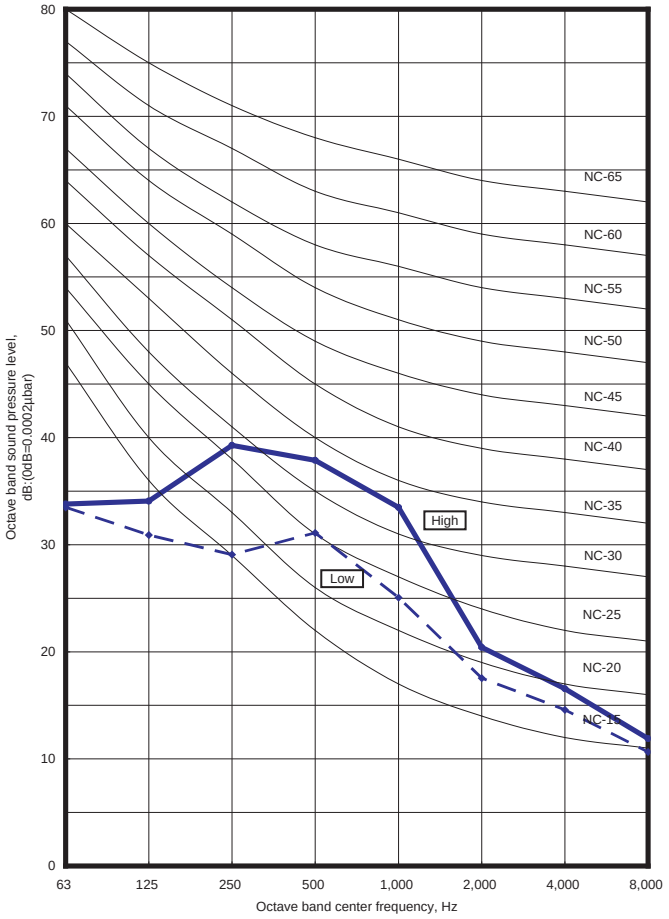

■ MODEL : AUXB12

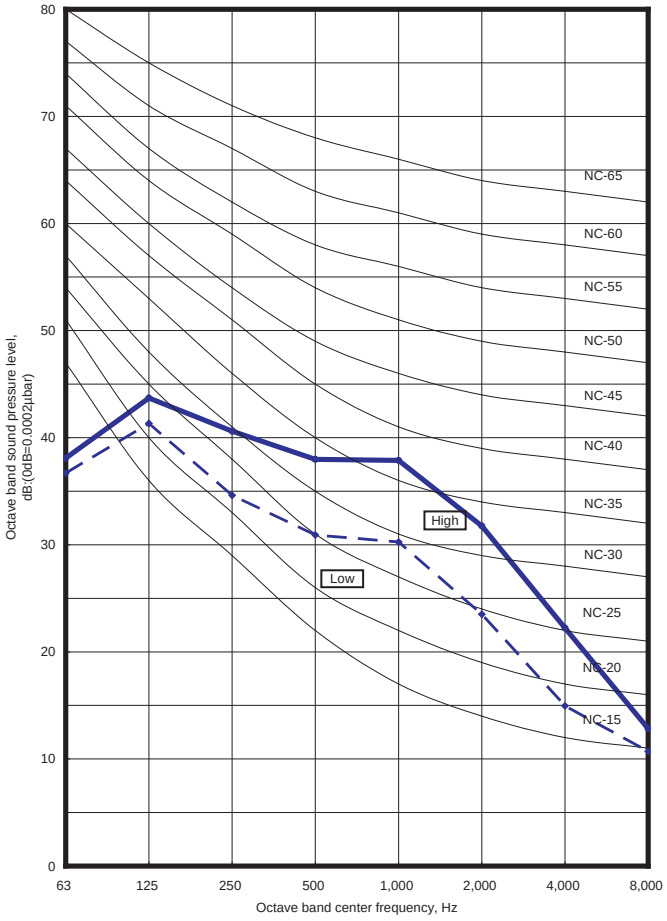

■ MODEL : AUXB14

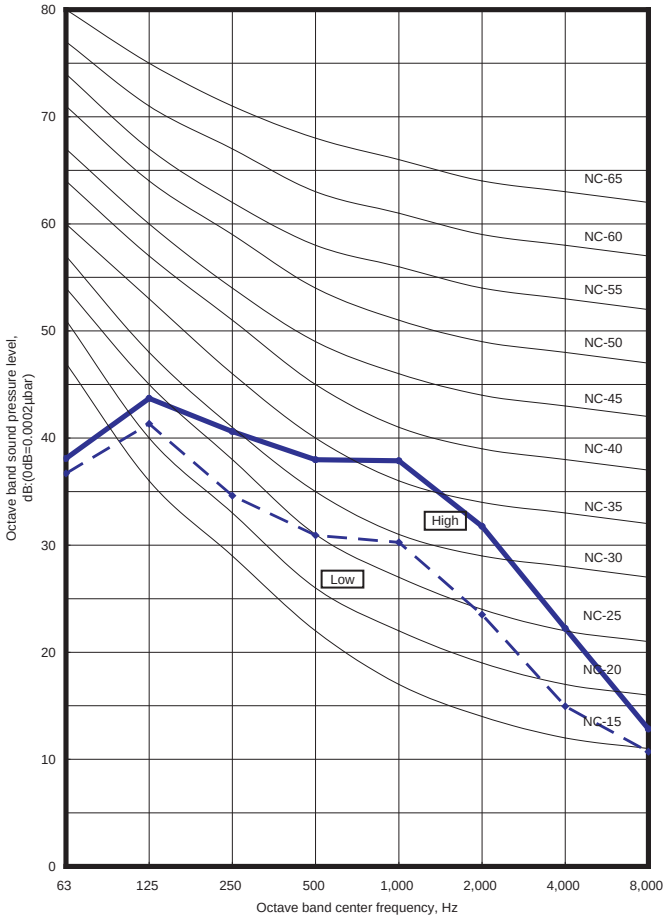

INDOOR UNIT

■ MODEL : AUXB18

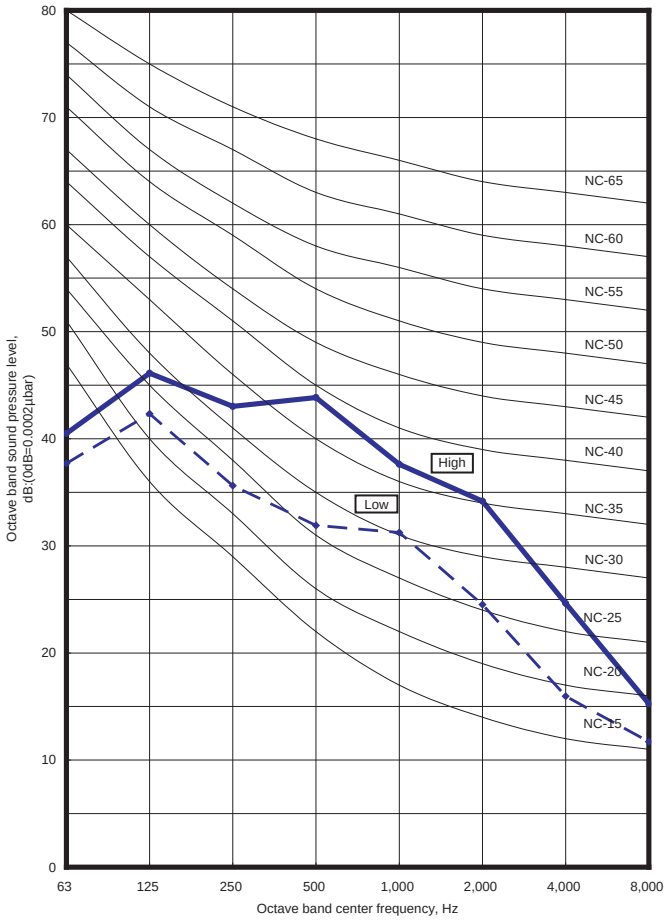

INDOOR UNIT

4-10-2. CASSETTE TYPE

■ MODEL : AU∗A20

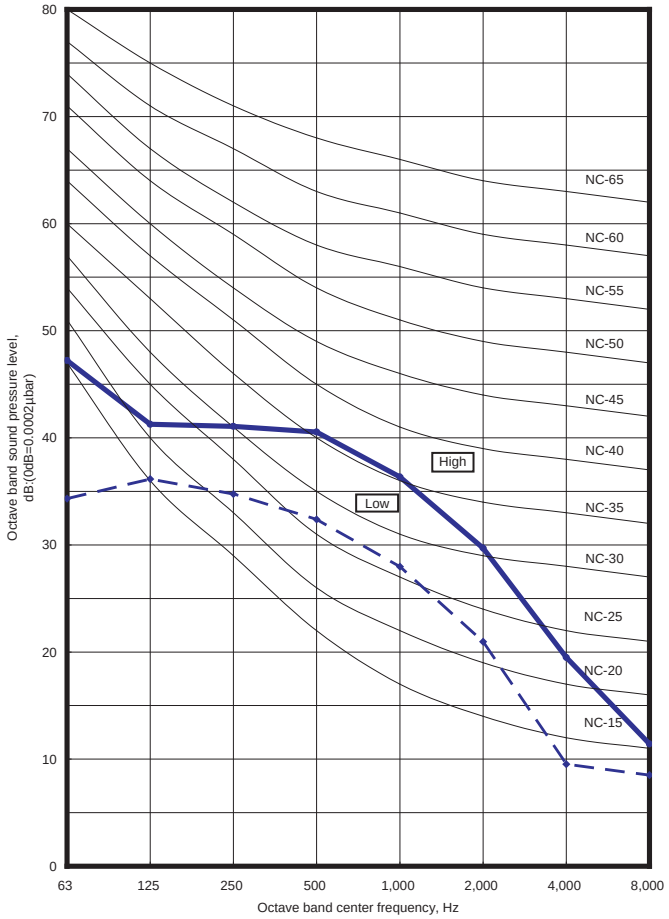

■ MODEL : AU∗A25

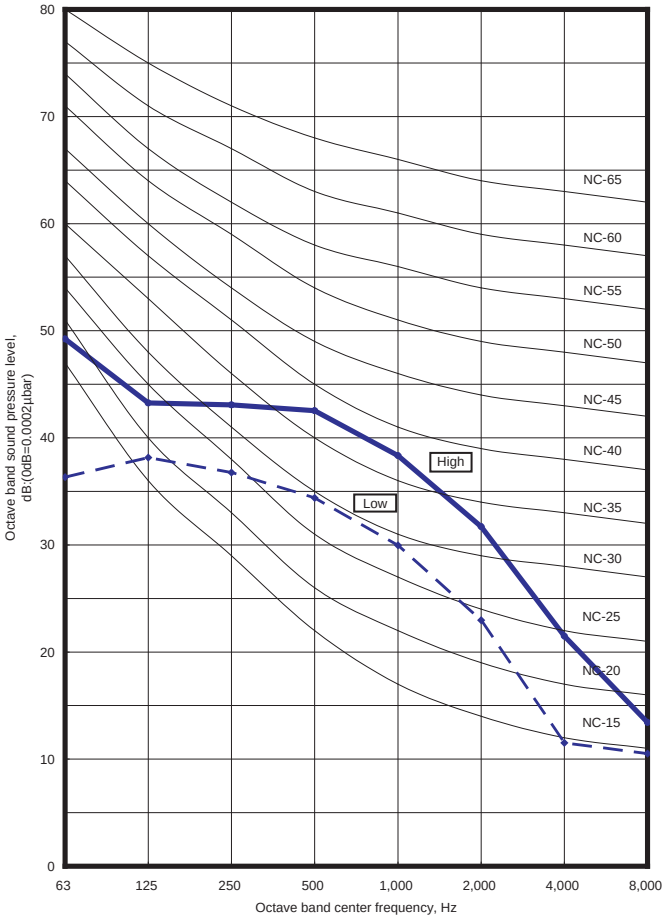

■ MODEL : AU∗A30

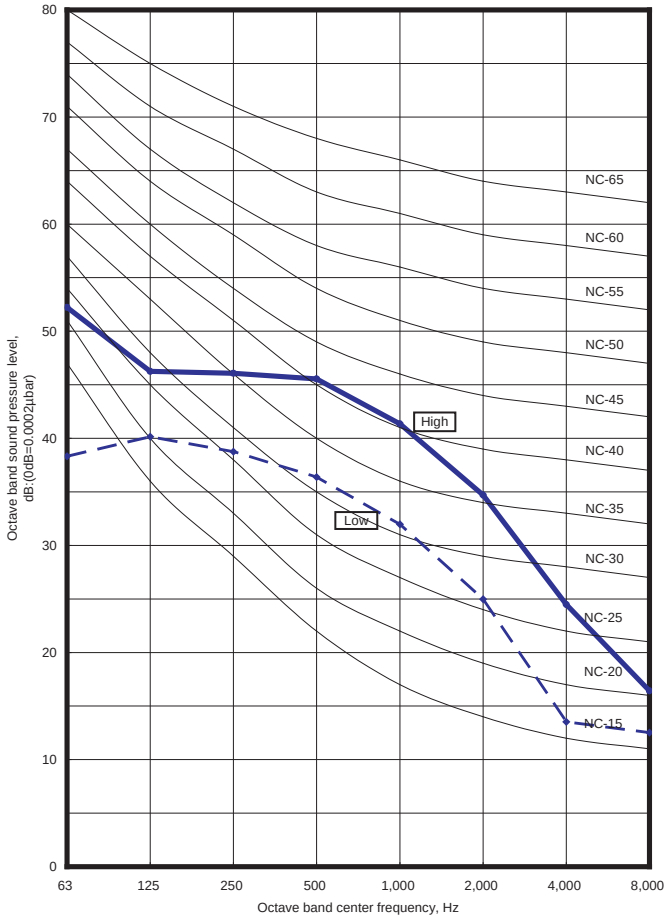

INDOOR UNIT

■ MODEL : AU∗A36

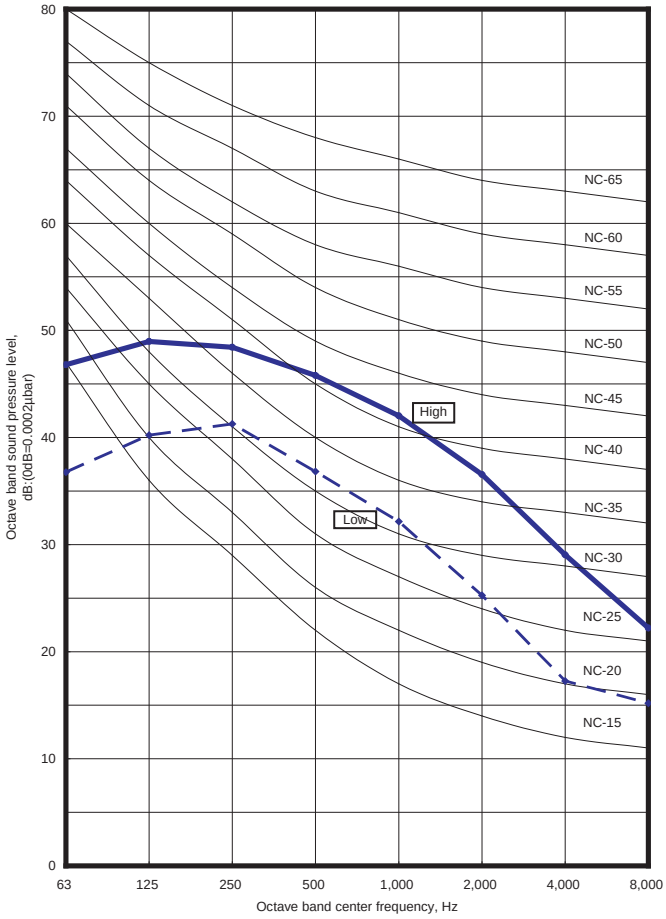

■ MODEL : AU∗A45

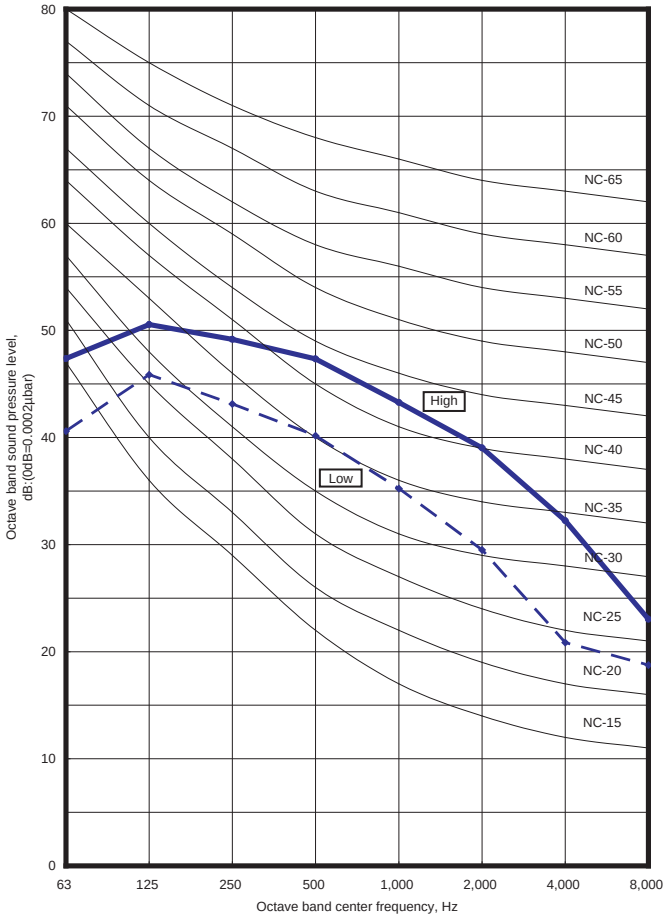

INDOOR UNIT

■ MODEL : AU∗A54

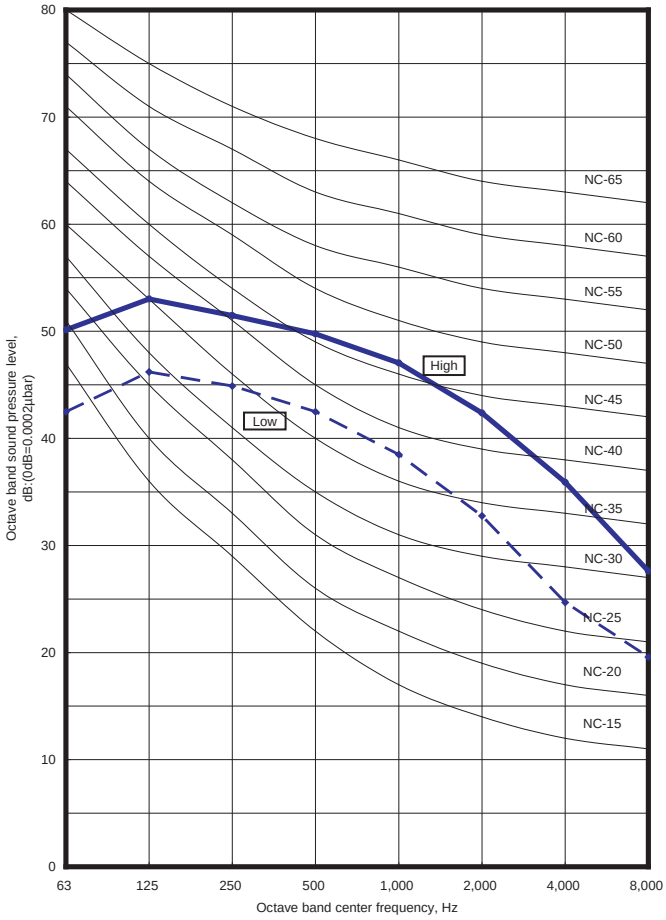

4-10-3. COMPACT DUCT TYPE

■ MODEL : ARXB07

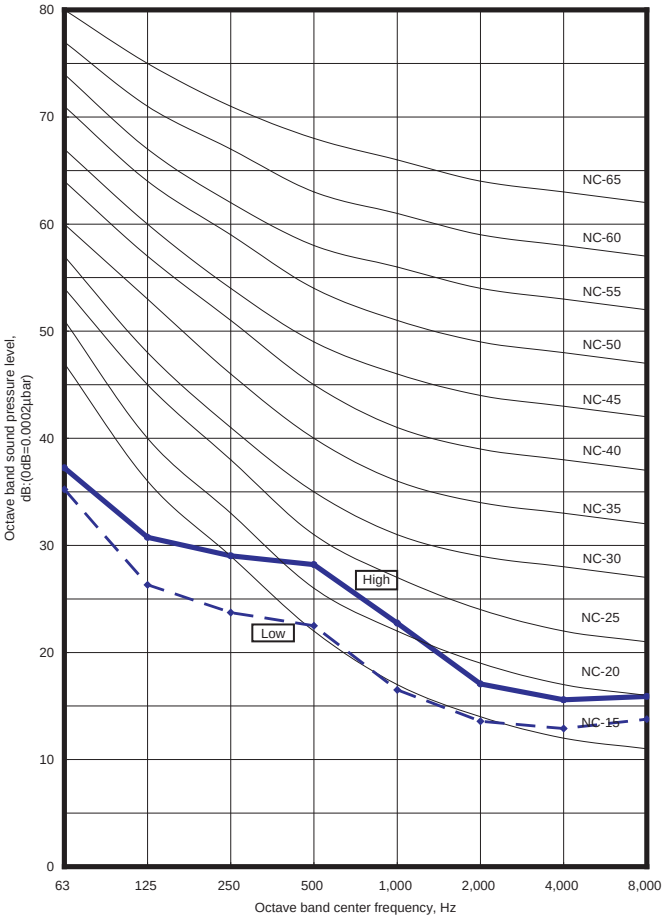

■ MODEL : ARXB09

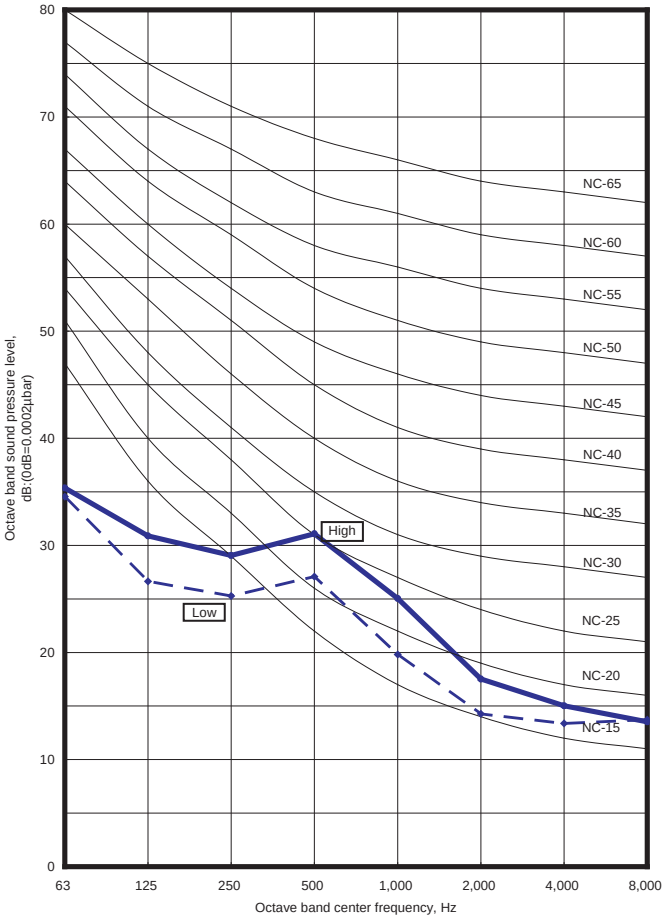

INDOOR UNIT

■ MODEL : ARXB12

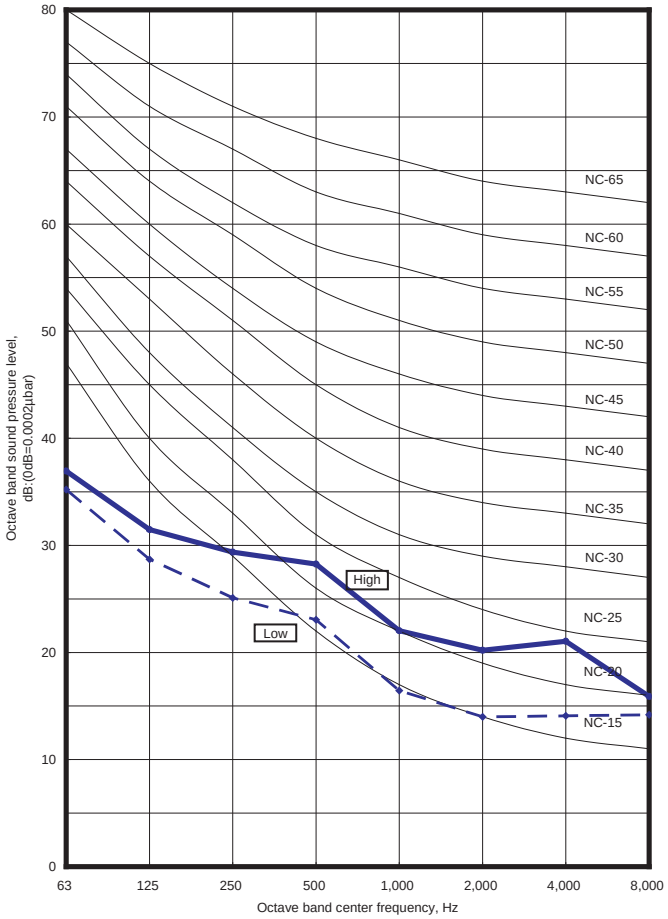

■ MODEL : ARXB14

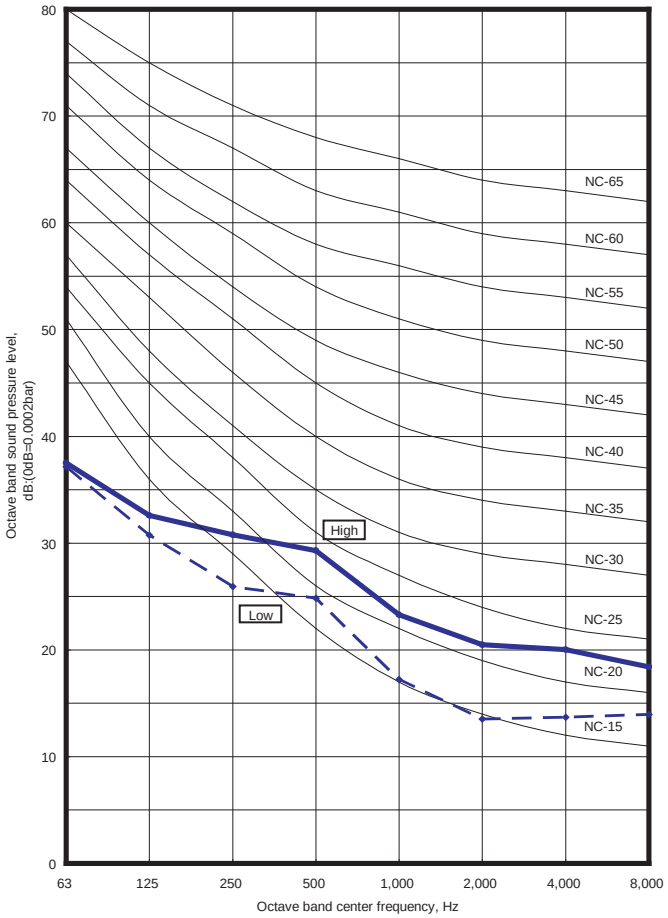

INDOOR UNIT

■ MODEL : ARXB18

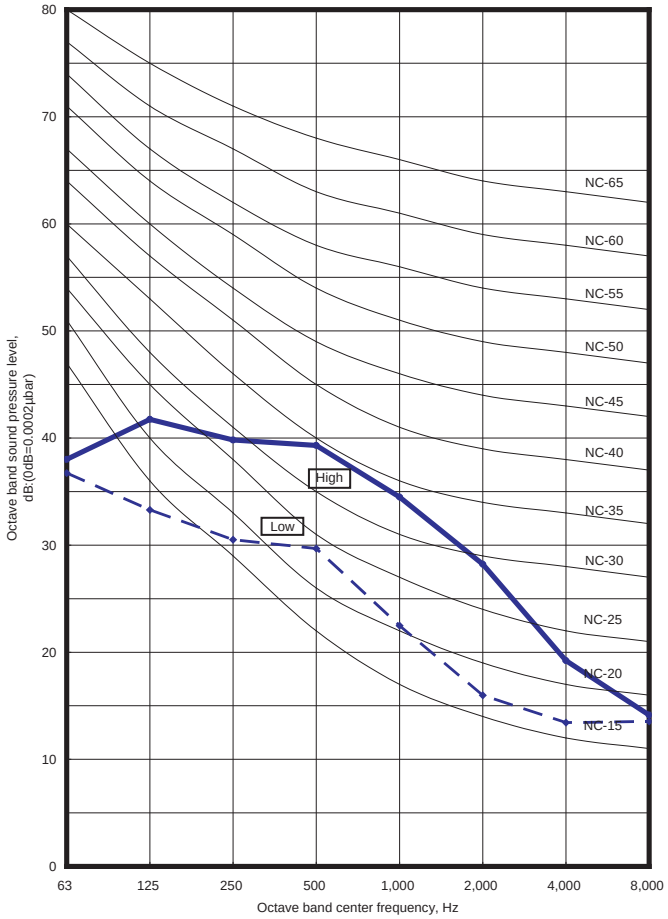

4-10-4. LOW STATIC PRESSURE DUCT TYPE

■ MODEL : ARXB25

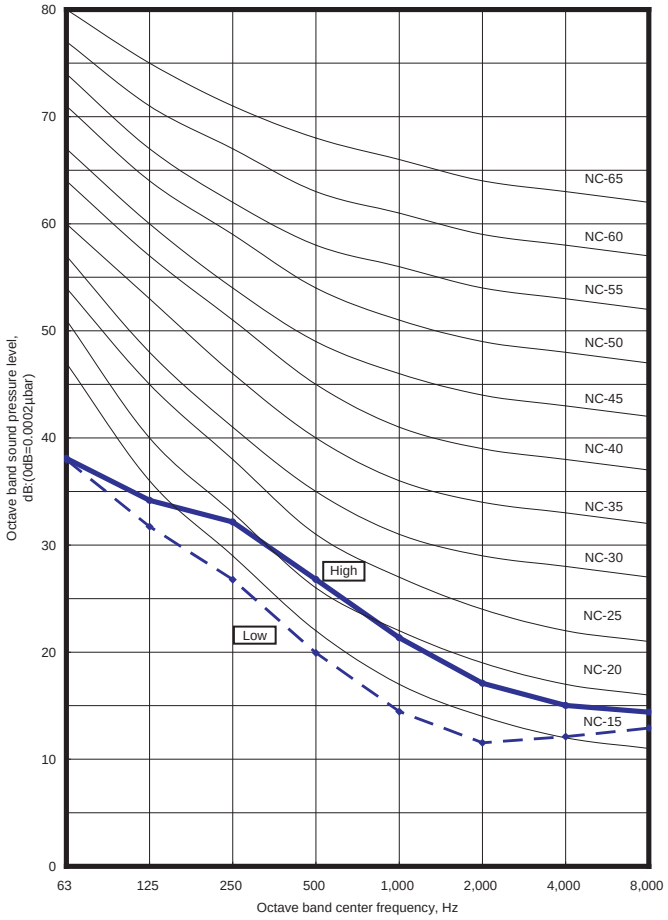

■ MODEL : ARXB30

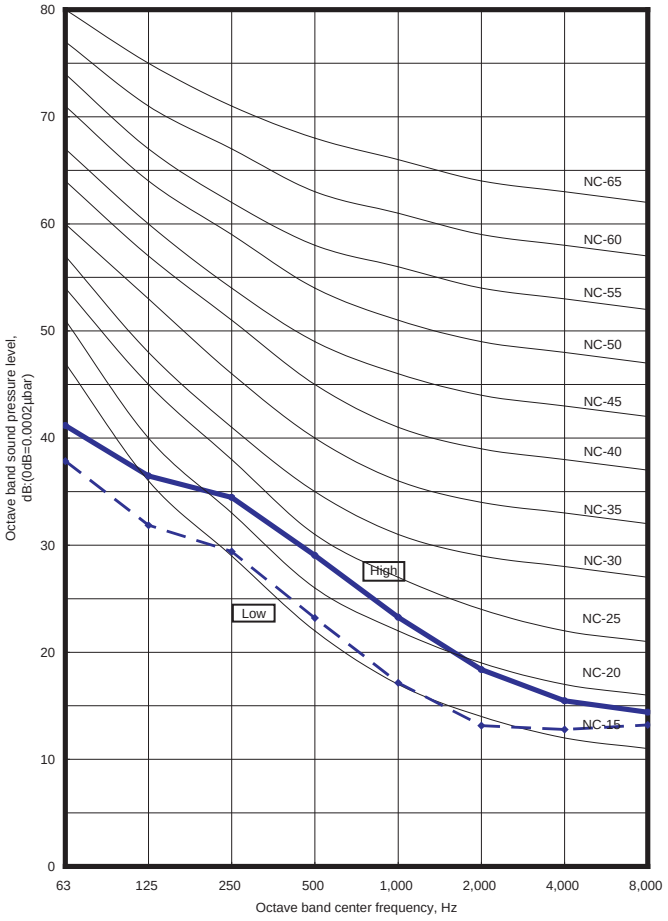

■ MODEL : ARXB36

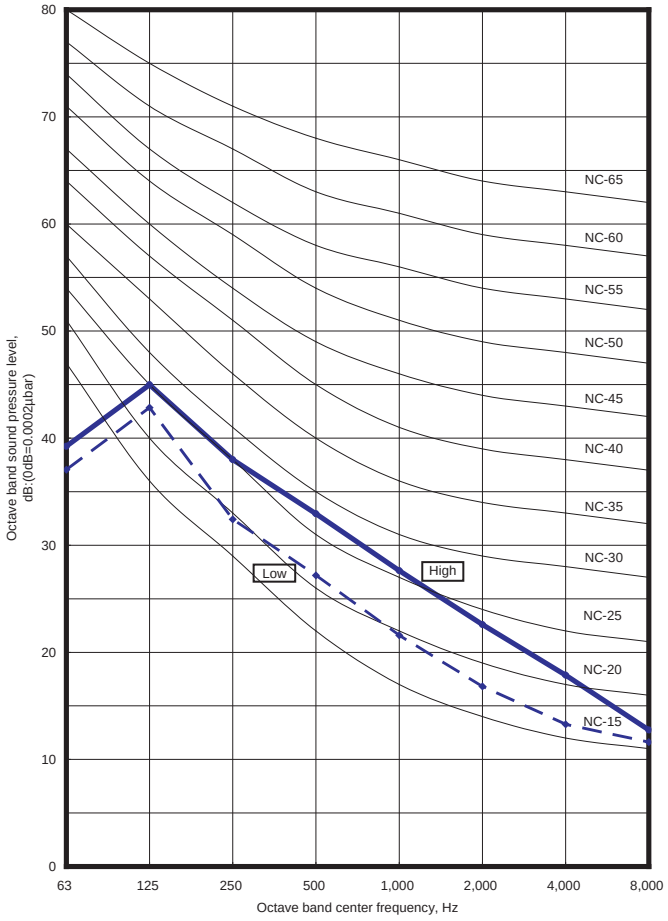

■ MODEL : ARXB45

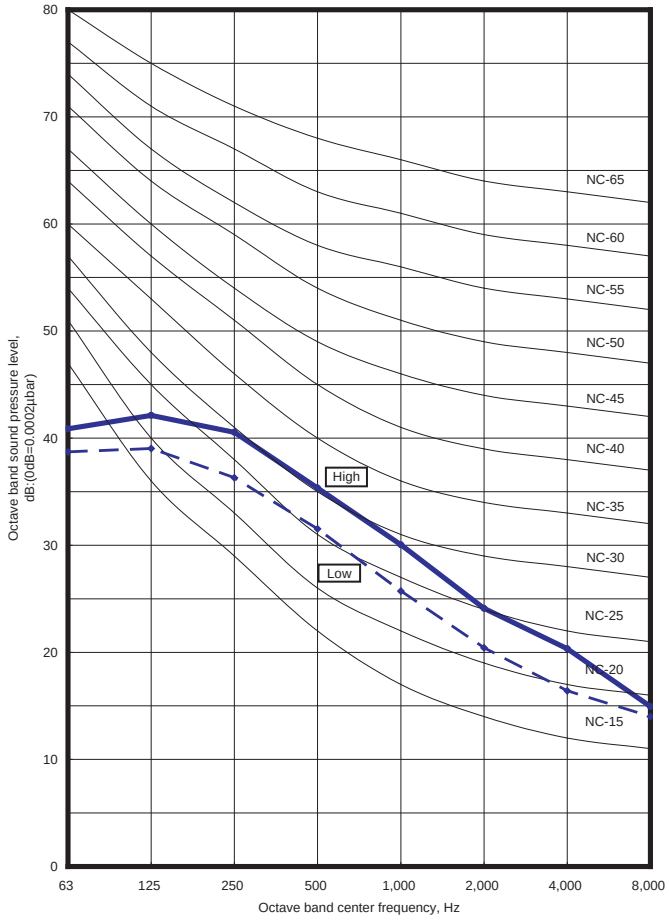

INDOOR UNIT

4-10-5. DUCT TYPE

■ MODEL : ARXA25

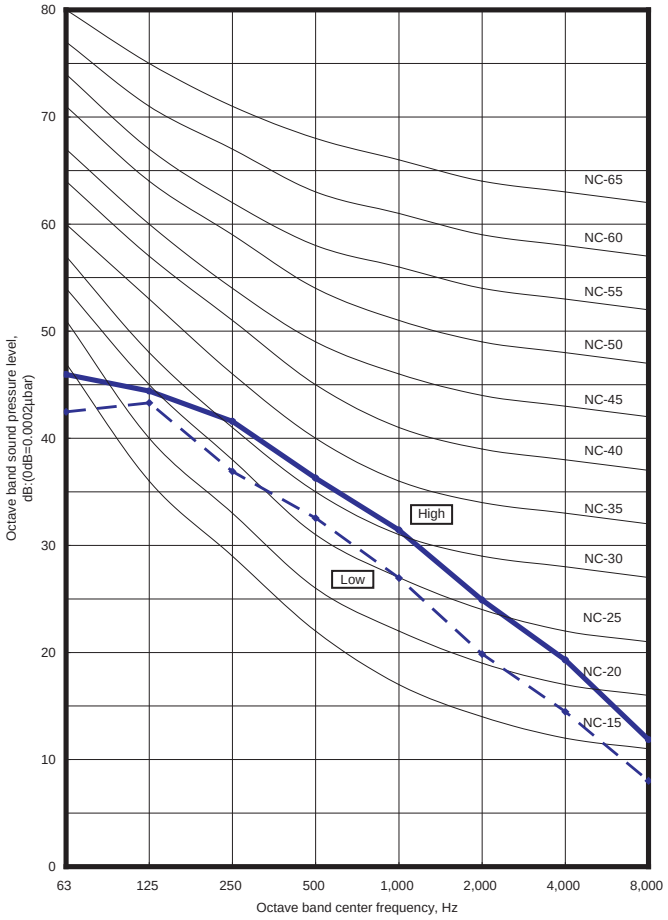

■ MODEL : ARXA30

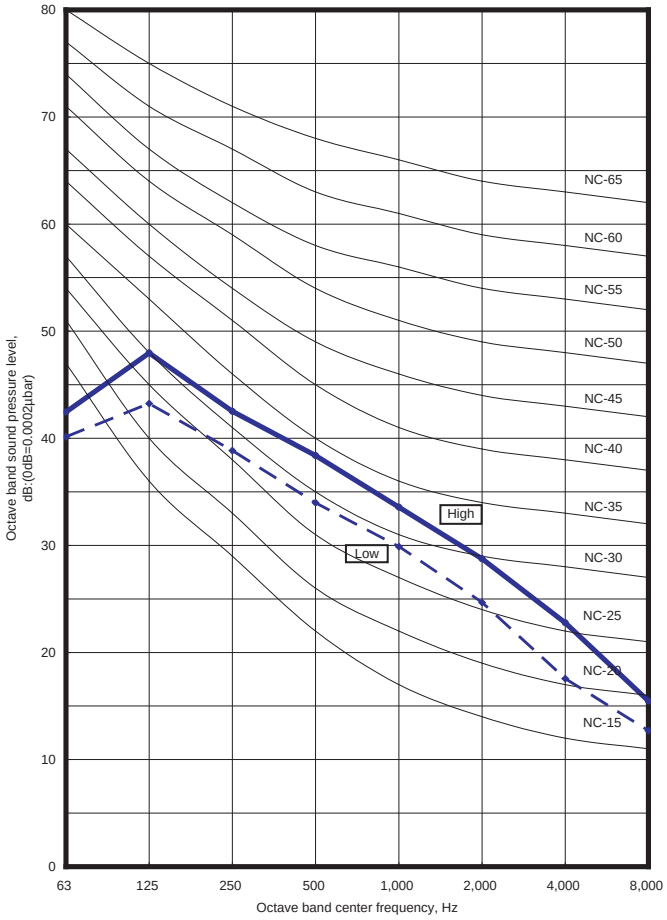

■ MODEL : ARXA36

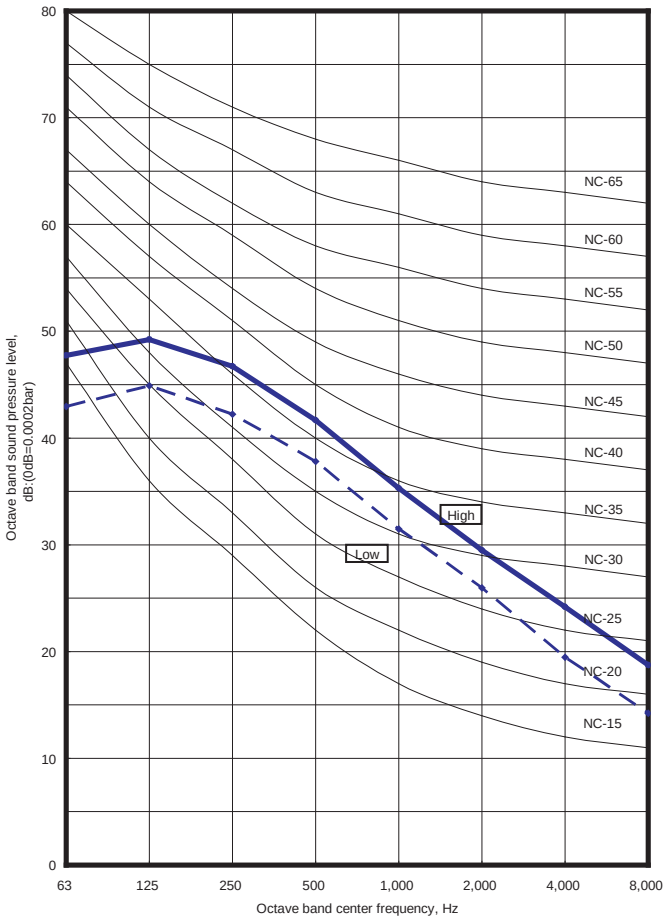

■ MODEL : ARXA45

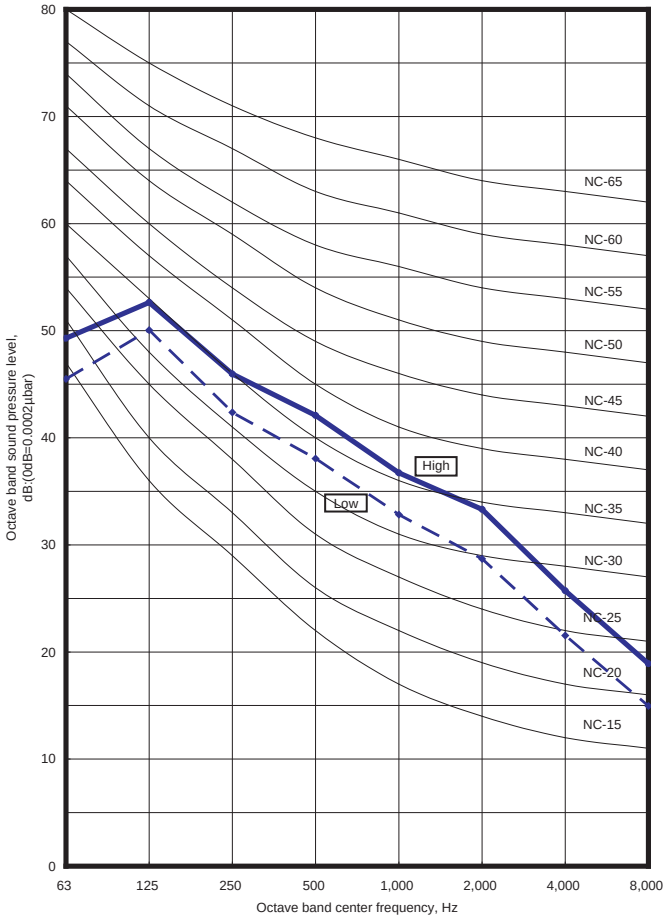

INDOOR UNIT

4-10-6. HIGH STATIC PRESSURE DUCT TYPE

■ MODEL : ARXC36

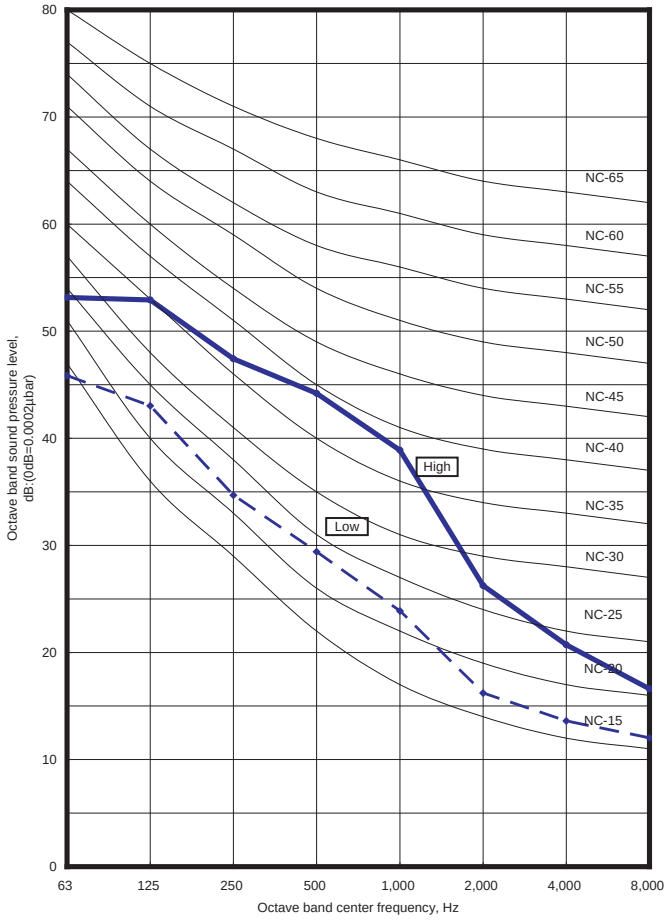

■ MODEL : ARXC45

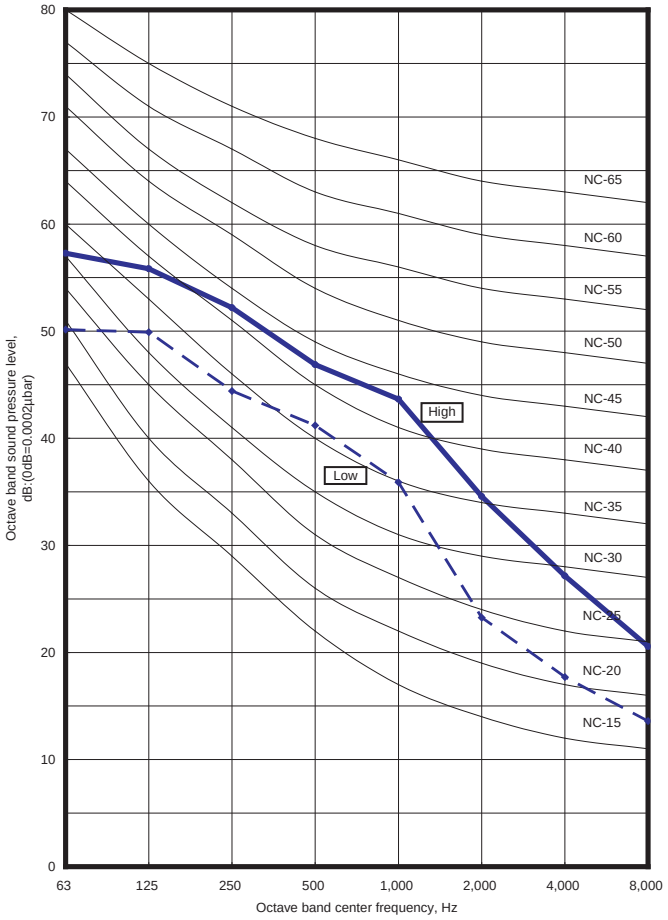

■ MODEL : ARXC60

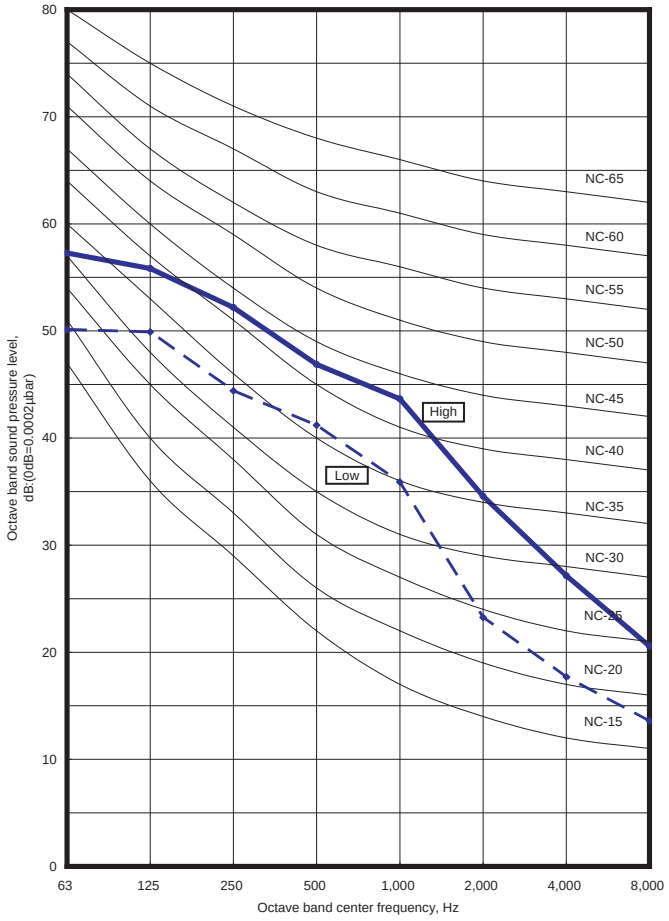

■ MODEL : ARXC90

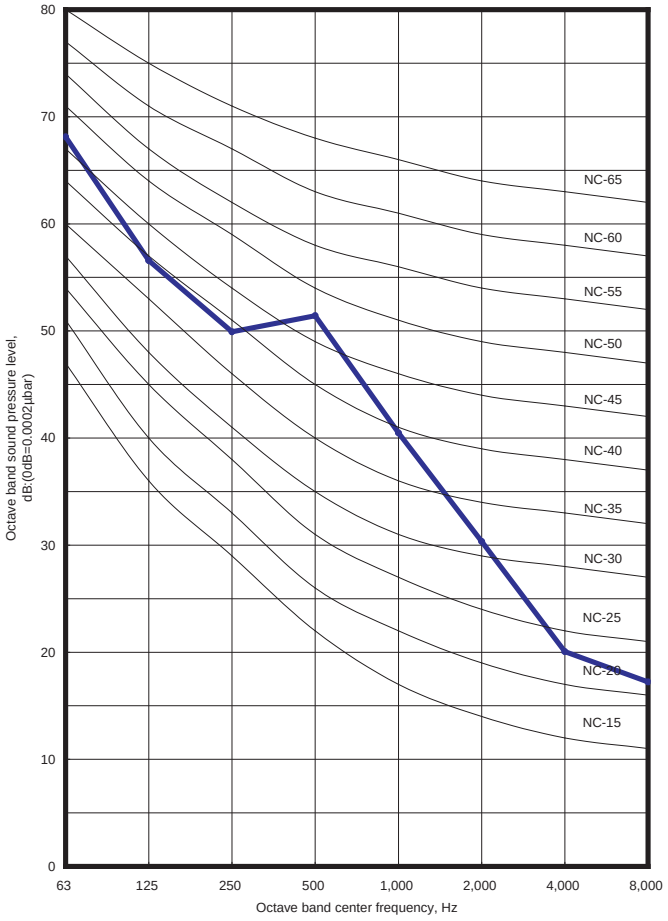

INDOOR UNIT

4-10-7. FLOOR / CEILING TYPE

■ MODELS : AB∗A12, AB∗A14

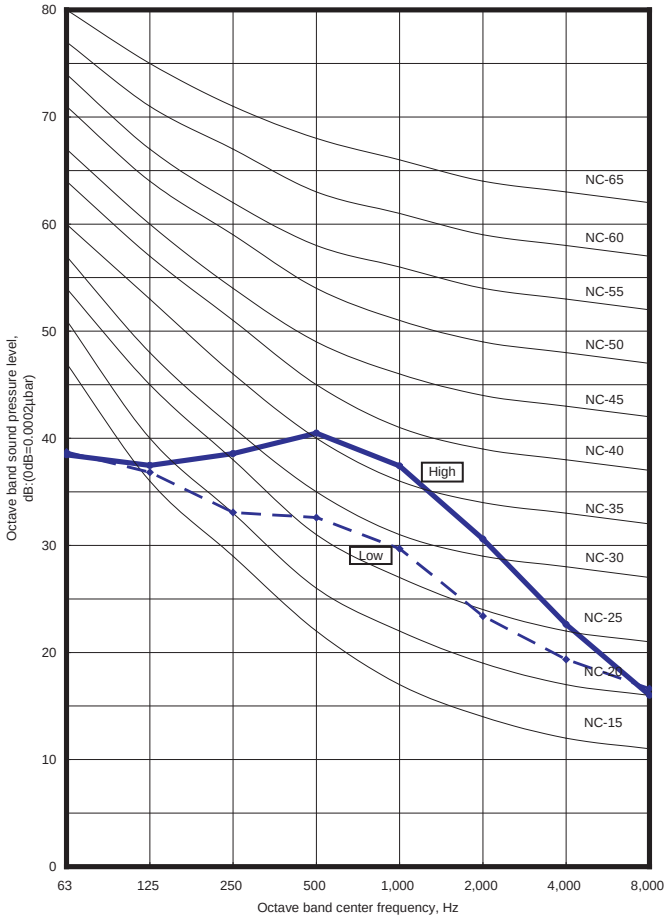

■ MODEL : AB∗A18

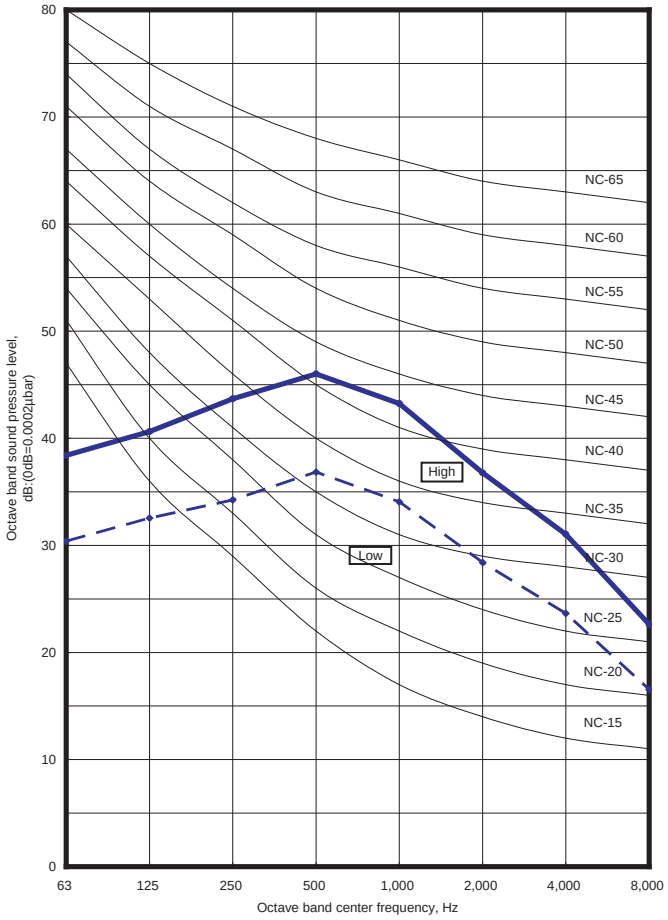

■ MODEL : AB∗A24

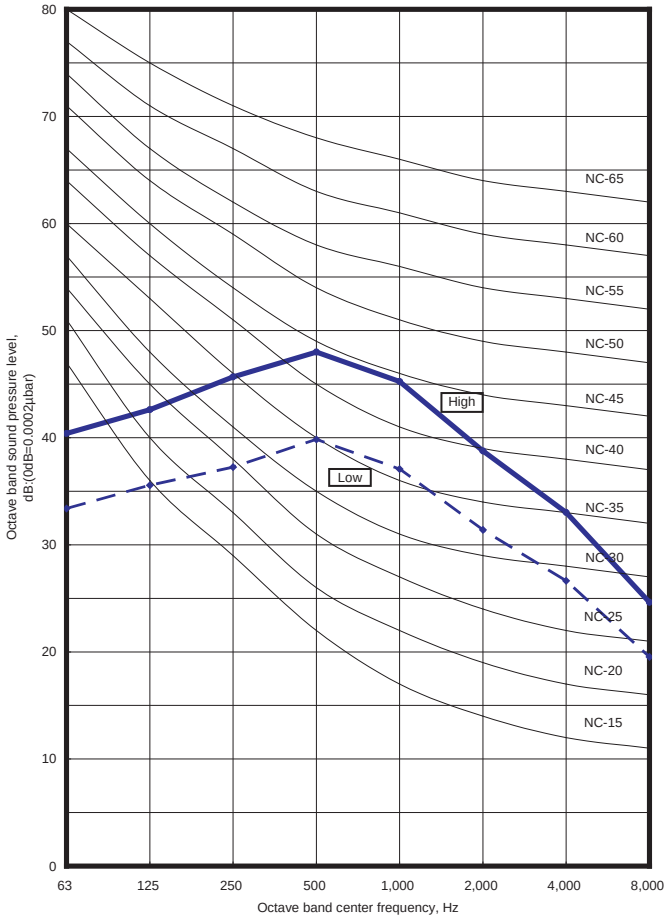

INDOOR UNIT

4-10-8. CEILING TYPE

■ MODEL : AB∗A30

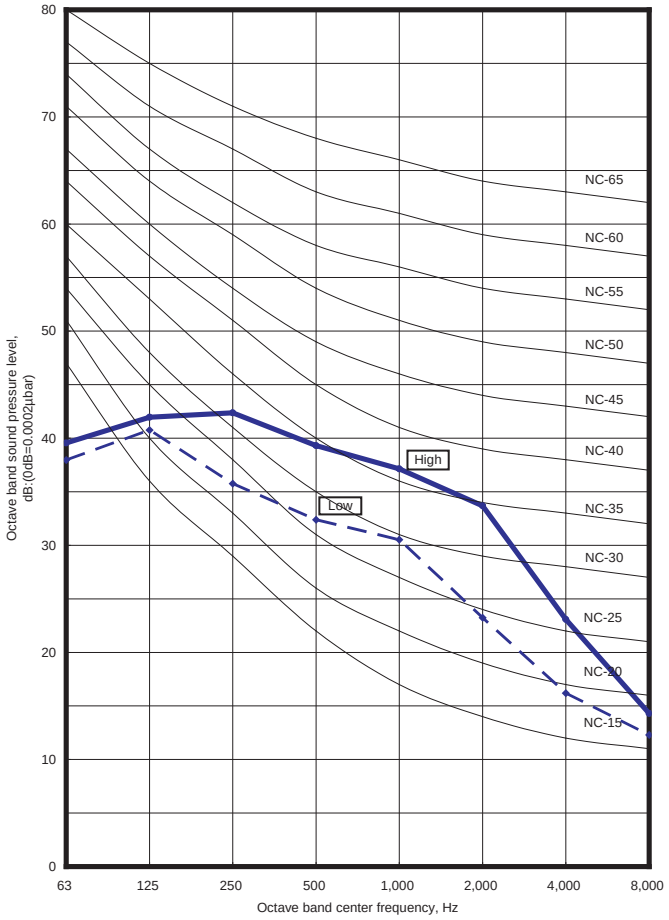

■ MODEL : AB∗A36

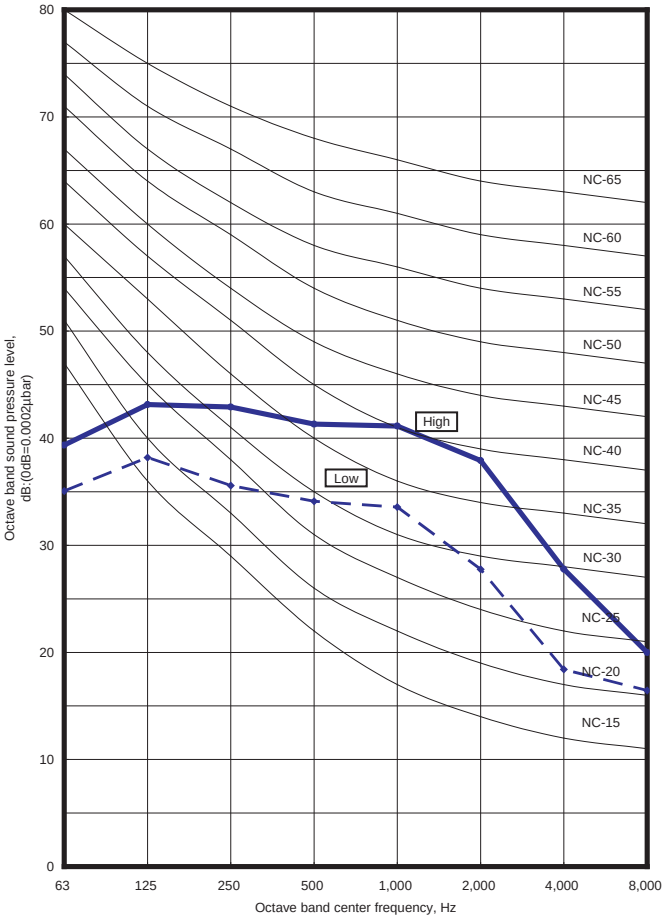

■ MODEL : AB∗A45

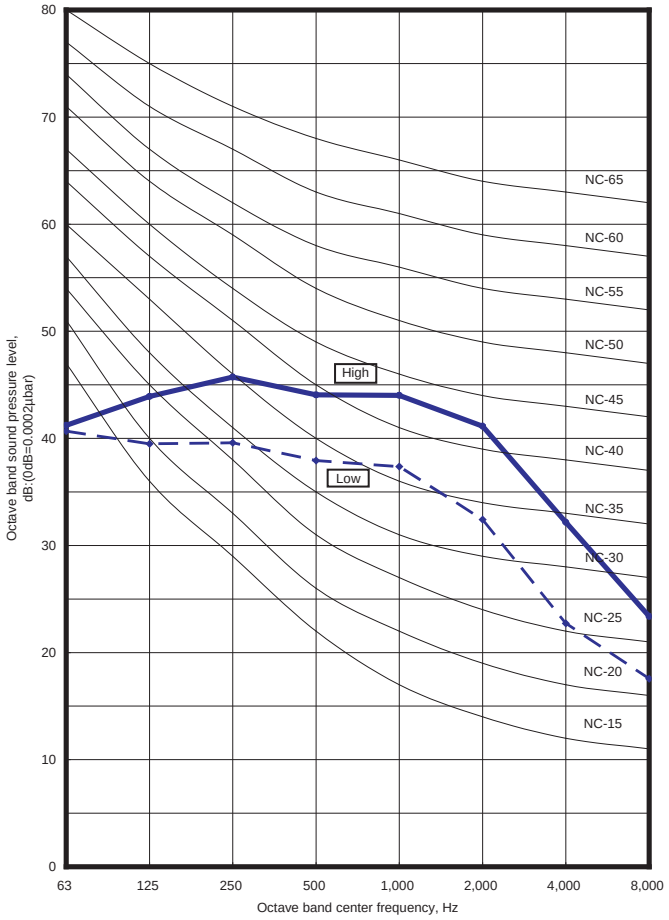

■ MODEL : AB∗A54

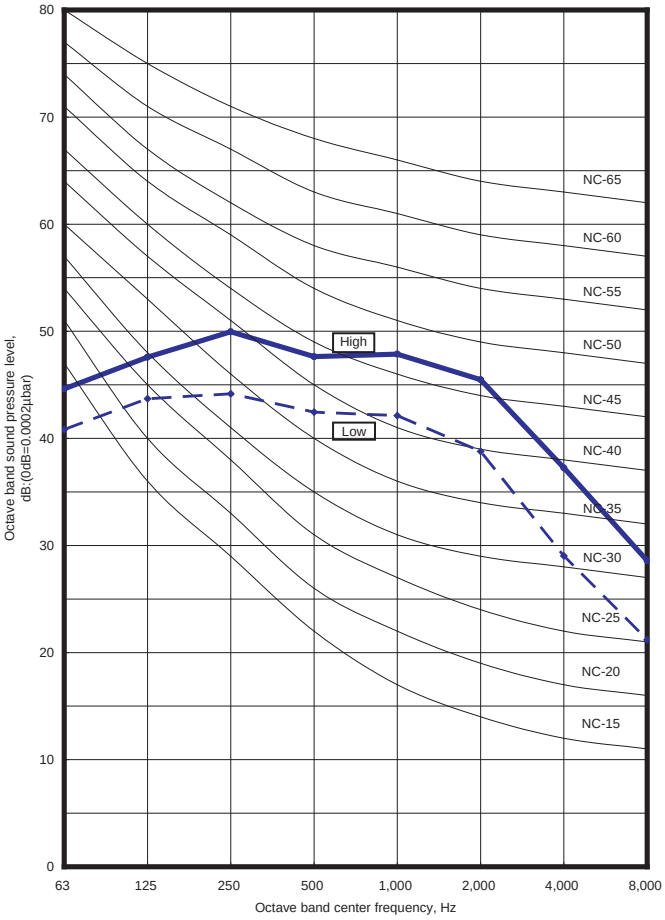

INDOOR UNIT

4-10-9. COMPACT WALL MOUNTED TYPE (Comfort model)

■ MODEL : AS∗E07

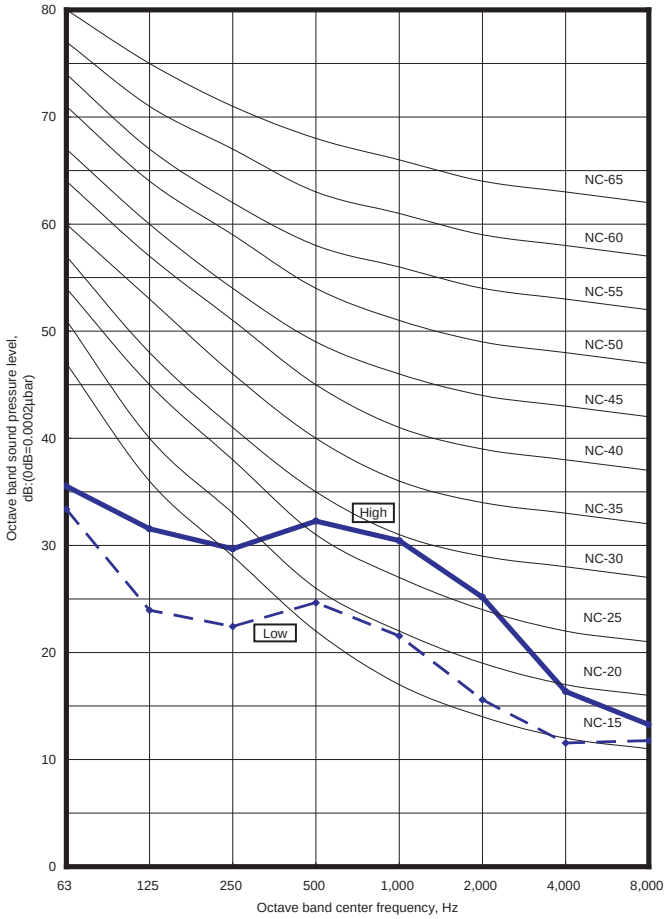

■ MODEL : AS∗E09

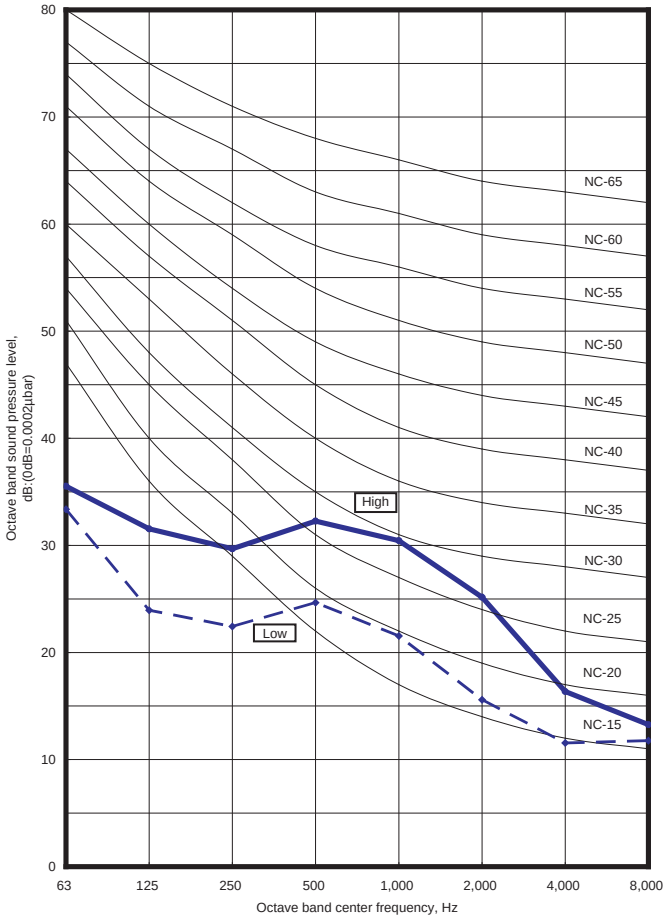

■ MODEL : AS∗E12

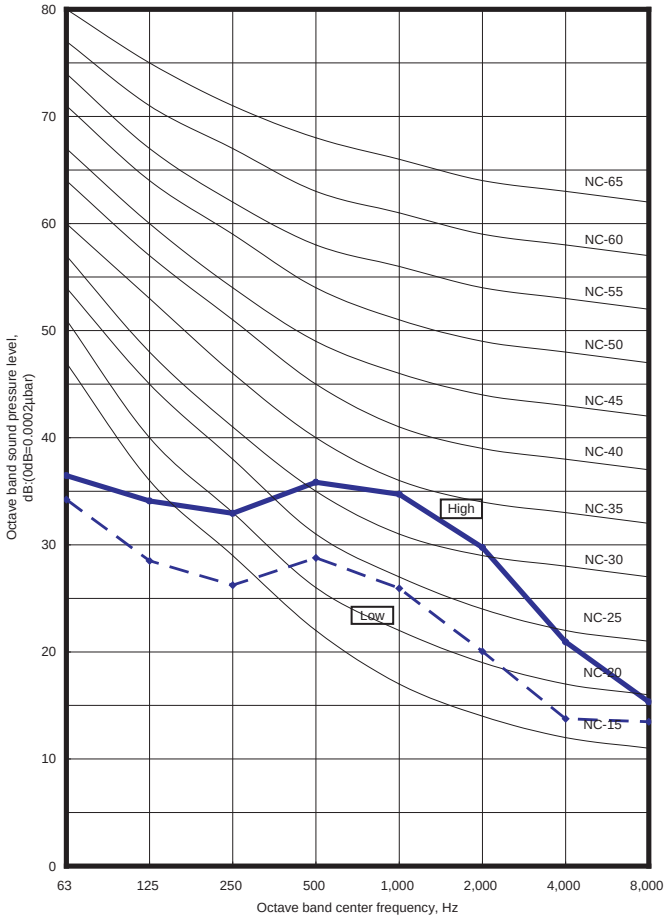

■ MODEL : AS∗E14

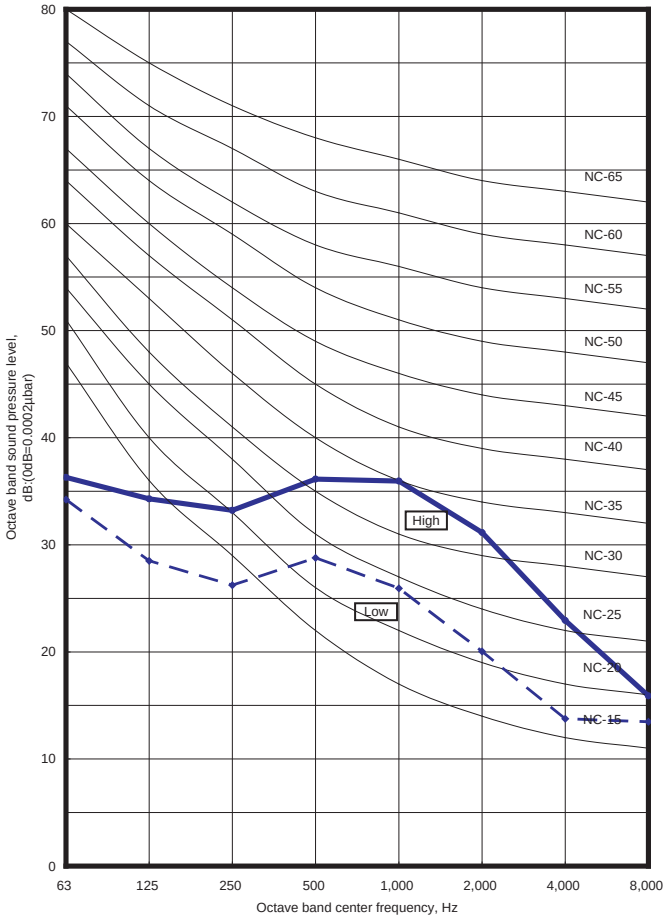

INDOOR UNIT

4-10-10. WALL MOUNTED TYPE

■ MODEL : AS∗A18

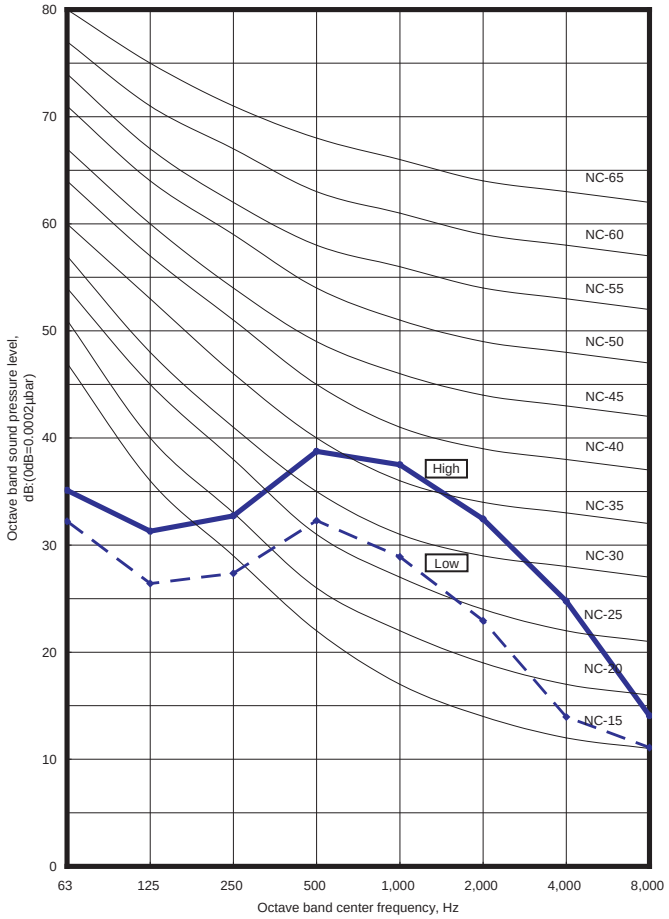

■ MODEL : AS∗A24

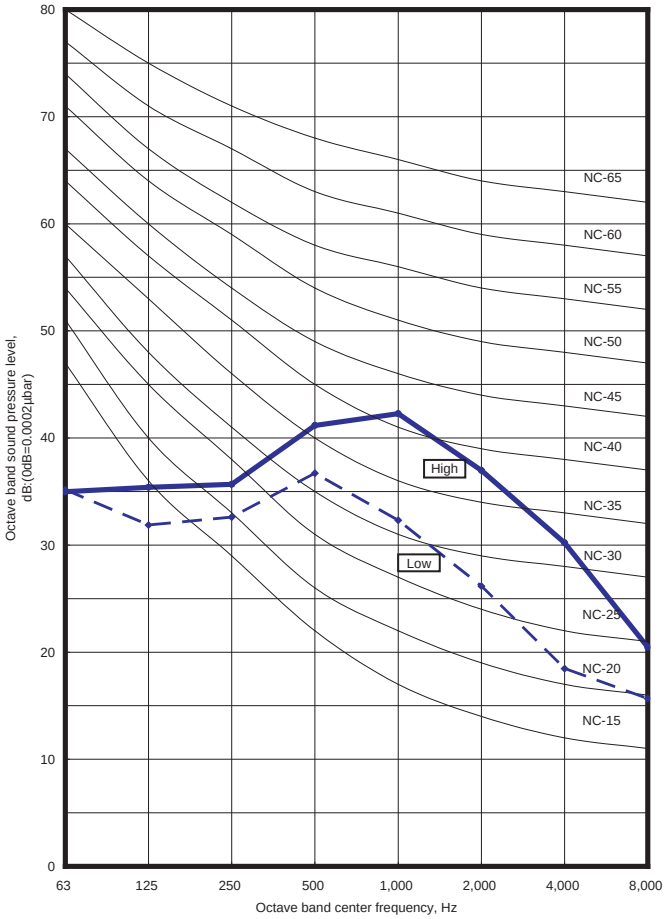

■ MODEL : AS∗A30

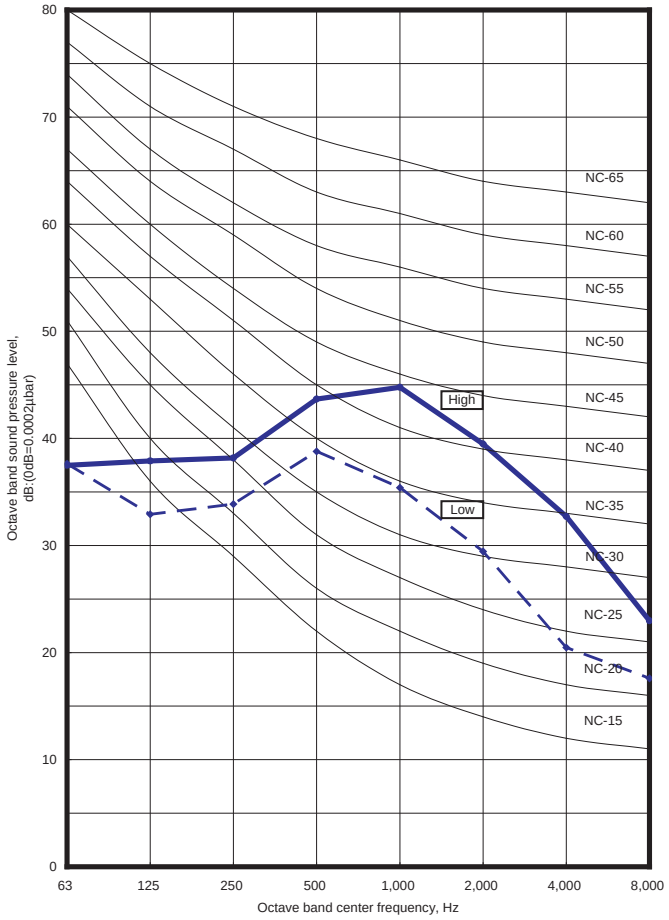

INDOOR UNIT

INDOOR UNIT

4-10-11. CEILING WALL TYPE

■ MODEL : AW∗A07

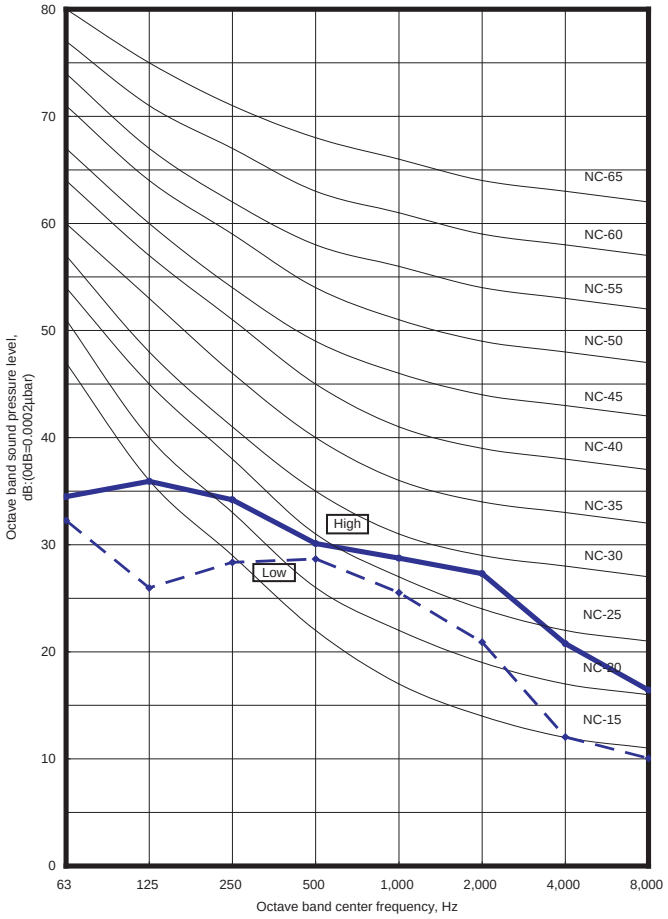

■ MODEL : AW∗A09

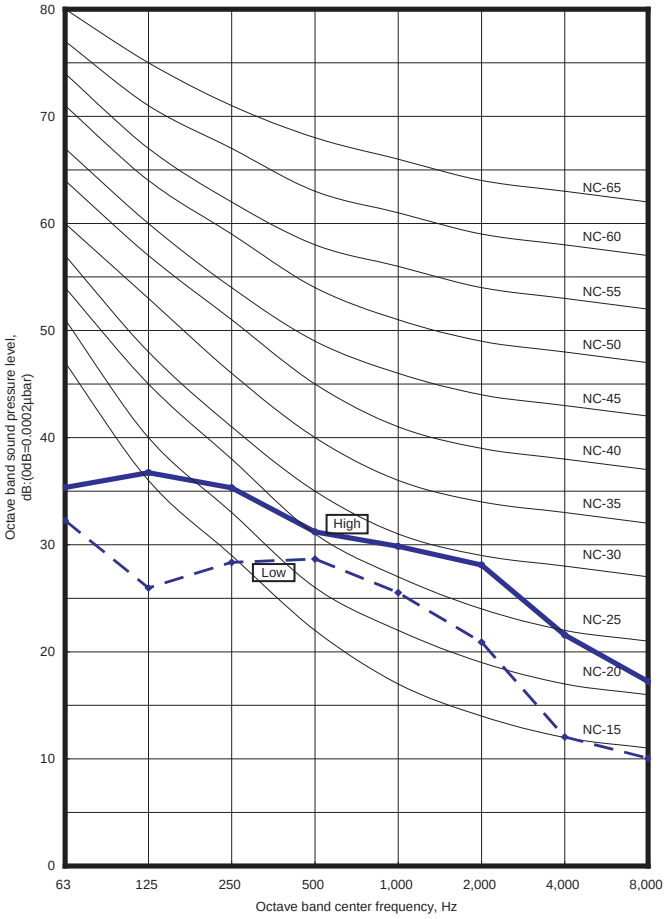

■ MODEL : AW∗A12

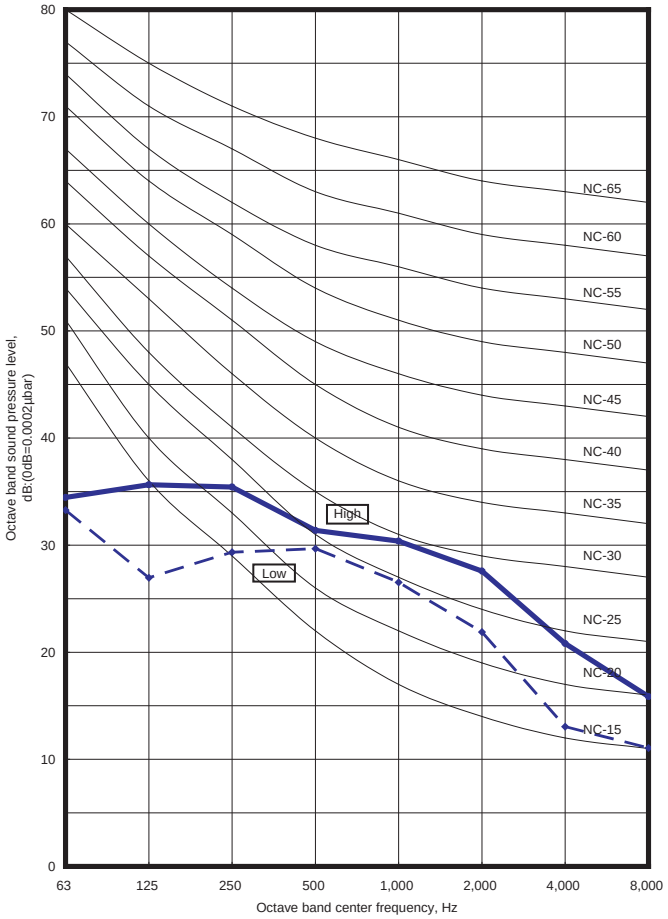

■ MODEL : AW∗A14

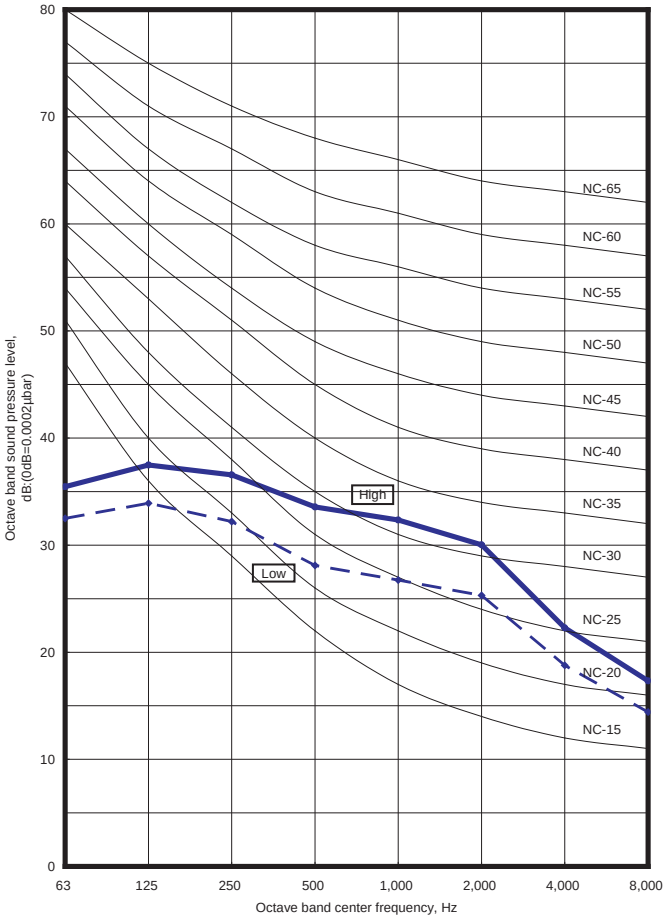

INDOOR UNIT

■ MODEL : AW∗A18

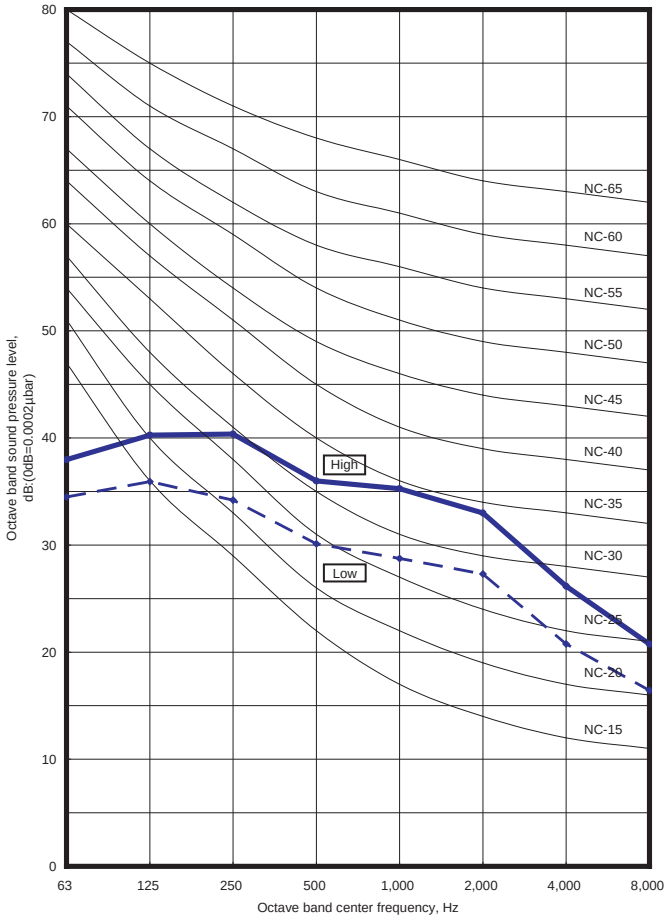

■ MODEL : AW∗A24

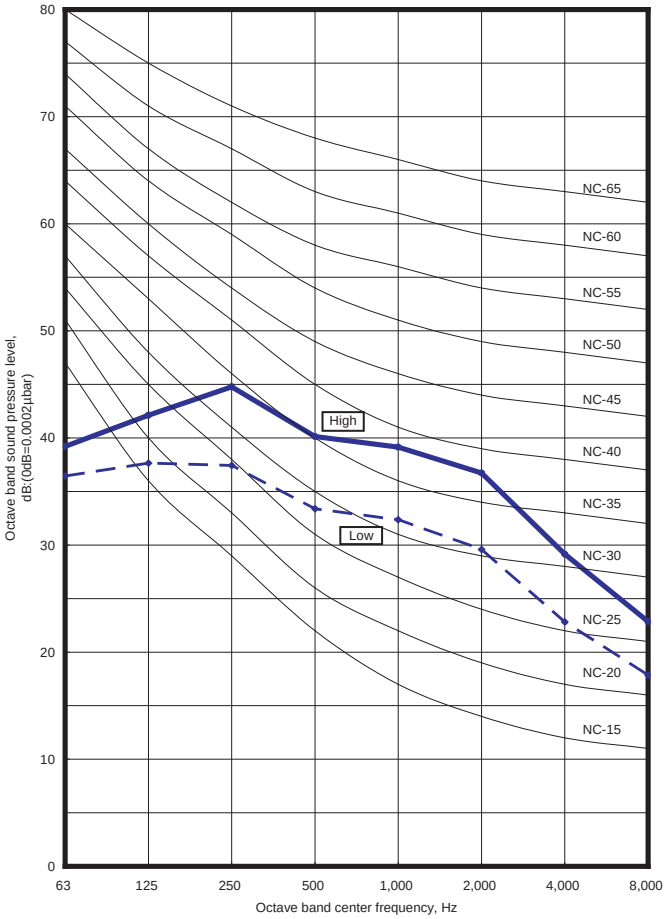

INDOOR UNIT

■ MODEL : AW∗A30

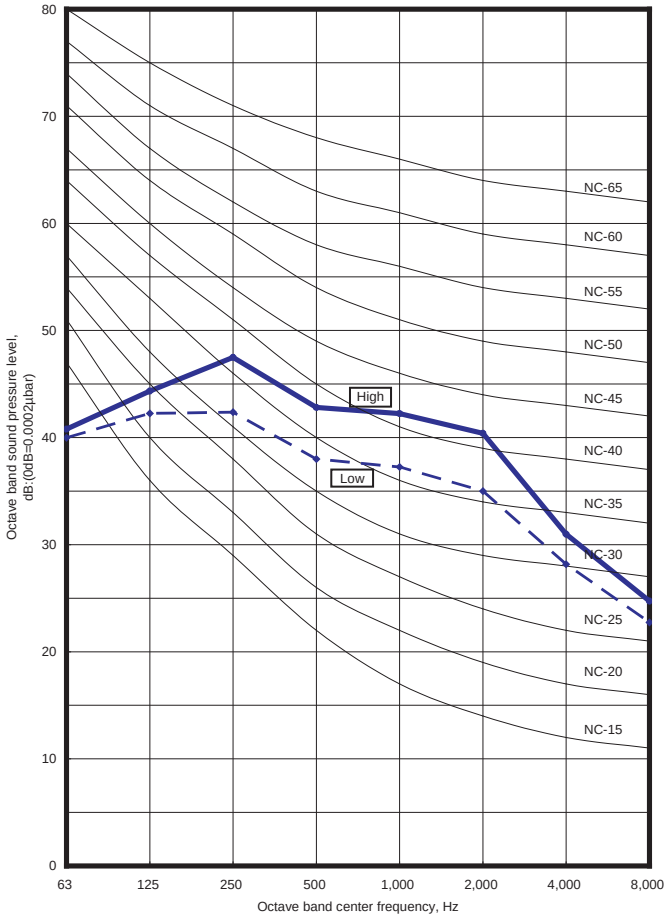

■ SOUND LEVEL CHECK POINT

- COMPACT CASSETTE TYPE
- CASSETTE TYPE

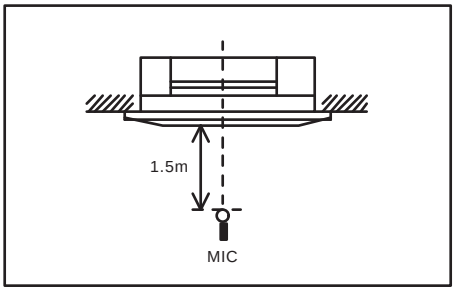

- COMPACT DUCT TYPE
- LOW STATIC PRESSURE DUCT TYPE
- DUCT TYPE
- HIGH STATIC PRESSURE DUCT TYPE

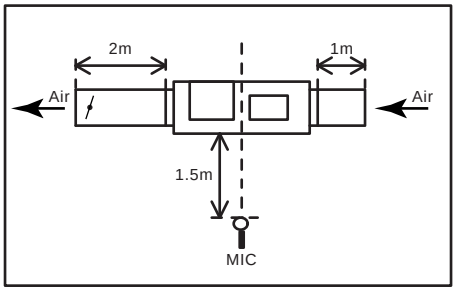

- FLOOR / CEILING TYPE
- CEILING TYPE

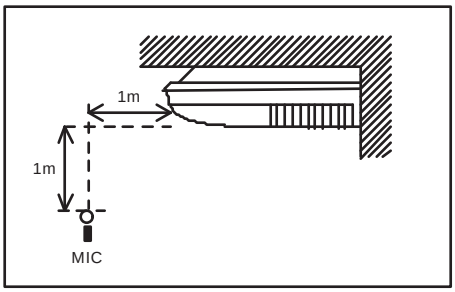

- FLOOR / CEILING TYPE

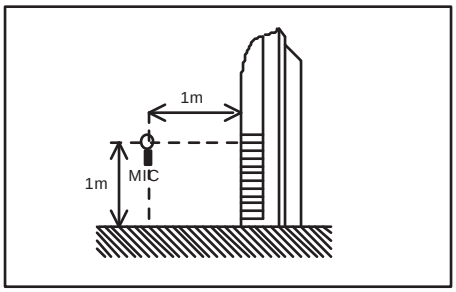

- COMPACT WALL MOUNTED TYPE (Comfort model)
- WALL MOUNTED TYPE
- CEILING WALL TYPE

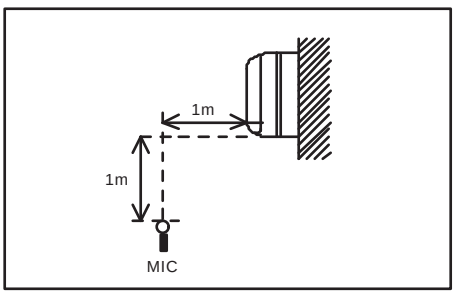

INDOOR UNIT

4-11. SAFETY DEVICES

Model and type		PCB fuse	Fan motor thermal protector	Terminal thermal fuse	Float switch
Compact Cassette	AUXB07LATF	250V 3.15A	-	102℃ OFF	○
	AUXB09LATF				
	AUXB12LATF		140 ± 5℃		
	AUXB14LATF				
	AUXB18LATF				
Cassette (Slim Type)	AU*A20LATF	250V 3.15A	150 ± 5℃	102℃ OFF	○
	AU*A25LATF				
	AU*A30LATF				
Cassette	AU*A36LATF		130 ± 5℃		
	AU*A45LATF				
	AU*A54LATF				
Compact Duct	ARXB07LALF	250V 3.15A	140 ± 5℃	-	-
	ARXB09LALF				
	ARXB12LALF				
	ARXB14LALF				
	ARXB18LALF				
Low Static Pressure Duct	ARXB25LATF	250V 3.15A	150 ± 5℃	-	-
	ARXB30LATF				
	ARXB36LATF				
	ARXB45LATF				
Duct	ARXA25LATF	250V 3.15A	150 ± 5℃	-	-
	ARXA30LATF				
	ARXA36LATF				
	ARXA45LATF				
High Static Pressure Duct	ARXC36LATF	250V 3.15A 250V 10A *1)	150 ± 5℃	-	-
	ARXC45LATF				
	ARXC60LATF				
	ARXC90LATF	250V 3.15A			
Floor / Ceiling	AB*A12LATF	250V 3.15A	150 ± 5℃	-	-
	AB*A14LATF				
	AB*A18LATF				
	AB*A24LATF				
Ceiling	AB*A30LATF	250V 3.15A	120 ± 5℃	-	△ *2)
	AB*A36LATF				
	AB*A45LATF				
	AB*A54LATF				
Compact Wall Mounted (Comfort Model)	AS*E07LACF	250V 3.15A	110 ± 10℃	102℃ OFF	-
	AS*E09LACF				
	AS*E12LACF				
	AS*E14LACF				
Wall Mounted	AS*A18LATF	250V 3.15A	150 ± 5℃	102℃ OFF	-
	AS*A24LATF				
	AS*A30LATF				
Ceiling Wall	AW*A07LATF	250V 3.15A	120 ± 5℃	102℃ OFF	-
	AW*A09LATF				
	AW*A12LATF				
	AW*A14LATF				
	AW*A18LATF				
	AW*A24LATF				
	AW*A30LATF				

*1) Fuse for fan motor.

*2) Including in the Drain Water Riser Kit (Optional parts).

INDOOR UNIT

Refrigerant R410A
INVERTER

AIRSTAGE™
V SERIES

5. CONTROL SYSTEM

5-1. CONTROL SYSTEM

5-1-1. LINE UP OF CONTROLLERS

Features of control system

Installation Work Saving

Simplified wiring and reduced installation cost by the use of non-polar 2-core transmission line.

Control System Configuration Expansion

Optimum system configuration by various controller combinations, allowing for various applications and future expansion.

Easy Operation

Advanced control functions can be set up with the easy-to-use setting operation.

Free System Configuration

Up to 400 indoor units are connectable in one system. System is adaptable to various applications, from small to large buildings.

CONTROL SYSTEM

Air Conditioning Central Control

PC Controller and Central Remote Controller specially designed for centralized control.

PC Controller

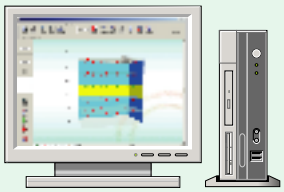

UTR-YOTB [Software]

✳High performance and optimum control system for various building applications

A high degree of building air conditioning management is possible including electricity charge calculation and numerous data management functions as well as standard equipment monitoring and control.

Central Remote Controller

UTB-YCA / UTB-GCA

✳Functionality in a compact housing with built-in weekly timer

It allows operation and monitoring to be achieved from the central control room, at each floor, by each tenant, or in the plant room.

Group Remote Controller

UTB-YDB / UTB-GDB

✳ Group control of indoor units with simple operation

Network convertor (UTR-YRDA) is required to connect group remote controllers to a VRF system.

Air Conditioning Individual Control

A range of Remote Controllers suitable for a wide range of individual control situations, using various built-in timers

Wired Remote Controller

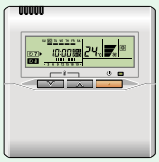

UTB-YUB / UTB-GUB / UTB-TUB

✳The room temperature can be controlled by being detected the temperature accurately with built-in thermo sensor.

Wireless Remote Controller

UTB-YVB / UTB-GVB

✳ Simple and sophisticated operations with a choice of 4 daily timers

Simple Remote Controller
(With MASTER CONTROL)

UTB-YPB / UTB-GPB / UTB-TPB

✳ Compact remote controller concentrates on the basic functions such as On/Off, Fan Control, Temperature Setting and Operation Mode.

Simple Remote Controller
(Without MASTER CONTROL)

UTB-YRA / UTB-GRA / UTB-TRA

✳ Compact remote controller concentrates on the basic functions such as On/Off, Fan Control and Temperature Setting.

CONTROL SYSTEM

Web Monitoring Tool

Trouble-shooting is performed by monitoring each air conditioning unit remotely during periodical system checks.

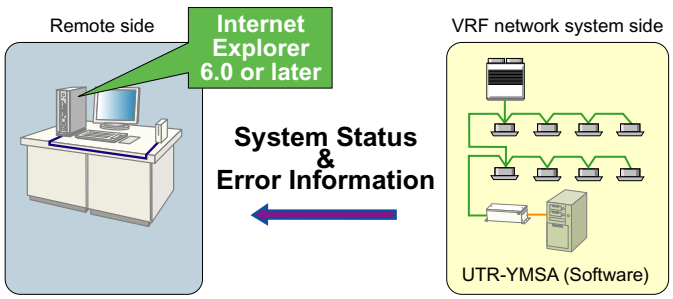

Error notification can be automatically transmitted to several locations using the internet*.
Requires either a dedicated internet connection* or public telephone line.

*Unchanging global IP address is required.

Building Management System (BMS)

The VRF network system can be controlled by Building Management System through Network convertor for LONWORKS® or BACnet® Gateway.

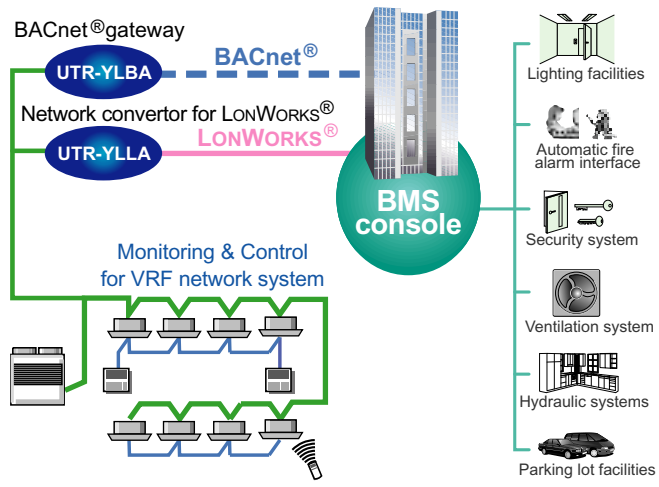

5-1-2. CONTROL SYSTEM DESIGN

Advanced Integrated Control System with BMS

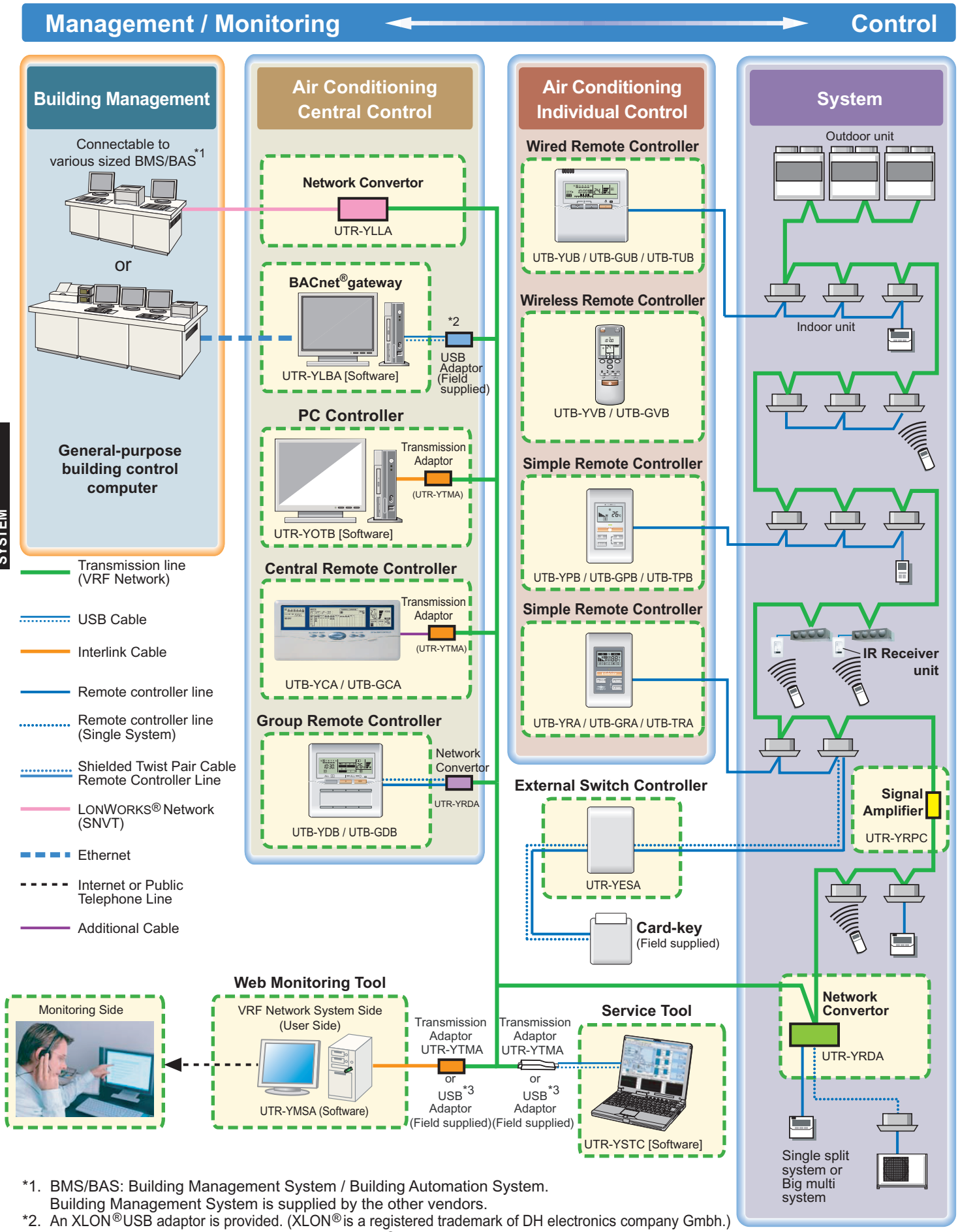

*1. BMS/BAS: Building Management System / Building Automation System.
Building Management System is supplied by the other vendors.
*2. An XLON®USB adaptor is provided. (XLON® is a registered trademark of DH electronics company Gmbh.)
*3. U10 USB Network Interface - TP/FT-10 (Echelon® corporation)

5-1-3. SYSTEM CONFIGURATION EXAMPLES

■ INDIVIDUAL CONTROL

Wired Remote Controller

* Up to 16 indoor units can be controlled with one wired remote controller.
* Wired, simple, and wireless remote controllers can be used jointly.
* Two remote controllers can be connected with a single indoor unit.

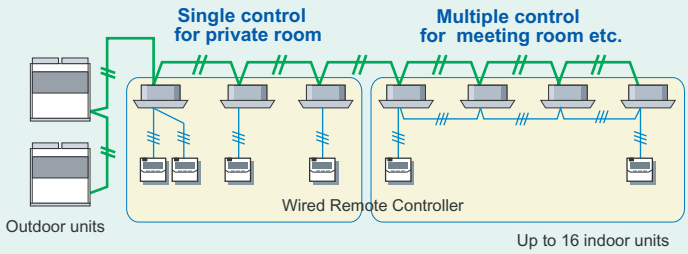

Wireless Remote Controller

* Up to 16 indoor units can be controlled with one wireless remote controller.
* Wired, simple, and wireless remote controllers can be used jointly.

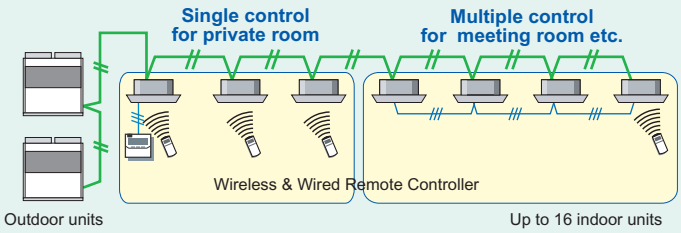

CONTROL SYSTEM

Simple Remote Controller

* Up to 16 indoor units can be controlled with one simple remote controller.
* Enables easy control of basic functions by the hotel or office guest.
* Two remote controller can be connected with a single indoor unit.

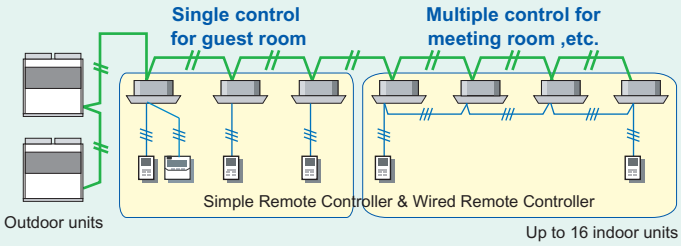

CONTROL SYSTEM

External Switch Controller

* Up to 16 indoor units can be controlled with one external switch controller.
* In combination with a field supplied card-key switch or other sensor, External switch controller allows control of basic functions by the hotel or office guest.

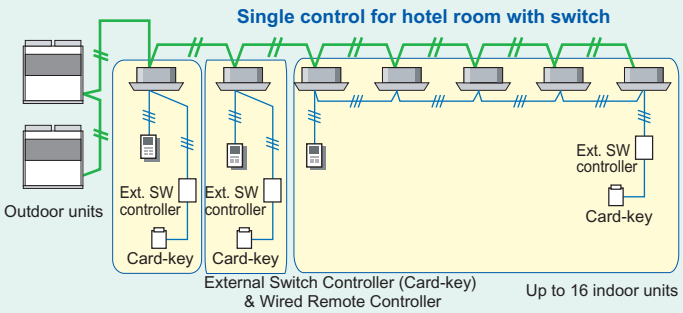

Single Split or Big Mult System Connectability

* Single spilit system or Big multi system can be connected to the VRF network system and can be controlled from central remote controller or PC controller.

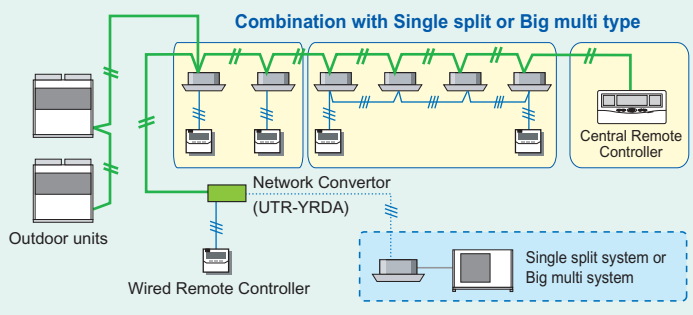

■ CENTRAL CONTROL

Group Remote Controller

✱ Up to 8 remote controller groups (96 indoor units) can be controlled with one group remote controller.
✱ Up to a total of 16 network convertors and central remote controllers can be connected to a single VRF network system.
✱ Up to 4 groups remote controllers can be connected to a single network convertor (UTR-YRDA).
✱ 2 refrigerant systems with one network convertor (UTR-YRDA) is allowed.

Office & Hotel building (Small class)

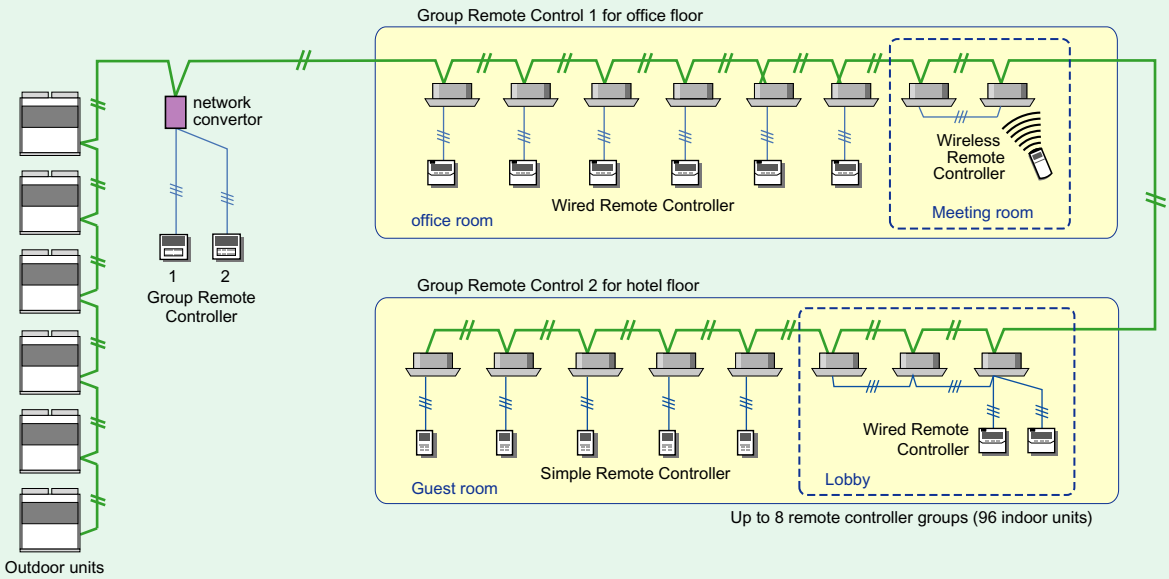

Central Remote Controller

✱ Up to 400 indoor units / 64 groups can be controlled with one central remote controller.
✱ Up to a total of 16 network convertors and central remote controllers can be connected to a single VRF network system.
✱ Simple system configuration available using built-in weekly / daily timer.

Commercial building (Small class)

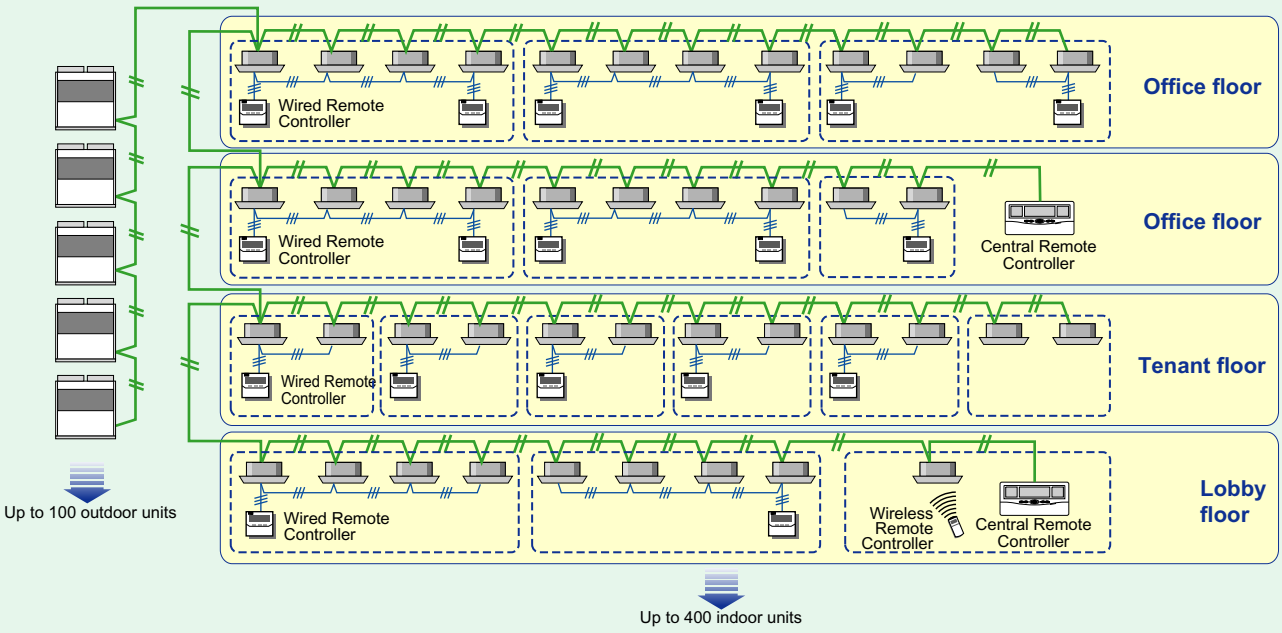

CONTROL SYSTEM

CONTROL SYSTEM

PC Controller

* UP to 400 indoor units / 400 groups can be controlled with one PC controller.
* Incorporates a function that automatically calculates electrical charge.

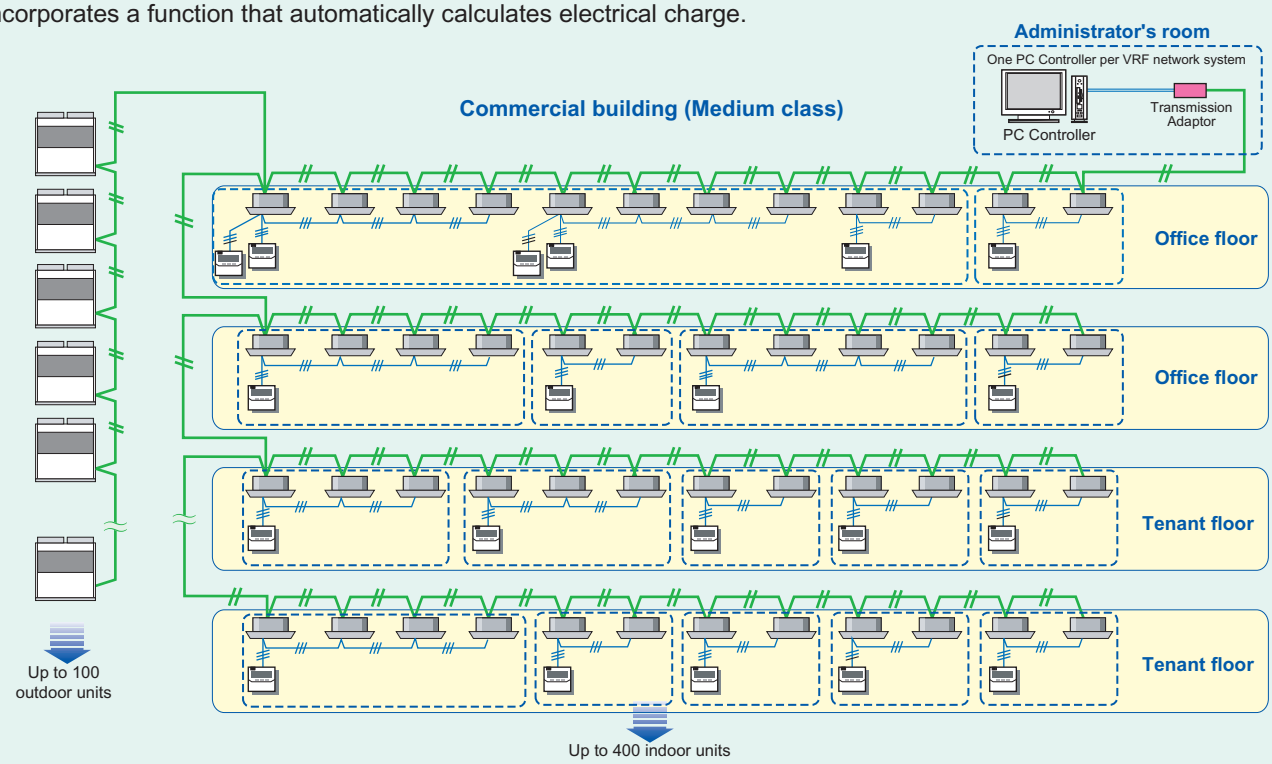

Combination of Central Remote Controller and PC Controller

* The central remote controller and PC controller can be used simultaneously.

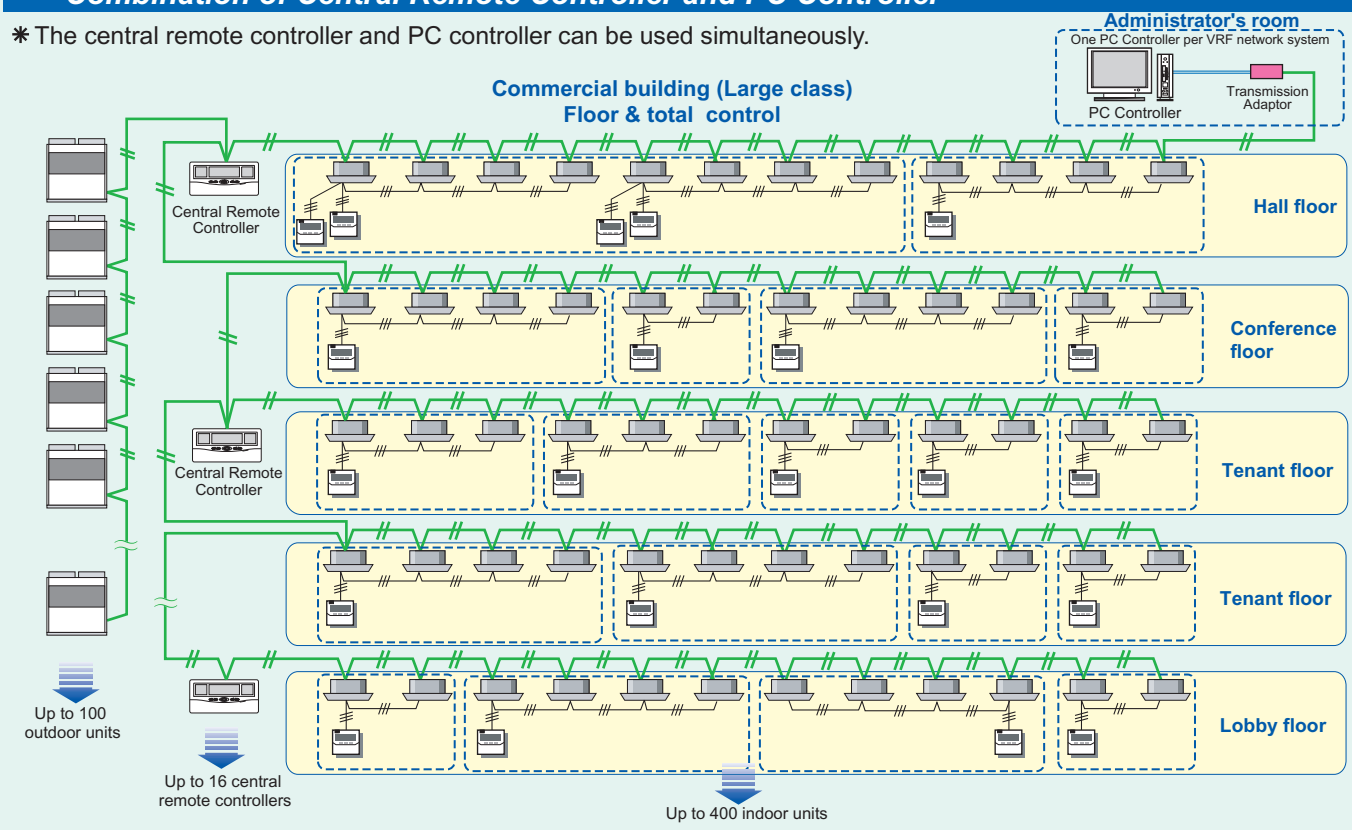

■ INDOOR UNIT TYPE AND THE APPLICABLE INDIVIDUAL CONTROL METHOD

Individual Remote Controller / Indoor Unit Type	Wired Remote Controller	Simple Remote Controller	Wireless Remote Controller	External Switch Controller
	UTB - ✱UB	UTB - ✱PB UTB - ✱RA	UTB - ✱VB	UTR - YESA
Compact Cassette	○	○	○	○
Cassette	○	○	○	○
Compact Duct	○	○	△ ✱1)	○
Low Static Pressure Duct	○	○	△ ✱1)	○
Duct	○	○	△ ✱1)	○
High Static Pressure Duct	○	○	△ ✱1)	○
Floor / Ceiling	○	○	○	○
Ceiling	○	○	○	○
Compact Wall Mounted (Comfort Model)	○	○	○	○
Wall Mounted	○	○	○	○
Ceiling Wall	○	○	○	○

✱ 1) IR Receiver Unit (Optional parts) is necessary.

CONTROL SYSTEM

■ CONVERTORS (ADAPTORS) AND THE RELATED EQUIPMENTS (SYSTEMS)

		Within VRF Network System					VRF Network System ◄► Other System	
		PC Controller	Central Remote Controller	Group Remote Controller	Web Monitoring Tool	Service Tool	BMS / BAS	Single Split System Big Multi System
		UTR - YOTB (Software)	UTB - ✱CA	UTB - ✱DB	UTR - YMSA (Software)	UTR - YSTC (Software)	-	-
BACnet® Gateway	UTR - YLBA (Software)	-	-	-	-	-	○ ✱2)	-
Network Convertor for LonWorks®	UTR - YLLA	-	-	-	-	-	○	-
Network Convertor	UTR - YRDA	-	-	○	-	-	-	○
Transmission Adaptor	UTR - YTMA	○ (Accerssory)	○ (Accerssory)	-	○ ✱3)	○ ✱3)	-	-

✱ 2) An XLON® USB adaptor (product of DH Electronics, field supplied) is necessary.

✱ 3) Instead of Transmission Adaptor (UTR - YTMA), an U10 USB Network Interface TP/FT-10 (product of Echelon®corporation, field supplied) can also be used.

5-1-4. FEATURES OF CONTROL SYSTEM

- Wiring work can be reduced since all equipment making up the system is wired with only one transmission line (non-polar 2-conductor).
- Since each equipment on the transmission line is independently processed, a system failure at one indoor unit does not affect other equipment.
- Total wiring length (total length of transmission line) can be extended up to 2000m (with signal amplifier unit).
- Maximum 400 indoor units can be connected.
- Maintenance work efficiency is improved, because Service tool can be connected to anywhere on the transmission line.
- Indoor units can be controlled by Wired, Simple, Wireless, Group, Central remote controller and PC controller.
- When a failure occurs, the error code is displayed and details can be confirmed at the Wired remote controller,Simple remote controller, Group remote controller, Central remote controller, or PC controller.
- By adopting an interface for FUJITSU GENERAL's single split type models (excluding some models) or multi air conditioner for building models, the central control will be available from the Group remote controller or Central remote controller or PC controller.
- Simple remote controller that allows an easy operation is available for the installation such as a hotel guest room.
- These components can be freely combined to get the maximum control depending on the usage of the building

CONTROL SYSTEM

NOTE

- By selecting DIP SW , refrigerant system allows to use for either "Heat Pump" or "Cooling Only" operation.

  For using "Cooling Only", set the DIP-SW on outdoor unit PCB and individual remote controller (Wired, Simple) for blocking the heating function.
  External input function is also usable for blocking the heating function.

- In case of "Heat Pump" type, the refrigerant system operates "Cooling" or "Heating" operation.

  Operation mode of each indoor unit within system will be same operation mode either "Cooling" or "Heating".
  (The first command of operation mode has prioritized.)

Note:

Indoor unit might not be well responsed with controller signal for switching operation mode "Cool"◄►"Heat" during system operating(other one or some indoor units operating).

In this case, Please once stop the operation for all connected units in refrigerant system. After a little while (Approx 10 min.) set again the operation mode.

5-1-5. WIRING SYSTEM

- Wiring construction of the control system is made of power source wiring, transmission wiring and remote controller wiring.
- Total wiring length (total length of transmission line) can be extended up to 2000m (by using signal amplifiers).

Connectable outdoor units 100 max.
Connectable indoor units 400 max.
Transmission line length 2000m max.

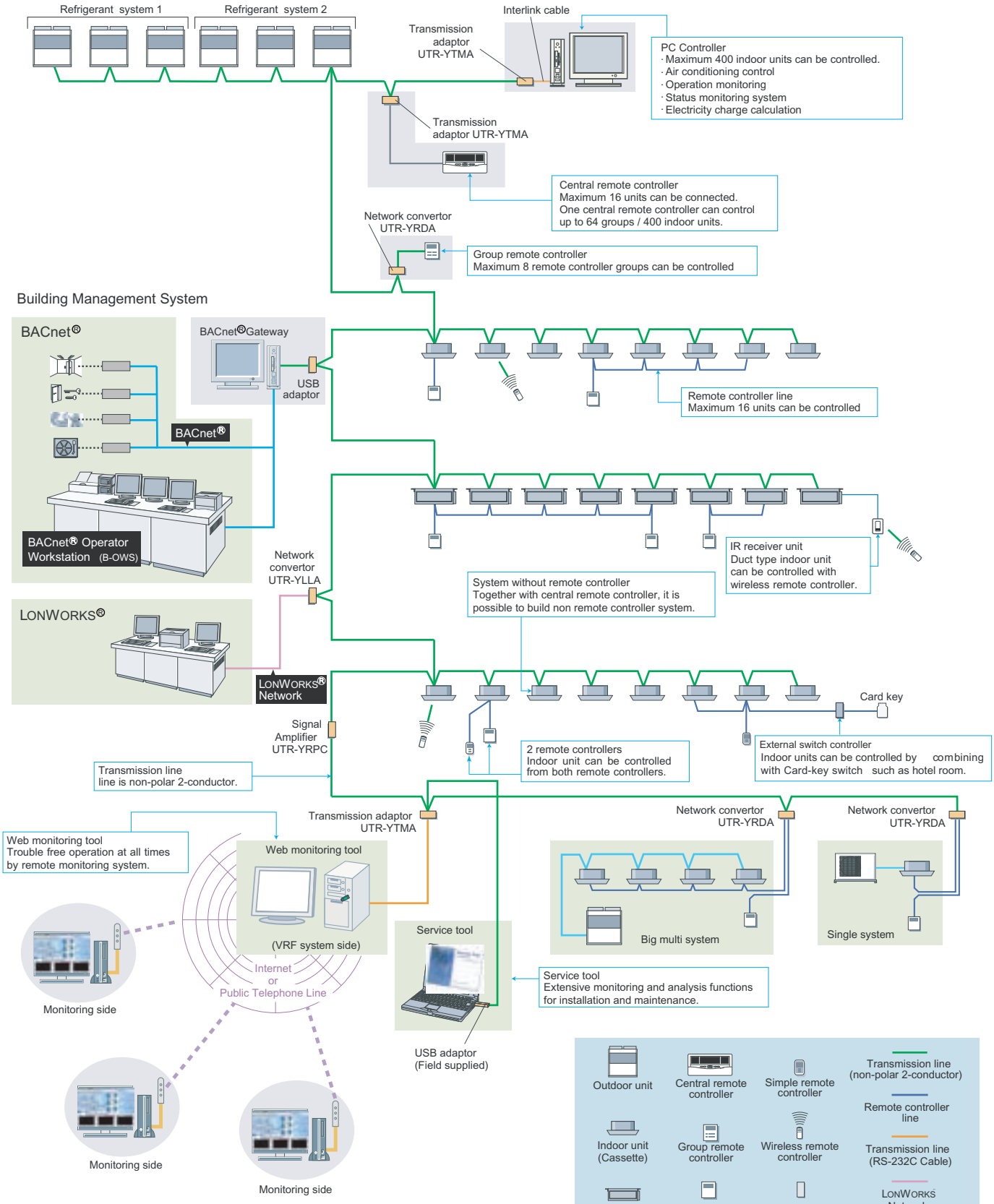

Combination of individual remote controller

Wired, wireless and simple remote controllers can be used jointly.

CONTROL SYSTEM

CONTROL SYSTEM

5-2. CONTROL UNITS

The following types of controllers are available with the FUJITSU GENERAL LIMITED VRF System :

- **PC Controller**
- **Central Remote Controller**
- **Group Remote Controller**
- **Wired Remote Controller**
- **Simple Remote Controller**
  (With MASTER control)
  (Without MASTER control)
- **Wireless Remote Controller**
- **IR Receiver Unit**

Central Control

PC Controller	Central Remote Controller	Group Remote Controller
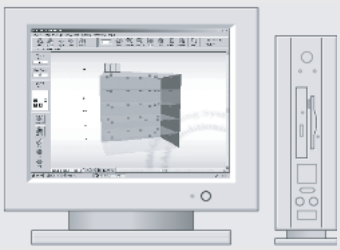		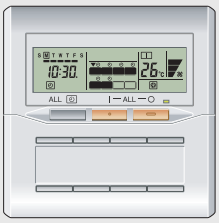

Individual Control

Wired Remote Controller	Simple Remote Controller (With MASTER control)	Simple Remote Controller (Without MASTER control)	Wireless Remote Controller	IR Receiver Unit
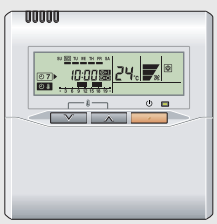				

CONTROL SYSTEM

5-2-1. PC CONTROLLER Software

MODEL : UTR-YOTB

■ FEATURES

- Up to 400 indoor units / 400 remote controller groups / 400 groups can be connected into one system for large scale buildings or hotels.
- Provides powerful functions for building air conditioning management, including electricity charge calculation and numerous data management functions, as well as standard equipment monitoring and control.

(1) Central building monitoring and control

- Detailed settings can be programmed for each whole building/group/remote controller group or individual indoor units.
- The PC and central remote controller can be used together to permit system control from two or more locations, if required.

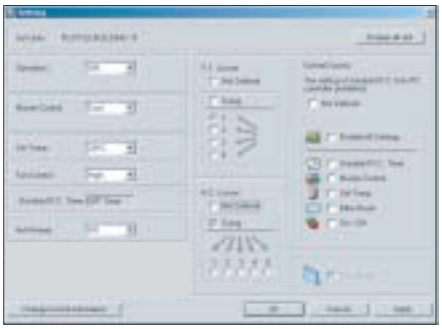

Operation Control

(2) Central control

Any of 6 functions of the individual remote controller can be locked to permit access from the PC controller: all functions, timer mode, operating mode, temperature setting, filter reset, on/off. Or the system can be set to allow control from the PC Controller only.

(3) Auto mode (Priority-mode changer)

Auto mode function automatically switches between cooling and heating modes based on the temperatures set and the room temperature detected by the master indoor unit.
Other operating indoor units can be operated in the same operating mode as master unit.

(4) User-friendly operation

- Runs under Windows® 2000 and Windows® XP Professional / Home so is as easy to use as a standard PC.
- Operational status can be color-coded for instant recognition: On/green, Off/red, test/orange, error/flashing.
- Operational status can be displayed according to user's preference.

Rotating 3-D Display

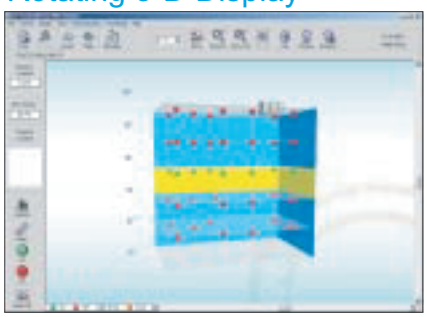

When monitoring and controlling the operations by whole building.

Floor Layout Display

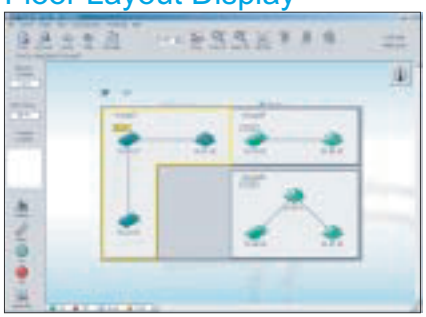

When monitoring and controlling the operations by each floor or group.

List Table Display

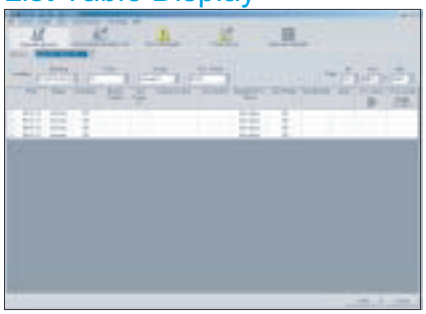

When monitoring and controlling each unit in detail.

(5) Electricity charge calculation

- Total electrical charges, billed for multiple indoor connected to the charge meter for air conditioning, is apportioned according to the accumulated operating time and indoor unit capacity.
- Allows accounting for special rates (e.g., for night or weekend use).
- Calculations can be printed as final bills.

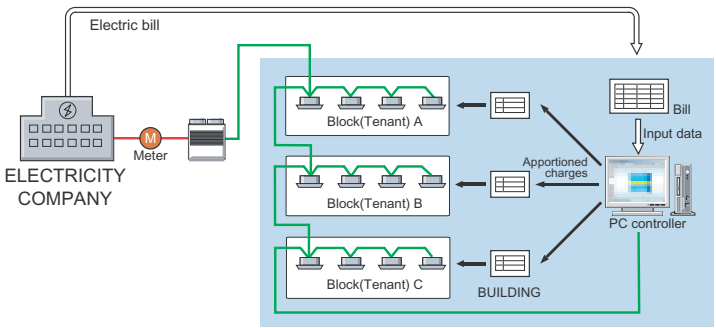

Note: This electrical power apportioning calculation is not official.
When issued to the user as a bill, it must be explained to the user in advance.

CONTROL SYSTEM

(6) Schedule control

- Annual schedules can be set for each remote controller group.
- Start/stop, operating mode, remote controller prohibition, and temperature settings can be recorded up to 72 times per day at 10 minute intervals for up to 6 configurations for each remote controller group.
- Settings can be made for periods straddling midnight.
- Allows programming of special settings for holidays, including public holidays, for a complete year.
- Standard 6 functions are available by schedule control.

Schedule Control

(7) Error display

Audible alarms are accompanied by explanatory text. Up to 100 alarms can be recorded for each piece of equipment, this is particularly useful during maintenance.

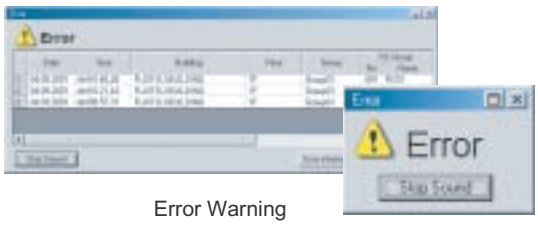

Error Warning

(8) Operating record

The operating status of indoor units and accumulated operating time of outdoor units can be logged and a daily or monthly report produced.

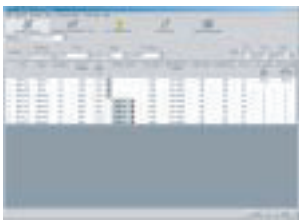

Operation Record

CONTROL SYSTEM

(9) Pattern setting

Recognizes patterns of use, including ON/OFF, operating mode, and set temperature.
An arbitrarily pattern operation can be done with just one button clicking.

■ SPECIFICATIONS

● Transmission adaptor

Power supply	50-60Hz 220-240V
Power consumption	2.9W
Fuse capacity	3A
Size (H x W x D) (mm)	100 x 288 x 107
Weight (g)	1300

■ SYSTEM DIAGRAM

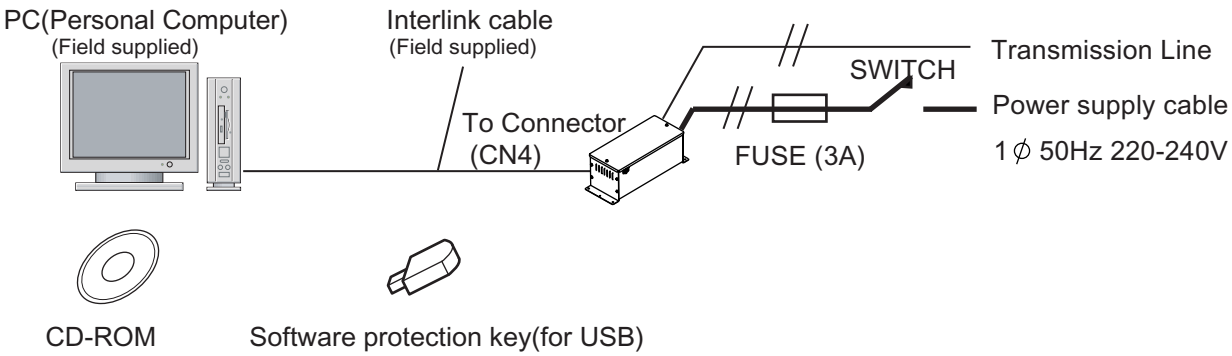

■ PACKING LIST

Name and shape	Q'ty	Application
Transmission adaptor 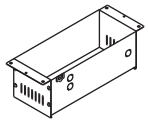	1	The equipment for transmitting data between PC controller and Indoor/Outdoor units.
Wood screw (ϕ4 x 20) 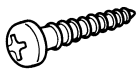	4	For mounting the transmission adaptor.
Binder (push mount) 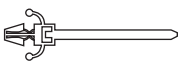	4	For mounting the power supply cord and transmission cord.
Software protection key 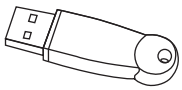	1	This is to prevent unauthorized use of the software.
Bushing (small)	3	For ϕ16 knockout holes. Use for the knockout holes.
Cover 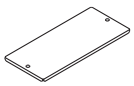	1	Transmission adaptor cover.
Tapping screw (ϕ4 x 6)	2	For mounting the transmission adaptor cover.
CD 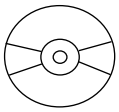	1	Includes the software for the PC controller.

※ Personal computer and Interlink cable must be procured at the site.

CONTROL SYSTEM

■ DIMENSIONS

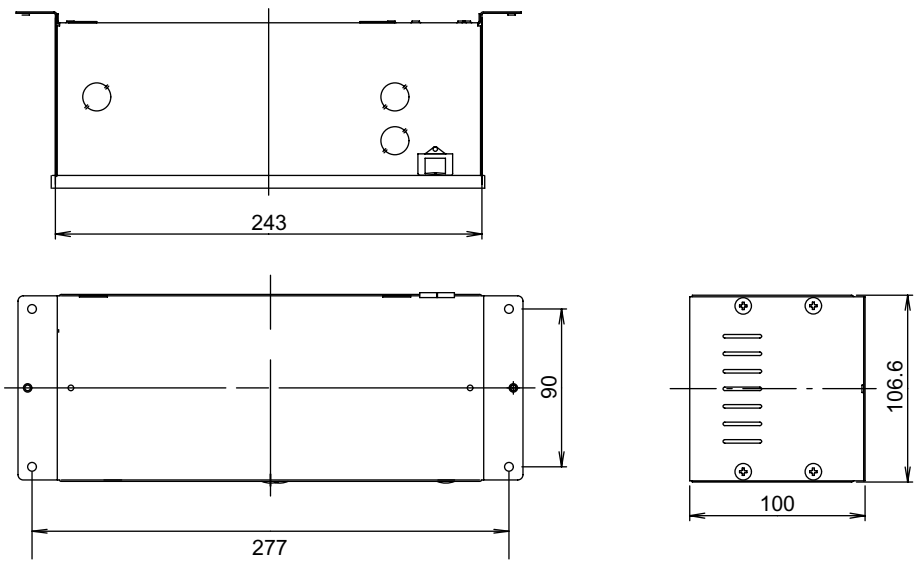

■ WIRING SPECIFICATIONS

Use	Size		Wire type	Remarks
Power supply cable (mm²)	Maximum	1.25	H07RN-F or equivalent	Single phase 50Hz 220-240V * 2 wire+Ground
	Minimum	0.5		
Transmission cable (mm²)	0.33		Shielded Level 4 (22AWG)	Non-polar,Twisted pair, Solid core
Fuse capacity (A)	3		——	——
Interlink cable	——		RS 232C Interlink cable D-sub 9 pin	See page (05-14) for details.

※ Always ground the unit.

● Personal computer specifications

The following equipment is required for using PC controller AT compatible machine that runs on Microsoft® Windows®

	PC (Personal Computer) CONTROLLER [UTR - YOTB]
CPU	Intel® Pentium® / Celeron®, AMD Athlon™ /Duron™ 1GHz or higher
Hard Drive	4GB or more of free space is required
Memory	256MB or more
Display	1024 X 768 dots or more, High color (16bit) or more Requires that the internal graphics accelerator be compatible with Microsoft DirectX 7.0 or later
Interface	Requires Serial port and USB port
Operating System	Microsoft® Windows® 2000 Professional (English language version) Service Pack 3 or later Microsoft® Windows® XP Professional / Home (English language version) Service Pack 1 or later (Microsoft® Windows® Vista® cannot be used for this product)
Required Software	Adobe® Acrobat® reader 4.0 or later
Accelerator	Requires that the internal graphics accelerator be compatible with Microsoft® DirectX® 7.0 or later

CONTROL SYSTEM

● Interlink cable

(Serial D-sub 9 pin)

Name and shapes	Quantity	Parts No.
InterLink cable	1	KRS-L09-4K

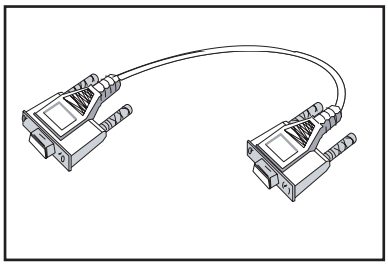

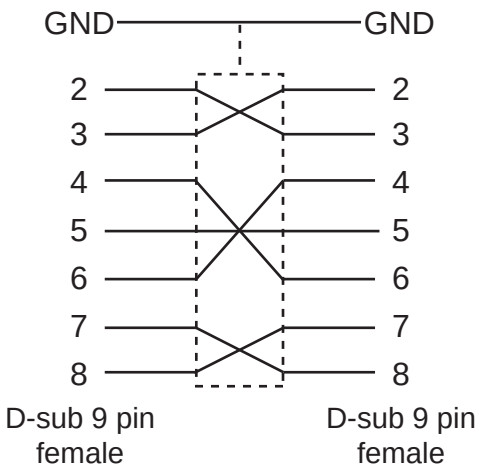

5-2-2.CENTRAL REMOTE CONTROLLER

Model : UTB - ✱ CA (Market region Y or G)

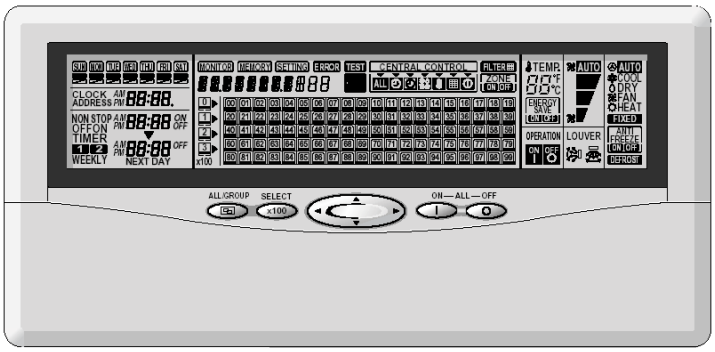

■FEATURES

- ✳ One remote controller can control up to 400 indoor units / 64 groups.
- ✳ Up to 16 central remote controllers can be connected in one VRF network system.
- ✳ Central remote controller can control the system by all / group / individual.
- ✳ The selectable functions (all functions, timer mode, operating mode, temperature setting, filter reset, and On / Off) of the standard controller can be locked by central remote controller.
- ✳ Weekly timer is equipped as standard function. (2 times On / Off per day for one week).
- ✳ Setting contents of central remote controller are all memorized, so that each indoor unit can be operated under the memorized conditions even if the operating conditions are changed later on.
- ✳ Error code is displayed when an error occurs.
  The history of failures can also be displayed, which is convenient for maintenance.

Examples of errors:

1. Microcomputer communication error
2. Heat exchanger thermistor error
3. Outdoor unit thermistor error
4. Discharge temperature error
5. Compressor error
6. Model information error
7. Indoor unit fan error
8. Room temperature thermistor error
9. Power supply frequency abnormal
10. Reverse phase blocker error
11. Pressure error
12. Pressure sensor error

■FUNCTIONS

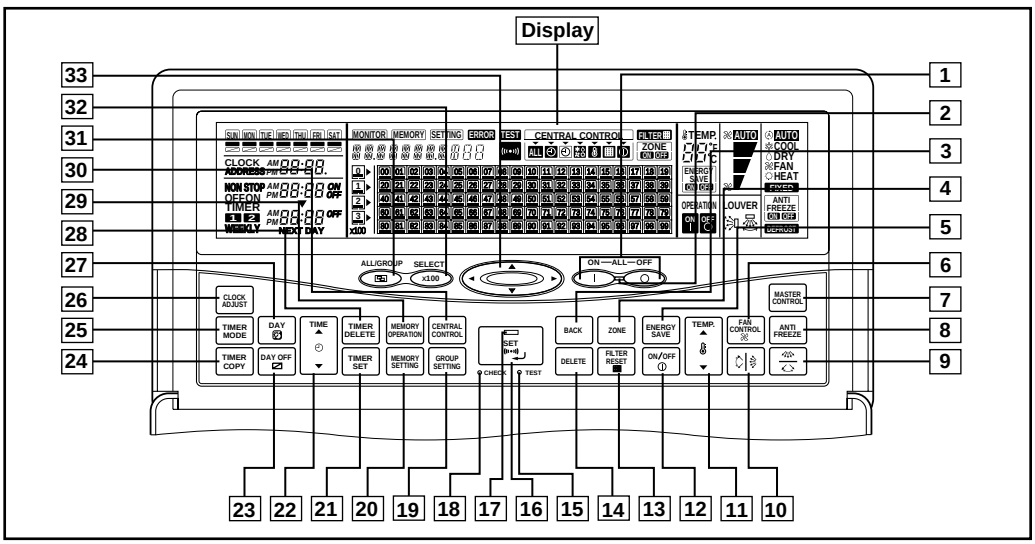

1	All ON/OFF button	
2	All ON/OFF LED	
3	Back button	
4	Zone button	
5	Energy save button	Starts energy save operation.
6	Fan control button	
7	Master control button ※1 ※2	
8	Anti freeze button	
9	Horizontal Air flow direction and swing button	
10	Vertical air flow direction and swing button	
11	Temp button	Indoor temperature setting.
12	ON/OFF button	ON/OFF setting.
13	Filter reset button	
14	Delete button	Deletion of setting.
15	Test button	

16	Set button	Transmits of all changed setting details.
17	Set LED	Blinks when transmission is necessary.
18	Check button	Confirmation of address display and error code.
19	Group setting button	Setting of group of a remote controller group connected to the central remote controller.
20	Memory setting button	Memorizes the entire setting contents.
21	Timer set button	Sets date, hour, minute and on-off time.
22	Time button	On-off time setting.
23	Day off button	Temporary cancellation of one day timer.
24	Timer copy button	Copies the timer condition (the day before).
25	Timer mode button	Changes the timer mode (NON STOP, OFF, ON1, ON2, WEEKLY).
26	Clock adjust button	
27	Day button	
28	Timer delete button	
29	Memory operation button	Operates the memorized condition.
30	Central button	Inhibits some operations of the individual remote controller.
31	All/Group button	Changes the control unit (ALL→GROUP→R.C.GROUP).
32	Select ×100 button	Remote controller group indication by hundreds.
33	Select button	Changes remote controller group or group number.

Display panel

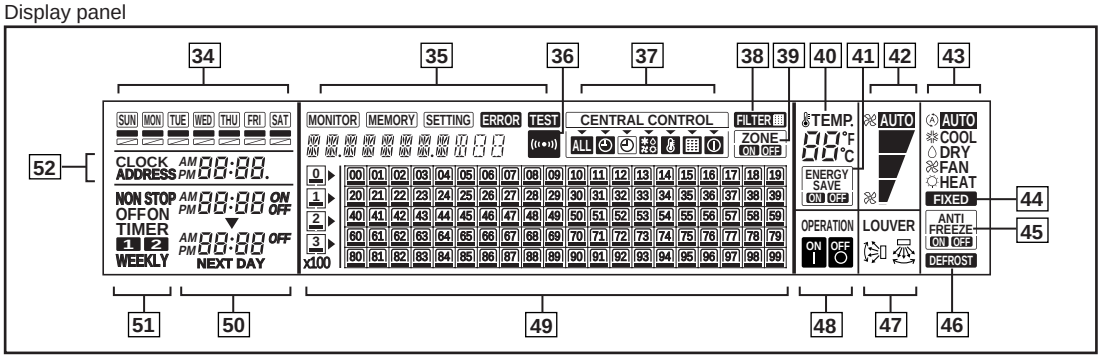

34	Day of week display	40	Temperature display	45	Anti freeze display	51	Timer mode display
35	Status display	41	Energy save display	46	Defrost display	52	Clock and address display
36	Transmit indicator display	42	Fan control display	47	Air flow direction display		
37	Central control display	43	Master control display	48	ON/OFF display		
38	Filter reset display	44	Fixed cooling or heating operation display	49	Group control display		
39	Zone display			50	ON/OFF time display		

NOTE

※ 1 : "AUTO Ⓐ" and "FAN ※" cannot be selected for "HEAT PUMP TYPE"

※ 2 : "HEAT ☼" cannot be selected for "COOLING ONLY TYPE"

■ SPECIFICATIONS

	Control panel	Transmission adaptor
Power supply	50-60Hz 220-240V	
Power consumption	4.8 W	
Size (H x W x D mm)	143 x 296 x 22	107 x 288 x 100
Weight (g)	550	1300

■ PACKING LIST

Parts Name	Q'ty	Application
Control Panel	1	
Transmission Adaptor	1	
Connection Cord (L=215mm)	1	For connecting the control panel and transmission adaptor.
Binder (Push Mount)	4	For mounting the power supply cord and transmission cord.
Binder (Small)	2	For mounting the connection cord.
Tapping Screw (M4 x10mm)	2	For mounting the control panel.

Parts Name	Q'ty	Application
Tapping Screw (M4 x 6mm)	2	
Wood Screw (M4 x 20mm)	6	For mounting the transmission adaptor.
Bushing (ϕ16mm)	3	Use for the knockout.
Bushing (ϕ20mm)	1	Use for the knockout.
Cover	1	
Tooth Washer	2	

■ DIMENSIONS

• Control panel

(Unit : mm)

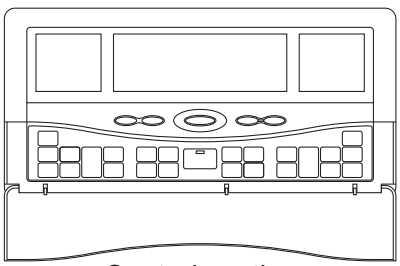

Control section

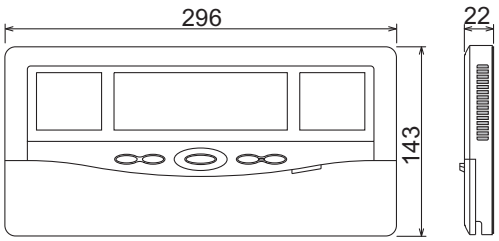

Front View

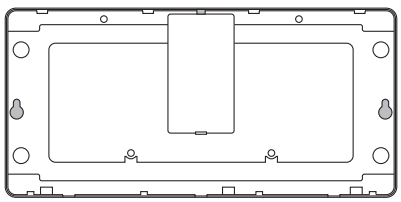

Rear View

• Transmission adaptor

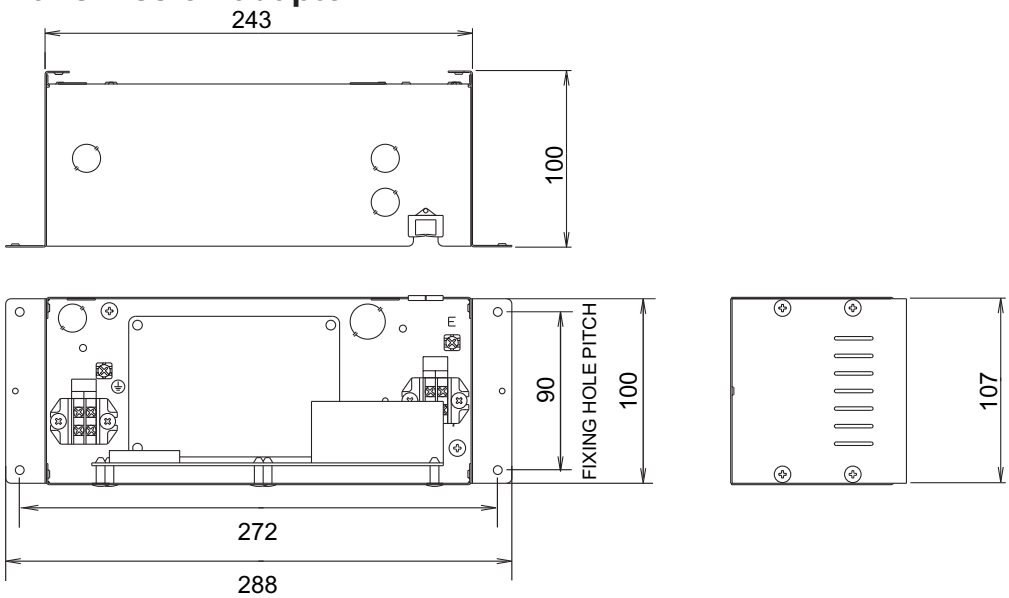

■ WIRING SPECIFICATIONS

Use	Size		Wire type	Remarks
Power supply cable (mm^2)	Maximum	1.25	H07RN-F or equivalent	Single phase 50Hz 220-240V * 2 wire+Ground
	Minimum	0.5		
Transmission cable (mm^2)	0.33		Shielded Level 4 (22AWG)	Non-polar, Twisted pair, Solid core
Fuse capacity (A)	3			

*Always ground the unit.

■ INSTALLATION

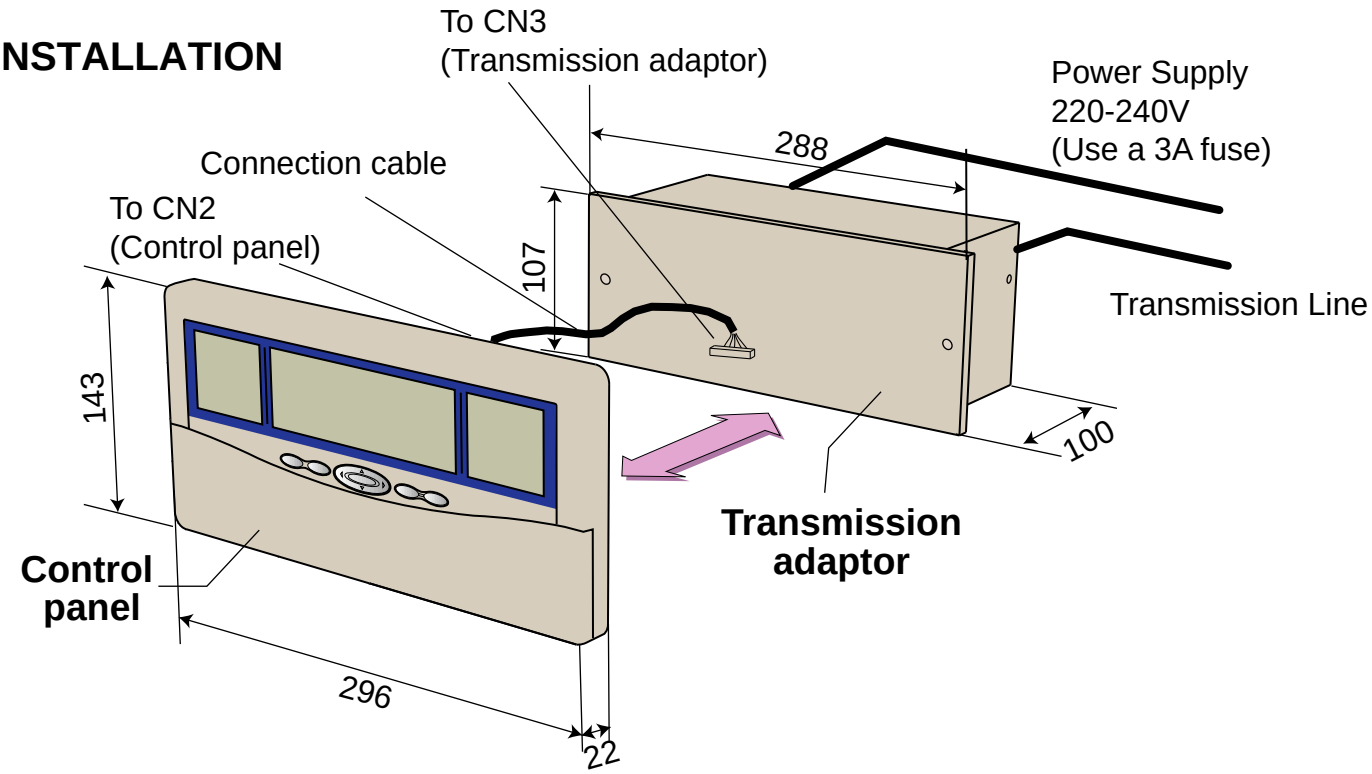

There are 2 ways of set up.

CONTROL SYSTEM

One body set up

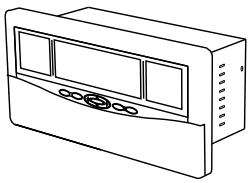

Control panel and transmission adaptor together

Setting Example

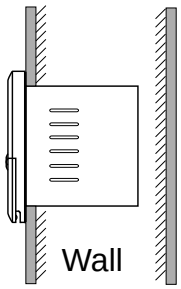

Make a hole in Wall

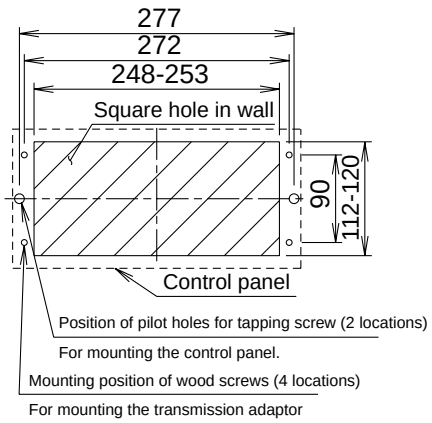

Separated set up

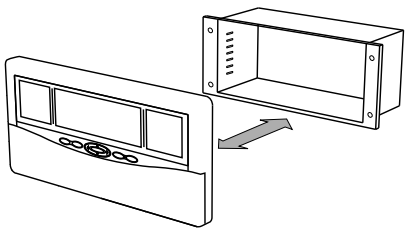

Control panel and transmission adaptor separately

Setting Example

Transmission adaptor

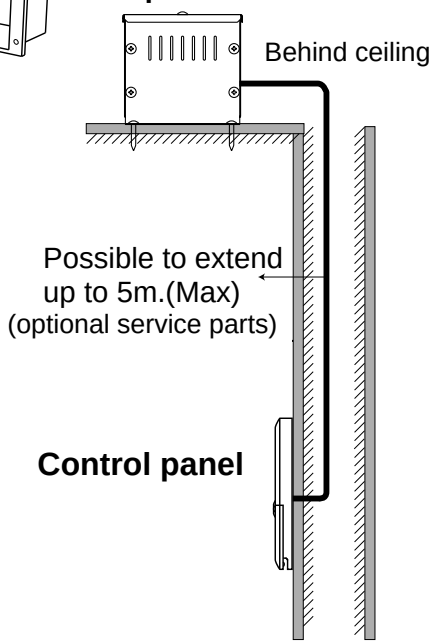

OPTIONAL SERVICE PARTS

5-meters extension cord (service parts) is required when installing the control panel transmission adaptor separately

Please use the part number shown below to order the extension cord from your sales representative

Name and shape	Q'ty	Parts NO
5-meter extension cord 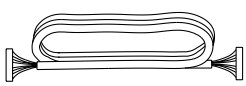	1	9704270016

5-2-3. GROUP REMOTE CONTROLLER

Model : UTB -✱DB (Market region Y or G or T)

■ FEATURES

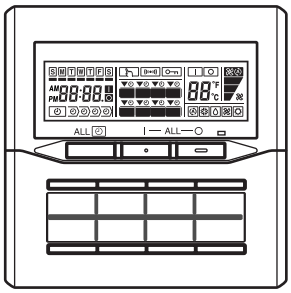

- ✳ Control and monitoring of up to 8 remote controller groups (Max96 indoor units) is possible with one group remote controller.
- ✳ The optional network convertor (Model name: UTR-YRDA) allows up to 4 Group Remote Controllers to be incorporated within the control layout. This flexibility is ideal for a number of different building sizes, types and applications.
- ✳ Up to 64 group remote controllers (with 16 network convertors UTR-YRDA) can be connected in one VRF network system.
- ✳ ON / OFF, operation mode, set temperature, timer control and airflow can be controlled / monitored centrally or individually.
- ✳ Easy installation with a slim shape with no bulge in the back.
- ✳ One-touch ON/OFF operation of each indoor unit is possible. All the indoor units can also be easily operated by pressing an ALL ON, ALL OFF, or ALL TIMER ON/OFF button.

●High performance and compact size

ON / OFF, operating mode, set temperature and air flow can be controlled / monitored centrally or individually.

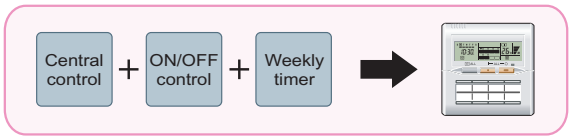

●Built-in weekly timers

The WEEKLY TIMER is provided as a standard function.

1. The timer can be set up for up to 4 times/day. (On/Off, operating mode, set temperature)
2. Allows separate settings for each day of the week.

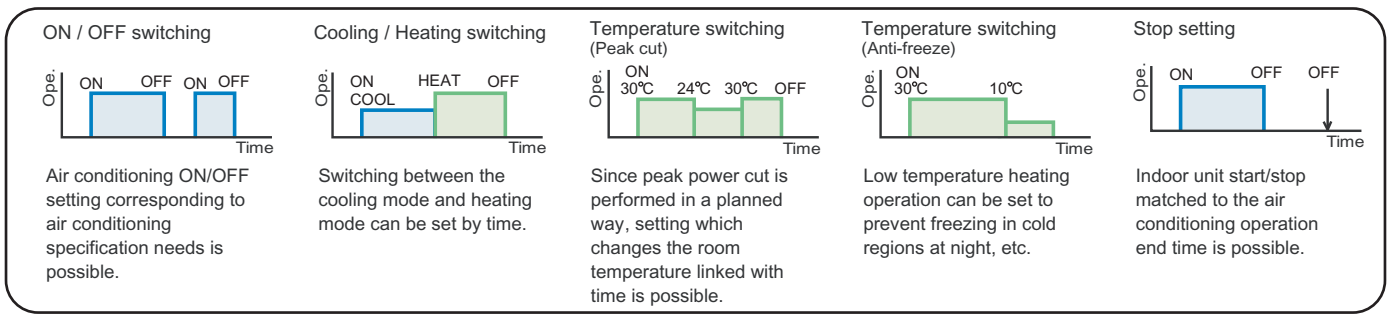

●Control up to 8 remote controller groups

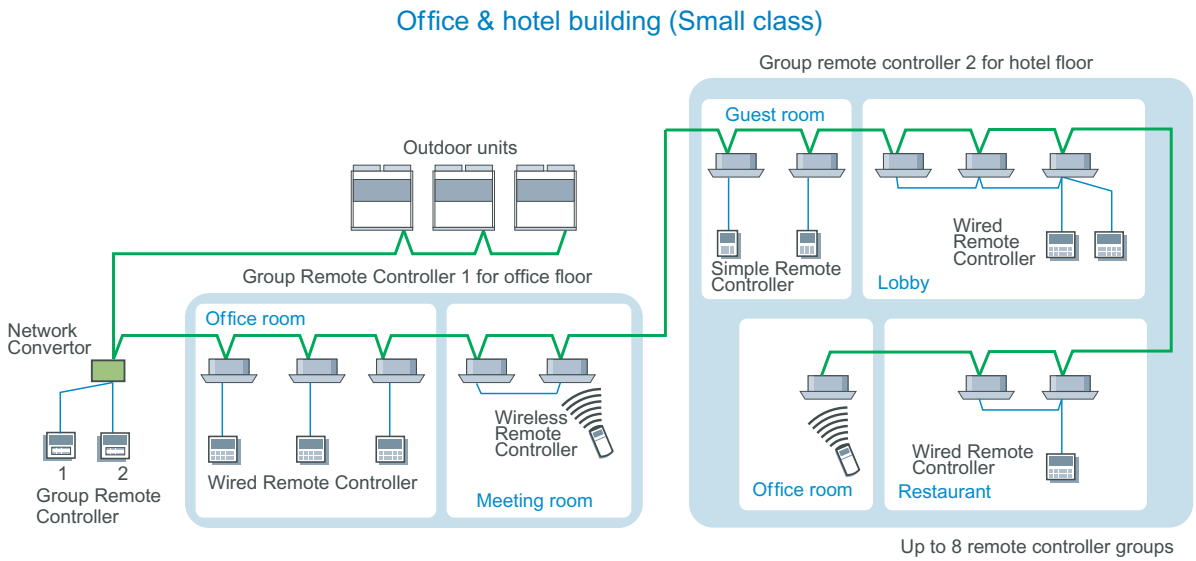

■FUNCTIONS

1 Timer setting at all the connected indoor units is possible by centralized timer on the front panel.

2 All the connected indoor units can be turned on / off simultaneously by centralized ON/OFF button on the front of the cover.

3 The indoor unit can be quickly turned on and off by ON / OFF button of each indoor unit on the front of the door.

With cover closed

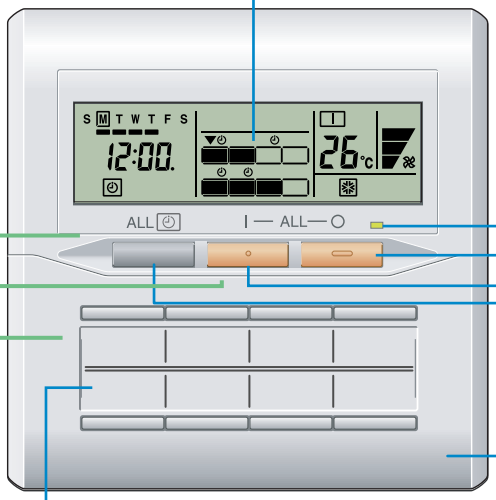

Indoor Unit Operation Indicators
This shows the operating status and timer operation status for each of the indoor units.
■ : On ▭ : Off
◴ : Timer operation ▼ : Selection

Operation Lamp
This is on if any of the indoor units is operating.This flashes if any of the indoor units has malfunction(s).

ALL OFF Button
Press the ALL OFF button to turn off all of the indoor units.

ALL ON Button
Press the ALL ON button to turn on all of the indoor units.

ALL TIMER Button
Press the ALL TIMER button to turn the timer operation on or off for all indoor units.

Start / Stop Button
Press the ON / OFF button to turn the corresponding indoor unit on or off.

Indoor Unit Name Labels
Write the names of the indoor units on the included labels and attach them.

Timer and Clock Display and setting

With cover open

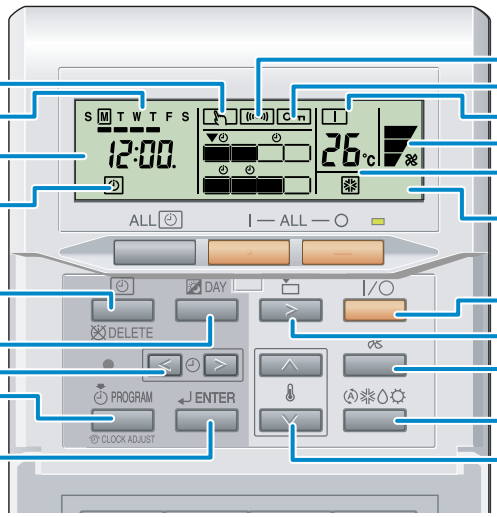

Setting Display
Day Display
Timer and Clock Display
Timer Mode Display
Timer Mode (DELETE) Button
DAY Button
Set Time Button
PROGRAM (CLOCK ADJUST) Button
ENTER Button

Displaying the Status and Contr olling indoor units

Transmission Display
Operation Lock Display
ON / OFF Display
Fan Speed Display
Set Temperature Display
Operation Mode Display
Start / Stop Button
Select Button
Fan Control Button
※1 ※2
Master Control Button
Set Temperature Button

NOTE
※ 1 : "AUTO Ⓐ" and "FAN ※" cannot be selected for "HEAT PUMP TYPE"
※ 2 : "HEAT ☼" cannot be selected for "COOLING ONLY TYPE"

■SPECIFICATIONS

Model name	UTB -✱DB
Size [H x W x D (mm)]	120 x 120 x 17
Weight (g)	200

CONTROL SYSTEM

■SYSTEM DIAGRAM

● **When connecting one group remote controller**

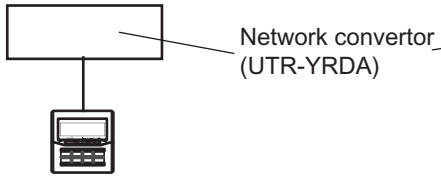

● **When multiple group remote controllers are connected**

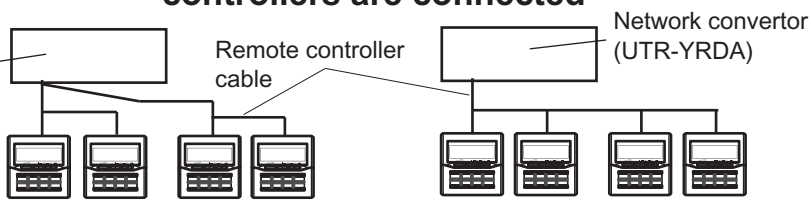

✳ Total remote controller cable length : Max. 100m.

✳ Connectable group remote controller : Max. 4units / convertor.

✳ Use of a terminal box is recommended when a junction is made in the wiring.

■PACKING LIST

Name	Quantity	Application
Group remote controller	1	
Label	4	Use this for writing the names of the indoor units that have been registered.
Tapping screw(M4x16mm)	2	For installing the remote controller
Binder	1	For remote controller and remote controller cable binding

■ DIMENSIONS

[Unit : mm]

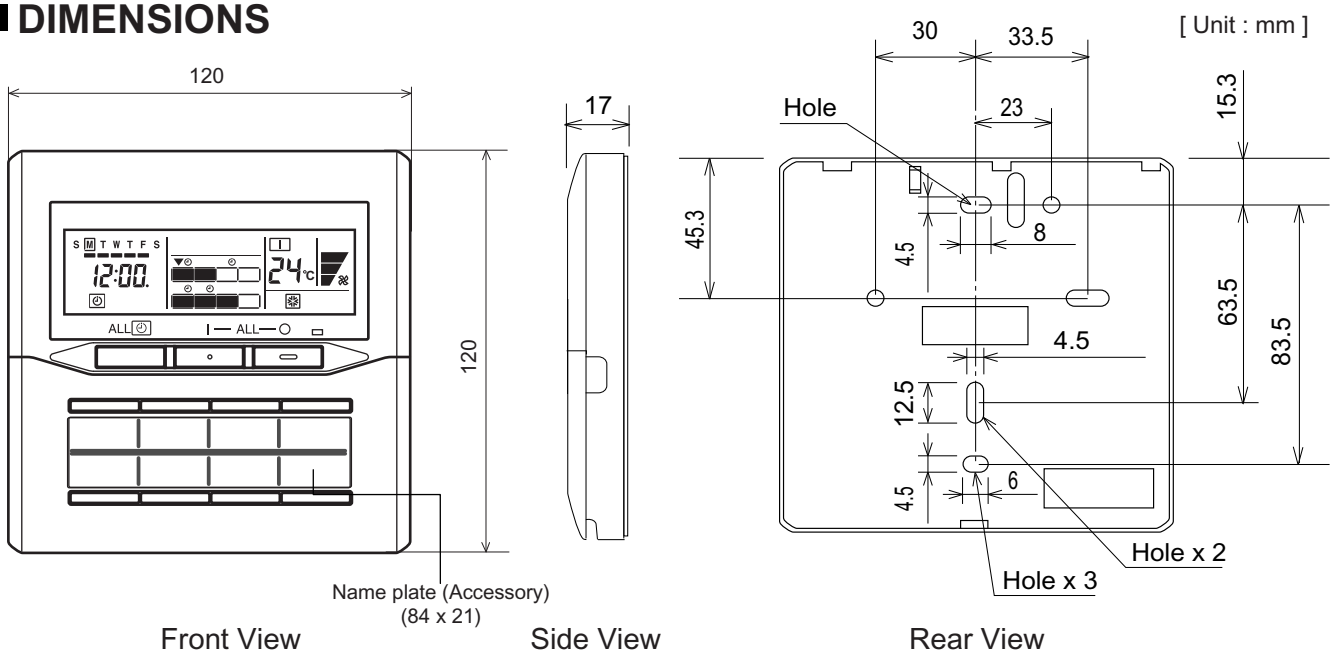

Front View Side View Rear View

■ELECTRICAL WIRING

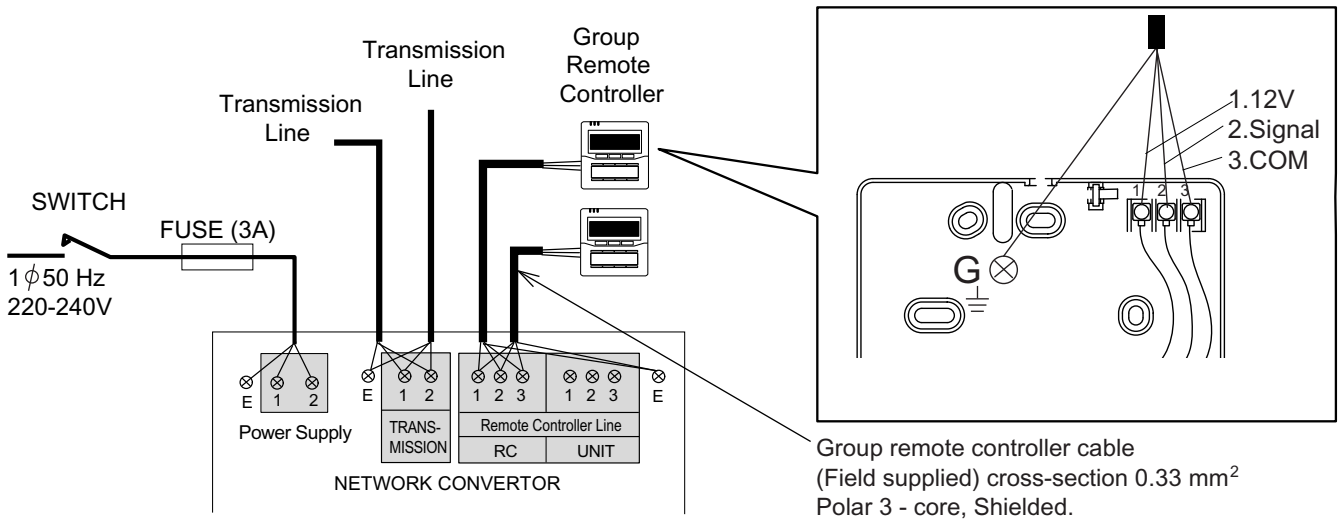

Group remote controller cable
(Field supplied) cross-section 0.33 mm^2
Polar 3 - core, Shielded.

CONTROL SYSTEM

5-2-4. WIRED REMOTE CONTROLLER

Model : UTB - ✱UB (Market region Y or G or T.)

■ FEATURES

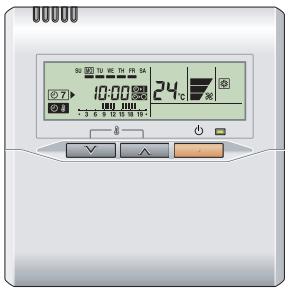

* Various timer setup (ON / OFF / WEEKLY) are possible.
* Equipped with weekly timer as standard function.
  (2 times Start / Stop per day for a week)
* When setting up a timer, start / stop and a temperature setup can be changed.
* When a failure occurs,the error code is displayed.
* Error history.(Last 16 error codes can be accessed.)
* Up to 16 indoor units can be simultaneously controlled.
* The room temperature can be controlled by being detective the temperature accurately with Built-in thermo sensor.

● Powerful features and compact size

Thermo sensor + Weekly timer + Setback timer = Wired remote controller

● Accurate and comfortable

Indoor temperature can be detected accurately by the inclusion of a thermo sensor in the body of the wired controller.
Our system can correspond to various scenes.
This new wired remote controller and the optional remote sensor allows flexibility in sensor location, suitable for all requirements.

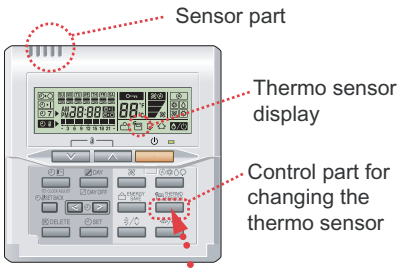

● Built-in timers

Weekly timer

Possible to set ON/OFF time to operate twice each day of the week.

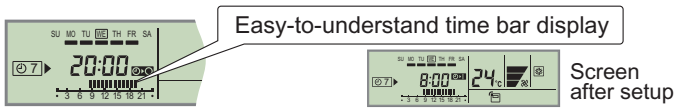

Setup screen example
(Set to Wednesday: 8:00 to 20:00.)

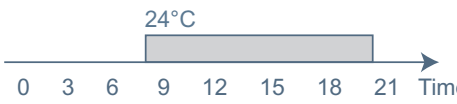

Setback timer

Possible to set temperature for two time spans and for each day of the week.

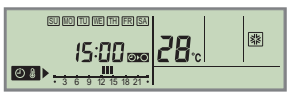

Setup screen example
(Set from Sunday to Saturday: 12:00 to 15:00, 28 °C.)

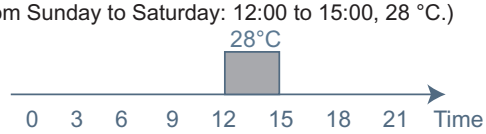

At "Weekly timer" + "Set back timer" setup

24°C→28°C →24°C

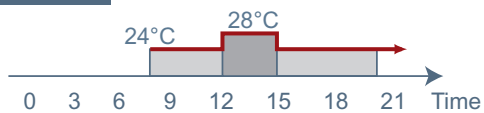

● Easy-to-understand operation

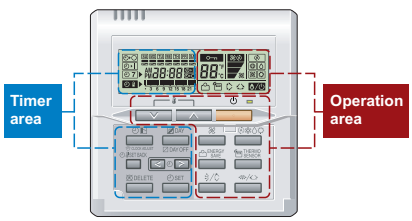

[Variable timer control]

The operation/display sections are zoned according to time and operation, enabling variable programming to match application.

● Simple installation

Components are compatible with standard switch boxes. Flat back construction allows equipment to be installed wherever it is needed.

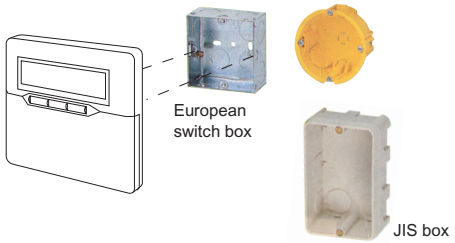

CONTROL SYSTEM

■ FUNCTIONS

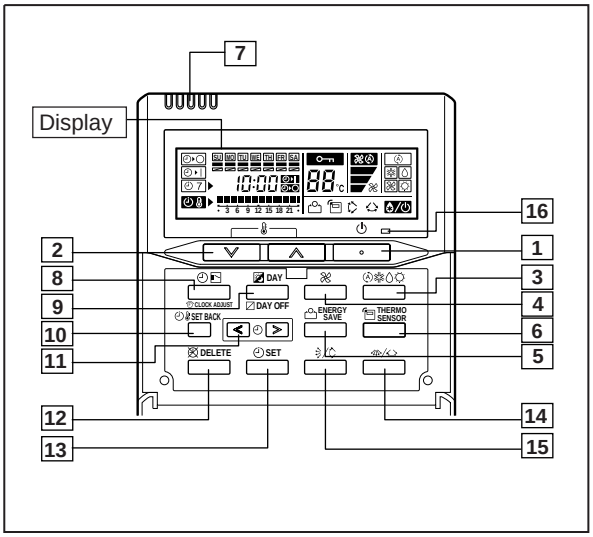

Display panel

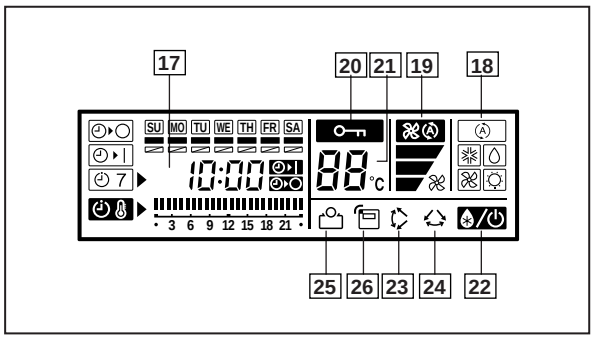

1 START/STOP button
Pressed to start and stop operation.

2 Set Temperature button
Selects the setting temperature.(18-30℃[COOL], 10-30℃[HEAT])

3 Master control button
Selects the operating mode (AUTO Ⓐ ※1, COOL❄, DRY💧, FAN✻ ※1, HEAT☼ ※2).

4 Fan control button
Selects the fan speed (AUTO✻Ⓐ, LOW▬✻, MED▬✻, HIGH▬✻).

5 Energy save button

6 Thermo sensor button
Selects whether the room temperature is detected at the indoor unit (remote sensor) or the remote controller.

7 Built-in thermo sensor
Detect room temperature.

8 Timer mode (CLOCK ADJUST) button
Selects the timer mode (OFF TIMER, ON TIMER, WEEKLY TIMER)
Set the current time.

9 Day (DAY OFF) button
Temporarily cancels of one day timer.

10 Set back button
Pressed select the set back timer.

11 Set time button
Pressed to select the set back timer.

12 Delete button
The schedule of a weekly timer is deleted.

13 Set button
Sets the date, hour, minute and on-off time.

14 Horizontal air flow direction and swing button
Push for two seconds to change the swing mode.

15 Vertical air flow direction and swing button
Push for two seconds to change the swing mode

16 Operation lamp
Lights during operation and when the timer is on.

17 Timer and clock display

18 Operation mode display

19 Fan speed display

20 Operation lock display

21 Temperature display
Displayed temperature is set temperature.

22 Defrost display
Indicates during the oil recovery and defrosting operation.

23 Vertical swing display

24 Horizontal swing display

25 Energy save display

26 Thermo sensor display

■SPECIFICATIONS

Model name	UTB - ✱ UB
Size [H x W x D (mm)]	120 x 120 x 17
Weight (g)	160

NOTE
※ 1 : "AUTO Ⓐ" and "FAN✻" cannot be selected for "HEAT PUMP TYPE"
※ 2 : "HEAT☼" cannot be selected for "COOLING ONLY TYPE"

CONTROL SYSTEM

■ SYSTEM DIAGRAM

● 1 remote controller ● 2 remote controllers

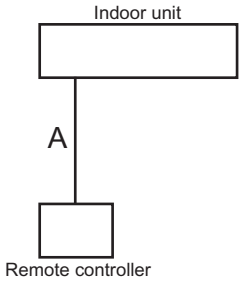

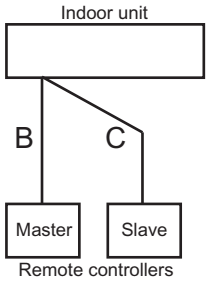

A , B , C : Remote controller cable. Refer to 6-4-4 for detail specifications.
A ≦ 500m ; B+C ≦ 500m

■ PACKING LIST

Name	Quantity	Application
Wired remote controller	1	
Remote controller cable ✱1)	10m	For connecting the remote controller (Exclude some models)
Tapping screw (M4 x 16mm)	2	For installing the remote controller
Binder	1	For remote controller and remote controller cable binding

✱1) If necessary , use shielded cable (Field supplied) in accordance with the standard of the country.

■ DIMENSIONS

[Unit : mm]

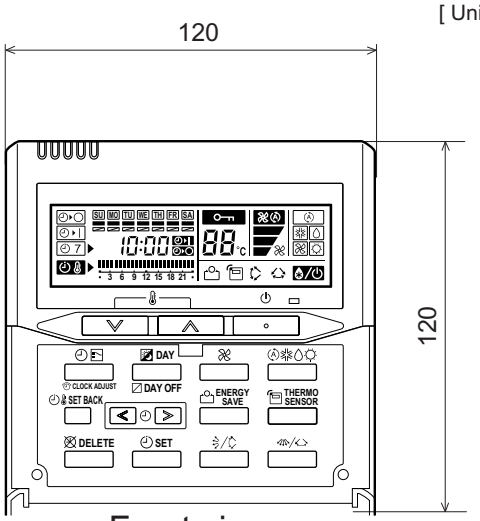

Front view

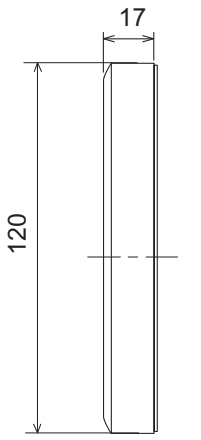

Side view

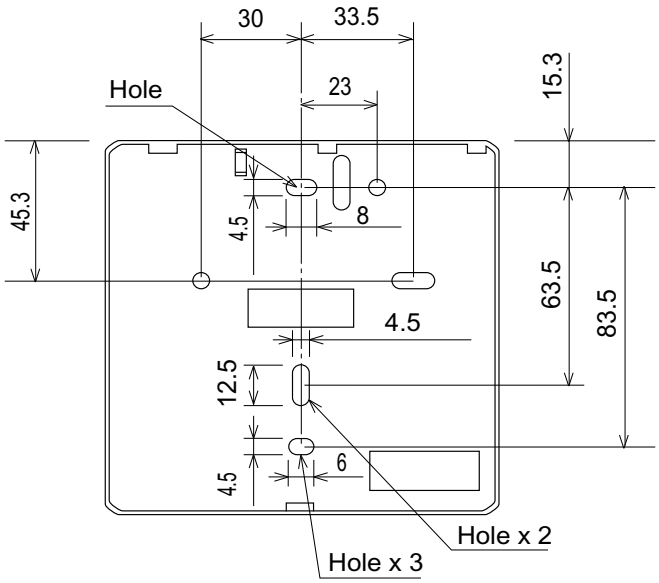

Rear view

■ ELECTRICAL WIRING

● 1 remote controller

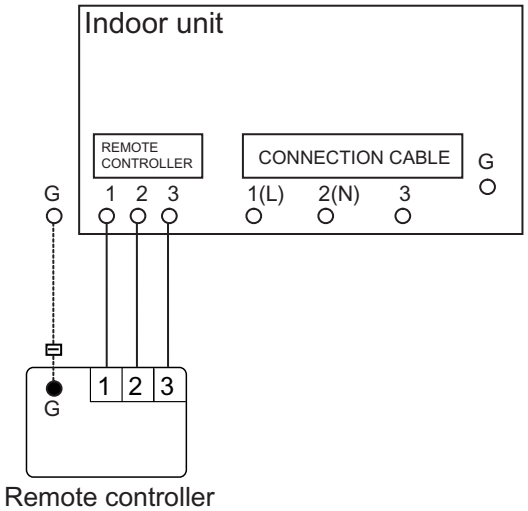

Remote controller

● 2 remote controllers

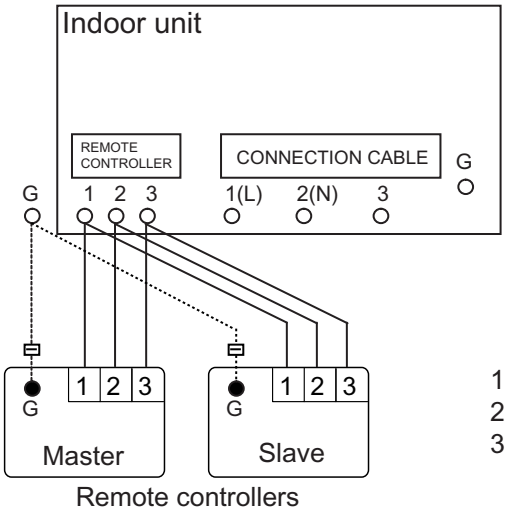

Remote controllers

1 (RED) : 12V
2 (WHITE) : Signal
3 (BLACK) : COM

5-2-5. SIMPLE REMOTE CONTROLLER (With MASTER CONTROL)

Model : UTB -✱PB (Market region Y or G or T)

■ FEATURES

- ✳ Easy operation.
- ✳ Built-in back ground light function.
- ✳ Easy installation with a slim shape with no bulge in the back.
- ✳ Error history.(Last 16 error codes can be accessed.)
- ✳ Up to 16 indoor units can be simultaneously controlled.
- ✳ Can be installed onto SW-BOX. (applies to European and other country's standard)

● User-friendly operation

- ✳ Provides access to basic operations, such as Start / Stop, Fan control, master control switching, and temperature setting.
- ✳ A large Start / Stop button is provided in the centre of the remote controller unit for easy operation.
- ✳ Following an error display, diagnostics can be carried out on the controller.

CONTROL SYSTEM

● Back ground light

- ✳ Backlight enables easy operation in a darkened room.
- ✳ Backlight activates during all button operations, and lasts 10 seconds in operating mode and 5 seconds in stop mode after a button is pressed.

● Simple installation

- ✳ Can be mounted on the European mounting Box (installation dimension: 60mm) or the JIS Built-in Box (installation dimension: 83.5mm).

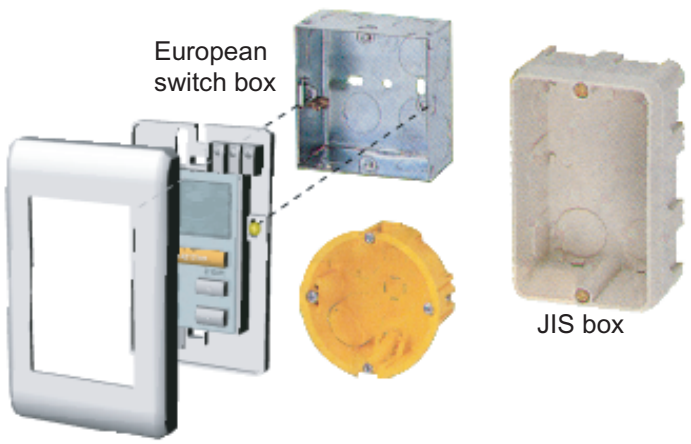

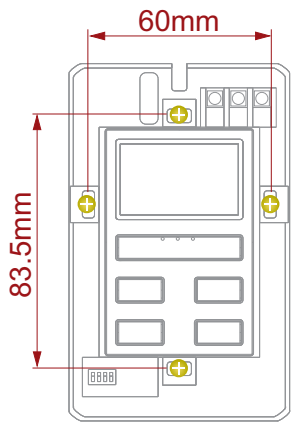

■ FUNCTIONS

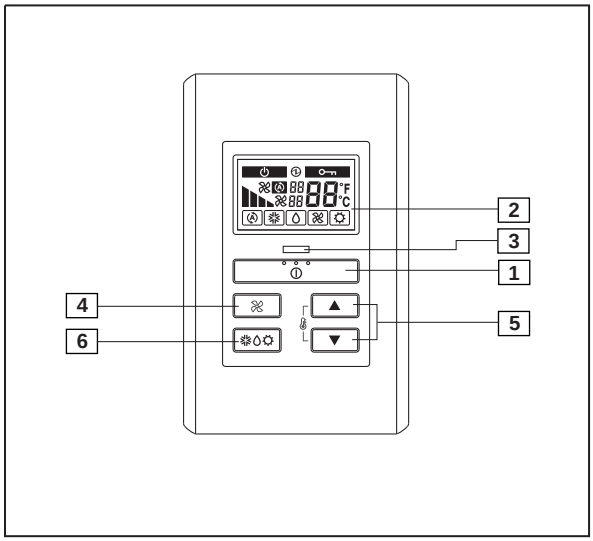

Display panel

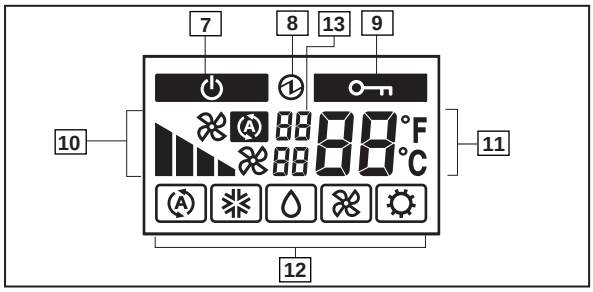

1 START/STOP button
Pressed to start and stop operation

2 Display background light
Lights during operation.

3 Operation lamp
Lights during operation.

4 Fan control button
Selects the fan speed (AUTO※, HIGH, MED, LOW).

5 Set temperature button
Selects the setting temperature.(18-30℃[COOL], 16-30℃[HEAT])

6 Master control button
Selects the operating mode (AUTO※1, COOL, DRY ,
FAN※1, HEAT※2).

7 Standby display
Indicates during the oil recovery and defrosting operation.

8 Power source display
Indicates the main power ON.

9 Central control display
Indicates when function is locked from central remote controller or PC controller.

10 Fan speed display

11 Set temperature
Indicates Error history number.✱4)
Indicates Indoor unit address.✱5)

12 Operation mode display

13 (Upper) Indicates the error code✱3)✱4) / the refrigerant system address. ✱5)
(Lower) Indicates the remote controller address.✱3)✱4)✱5)

✱3)during self Diagnosis mode.
✱4)during Error code history display mode.
✱5)during address display mode.

NOTE
※1 : "AUTO" and "FAN" cannot be selected for "HEAT PUMP TYPE"
※2 : "HEAT" cannot be selected for "COOLING ONLY TYPE"

■ SPECIFICATIONS

Model name	UTB - ✱PB
Size [H x W x D (mm)]	120 x 75 x 14
Weight (g)	90

■ SYSTEM DIAGRAM

● 1 remote controller

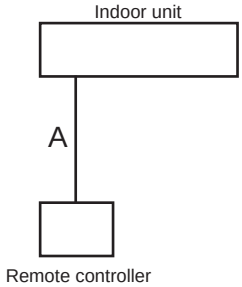

● 2 remote controllers

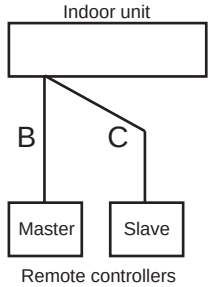

A , B , C : Remote controller cable. Refer to 6-4-4 for detail specifications.
A ≦ 500m ; B+C ≦ 500m

CONTROL SYSTEM

■ PACKING LIST

Name	Quantity	Application
Simple remote controller	1	
Remote controller cable ✱6)	10m	For connecting the remote controller (Exclude some models)
Tapping screw(M4x16mm)	2	For installing the remote controller
Binder	1	For remote controller and remote controller cable binding

✱6) If necessary , use shielded cable (Field supply) in accordance with the standard of the country.

■ DIMENSIONS

[Unit : mm]

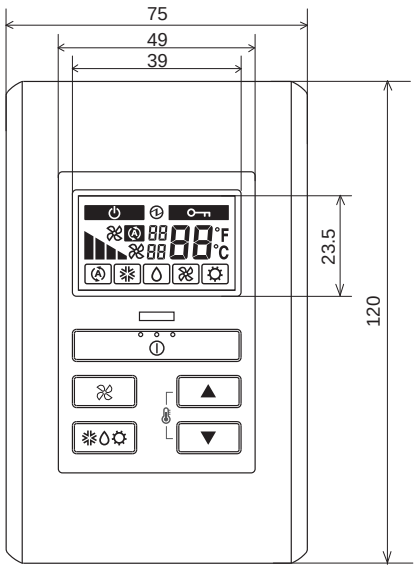

Front View

Side View

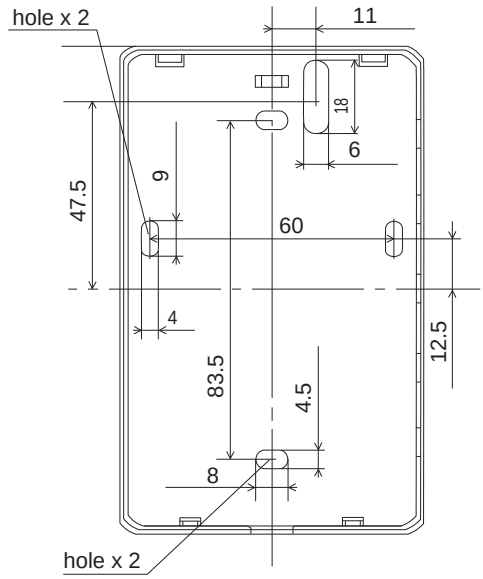

Rear View

■ ELECTRICAL WIRING

● 1 remote controller

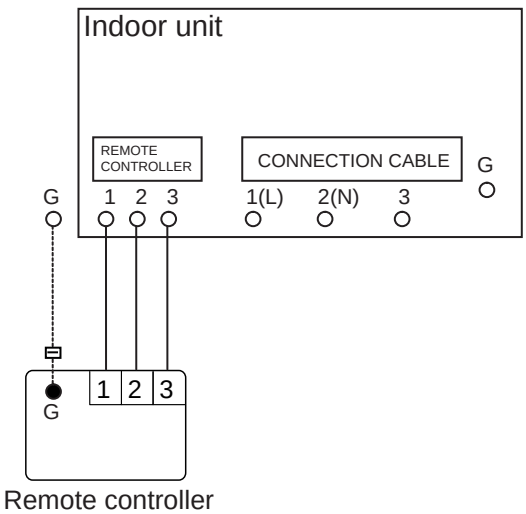

Remote controller

● 2 remote controllers

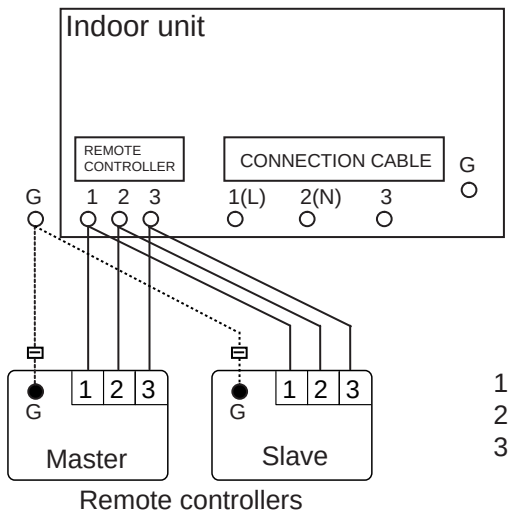

Remote controllers

1 (RED) : 12V
2 (WHITE) : Signal
3 (BLACK) : COM

CONTROL SYSTEM

5-2-6. SIMPLE REMOTE CONTROLLER (Without MASTER CONTROL)

Model : UTB -✱RA (Market region Y or G or T)

A part of function is limited. It is recommended to use it together with other type controller.

■ FEATURES

- ✳ Easy operation.
- ✳ Built-in Back Light function.
- ✳ Easy installation with a slim shape with no bulge in the back.
- ✳ Error history.(Last 16 error codes can be accessed.)
- ✳ Up to 16 indoor units can be simultaneously controlled.
- ✳ Can be installed onto SW-BOX. (applies to European and other country's standard)
- ✳ Concentrates on the basic operations such as On/Off, Fan Control, and Temperature Setting.

● User-friendly operation

- ✳ Provides access to basic operations, such as Start / Stop, Fan Control, and Temperature Setting.
- ✳ A large Start / Stop button is provided in the centre of the remote controller unit for easy operation.
- ✳ Following an error display, diagnostics can be carried out on the controller.

CONTROL SYSTEM

CONTROL SYSTEM

● Back ground light

- ✳ Backlight enables easy operation in a darkened room.
- ✳ Backlight activates during all button operations, and lasts 10 seconds in operating mode and 5 seconds in stop mode after a button is pressed.

● Simple installation

- ✳ Can be mounted on the European mounting Box (installation dimension: 60mm) or the JIS Built-in Box (installation dimension: 83.5mm).

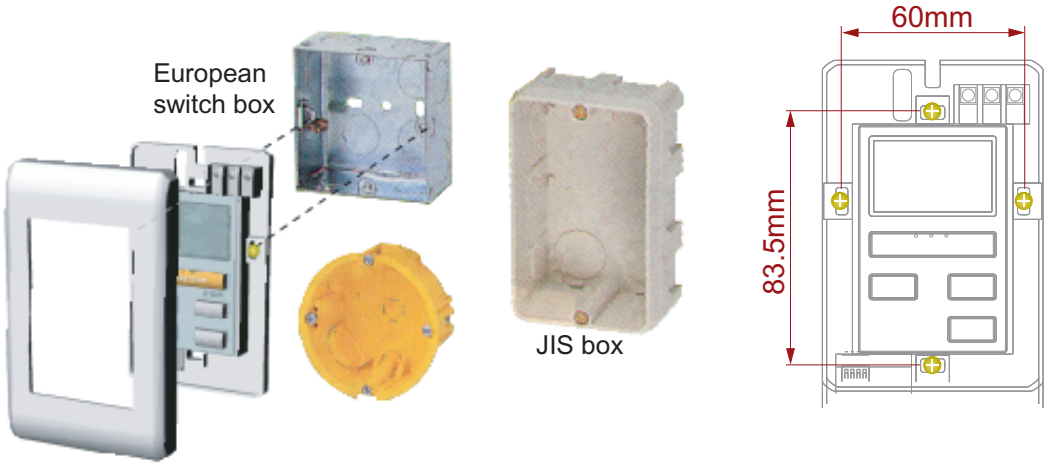

■FUNCTIONS

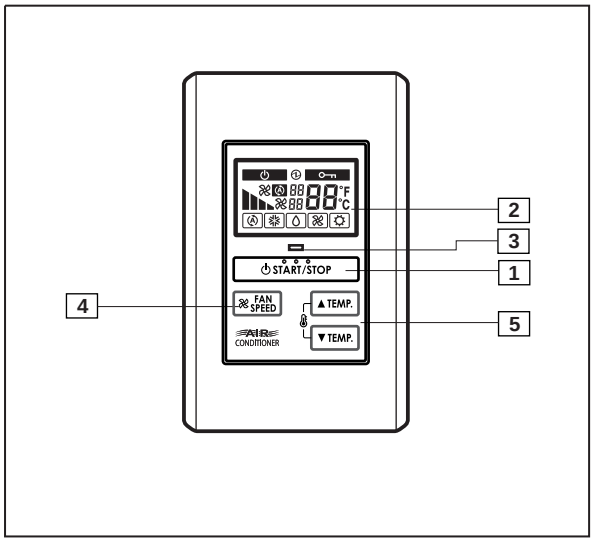

1 START/STOP button
Pressed to start and stop operation

2 Display background light
Lights during operation.

3 Operation lamp
Lights during operation.

4 Fan control button
Selects the fan speed (AUTO, HIGH, MED, LOW).

5 Set temperature button
Selects the setting temperature.(18-30°C[COOL], 16-30°C[HEAT])

6 Standby display
Indicates during the oil recovery and defrosting operation.

7 Power source display
Indicates the main power ON.

8 Central control display
Indicates when function is locked from central remote controller or PC controller.

9 Fan speed display

10 Set temperature
Indicates Error history number.✱2)
Indicates Indoor unit address. ✱3)

11 Operation mode display

12 (Upper) Indicates the error code✱1)✱2) / the refrigerant system address.✱3)
(Lower) Indicates the remote controller address. ✱1)✱2)✱3)

✱1) during self Diagnosis mode.
✱2) during Error code history display mode.
✱3) during address display mode.

Display panel

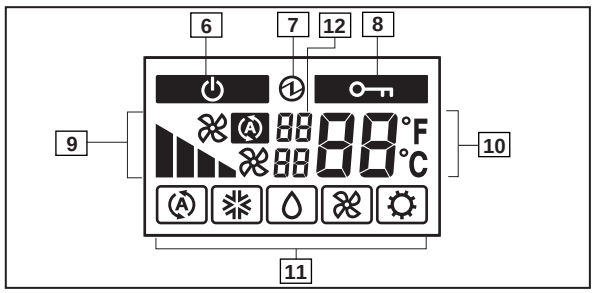

CONTROL SYSTEM

CONTROL SYSTEM

■SPECIFICATIONS

Model name	UTB - ✱RA
Size [H x W x D (mm)]	120 x 75 x 14
Weight (g)	90

■ SYSTEM DIAGRAM

● 1 remote controller

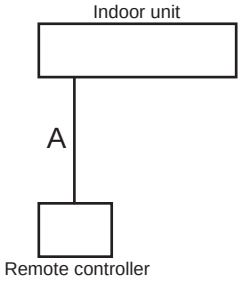

● 2 remote controllers

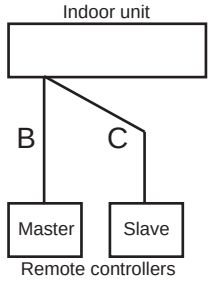

A , B , C : Remote controller cable. Refer to 6-4-4 for detail specifications.
A ≦ 500m ; B+C ≦ 500m

■ PACKING LIST

Name	Quantity	Application
Simple remote controller	1	
Remote controller cable ✱4)	10m	For connecting the remote controller (Exclude some models)
Tapping screw(M4x16mm)	2	For installing the remote controller
Binder	1	For remote controller and remote controller cable binding

✱4) If necessary , use shielded cable (Field supply) in accordance with the standard of the country.

■ DIMENSIONS

[Unit : mm]

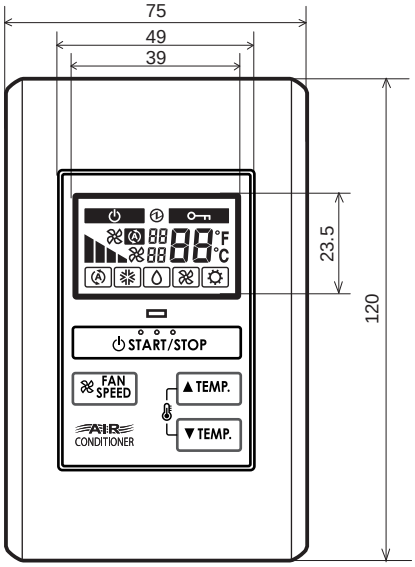

Front View

Side View

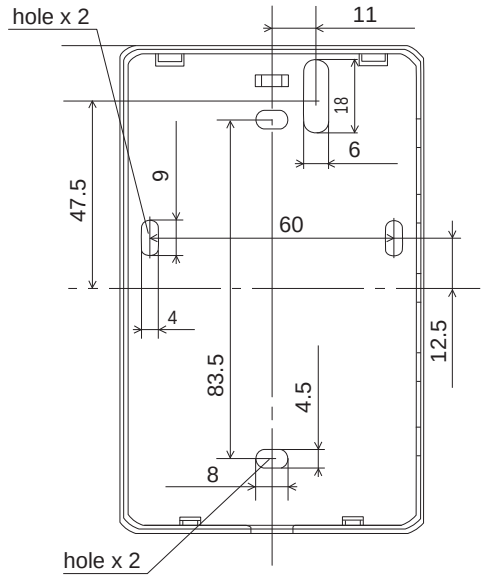

Rear View

■ ELECTRICAL WIRING

● 1 remote controller

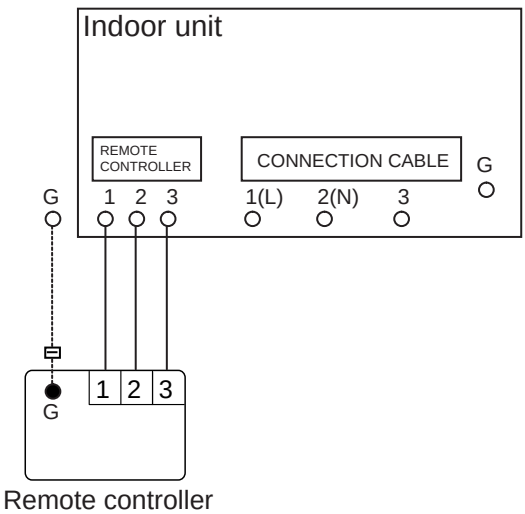

Remote controller

● 2 remote controllers

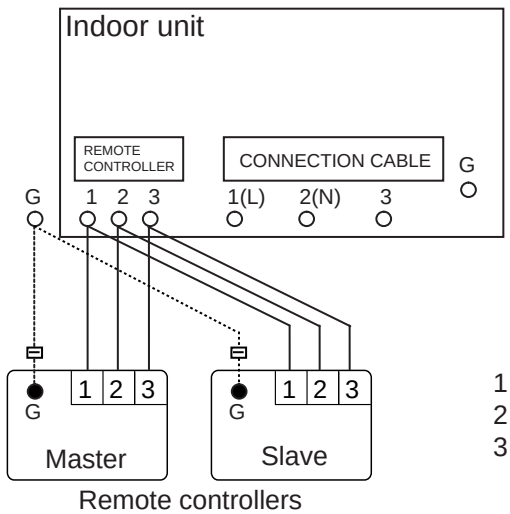

Remote controllers

1 (RED) : 12V
2 (WHITE) : Signal
3 (BLACK) : COM

CONTROL SYSTEM

5-2-7. WIRELESS REMOTE CONTROLLER

Model : UTB -✱VB (Market region Y or G)

■ FEATURES

- ✳ Four kinds of timer setup (ON / OFF / PROGRAM / SLEEP) are possible.
- ✳ Up to 16 indoor units connected within the remote controller group can be simultaneously controlled.
- ✳ Can be used jointly with wired remote controllers .
- ✳ Easy to change custom code (4 patterns) by button operation.

● Built-in timers

Select from four different timer programs (On / Off / Program / Sleep).

● Program timer

The program timer operates the ON and OFF timer once within a 24 hour period.

● Sleep timer

The sleep timer function automatically corrects the temperature thermostat setting according to the time setting to prevent excessive cooling and heating while sleeping.

Cooling operation / dry operation

When the sleep timer is set, the set temperature automatically rises 1°C every hour. The set temperature can rise up to a maximum of 2°C.

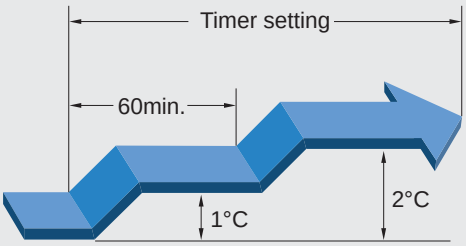

Heating operation

When the sleep timer is set, the set temperature automatically drops 1°C every 30 minutes. The set temperature can drop to a maximum of 4°C.

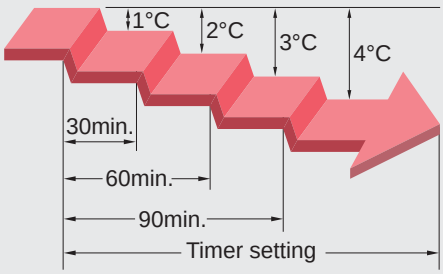

● Easy installation and operation

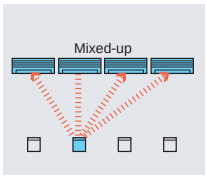

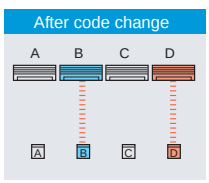

• Code selector switch eliminates unit being wrongly switched.
(Up to 4 codes can be set.)

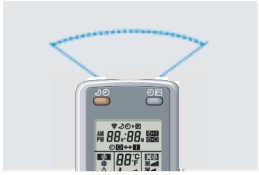

• Wide and precise transmitting range.

● System addressing

• During installation work, system addressing can be performed using the wireless remote controller, thus eliminating manual switch setting.

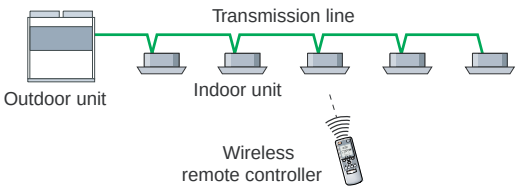

Note : Timer setting from a wireless remote controller becomes invaild, if the indoor unit is connected with a wired or a simple remote controller.

CONTROL SYSTEM

■ FUNCTIONS

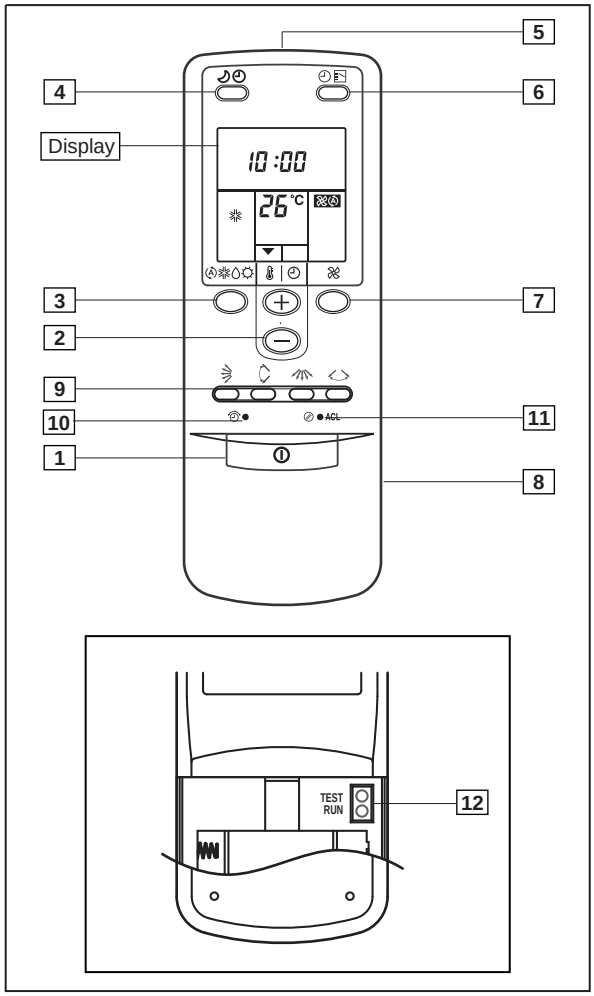

Display panel

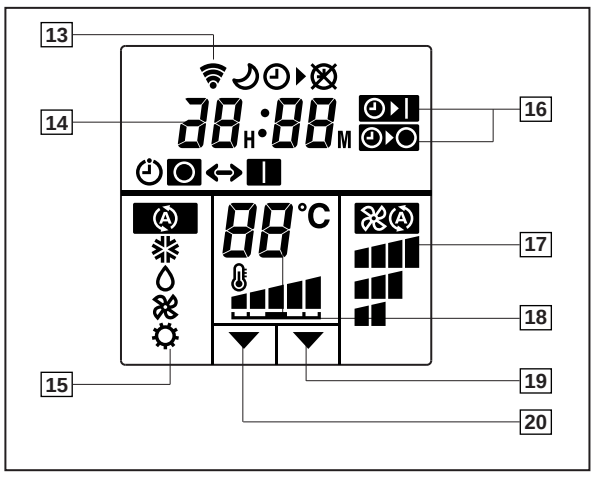

1 START/STOP button
Pressed to start and stop operation

2 Set temp./Set time buttons/Set remote controller custom code buttons
Sets the indoor temp.(From 18-30℃ [Cool] , 16-30℃ [Heat])
Sets the current time and on-off time
Sets R.C. custom code

3 Master control button/Code change
Selects the operating mode (AUTO Ⓐ※1, COOL❋ , DRY◊ , FAN❋ ※1 , HEAT☼ ※2).
Start/end R.C. custom code change. (Max. 4 types)

4 Sleep timer button
Pressed to select sleep timer.

5 Signal transmitter

6 Timer button
Pressed to select the timer mode. (OFF TIMER, ON TIMER, PROGRAM TIMER, TIMER RESET)

7 Fan control button
Selects the fan speed (AUTO❋Ⓐ, HIGH ,MED ,LOW).

8 Battery compartment lid

9 Air flow direction button
Used to set the desired air flow direction & swing function.

10 Time adjust button
Sets the current time.

11 ACL button
Used when replacing batteries or change the code.

12 Test run button
Used when testing the air conditioner after installation.

13 Transmit indicator

14 Clock display

15 Master control display

16 Timer mode display

17 Fan speed display

18 Set temperature display

19 Timer set indicator

20 Temperature set indicator

NOTE
※1 : "AUTO Ⓐ" and "FAN❋ " cannot be selected for "HEAT PUMP TYPE"
※2 : "HEAT☼ " cannot be selected for "COOLING ONLY TYPE"

CONTROL SYSTEM

■ SPECIFICATIONS

Model name	UTB - ✱ VB
Size [H x W x D (mm)]	158 x 56 x 20
Weight (g)	70

■ SYSTEM DIAGRAM

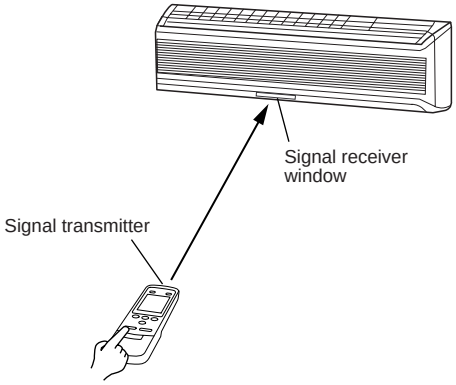

✱ Control signal might not be recognized in following cases:
(i) A curtain or a wall, etc. exists between transmitter and receiver.
(ii) There is an instant-start type (inverter type, etc.) fluorescent lamp in the room.

✱ Air conditioner might not work correctly when strong light hits the signal receiver window. Shut off the direct sunlight and also make illuminator far away from the receiver window.

CONTROL SYSTEM

■ PACKING LIST

Name	Quantity	Application
Remote controller	1	Use for air conditioner operation
Remote controller holder	1	Use as remote controller holder
Tapping screw	2	For remote controller holder installation
Battery [1.5V (R03 / LR03 / AAA) x 2]	2	For remote controller

■ DIMENSIONS [Unit : mm]

● **Holder**

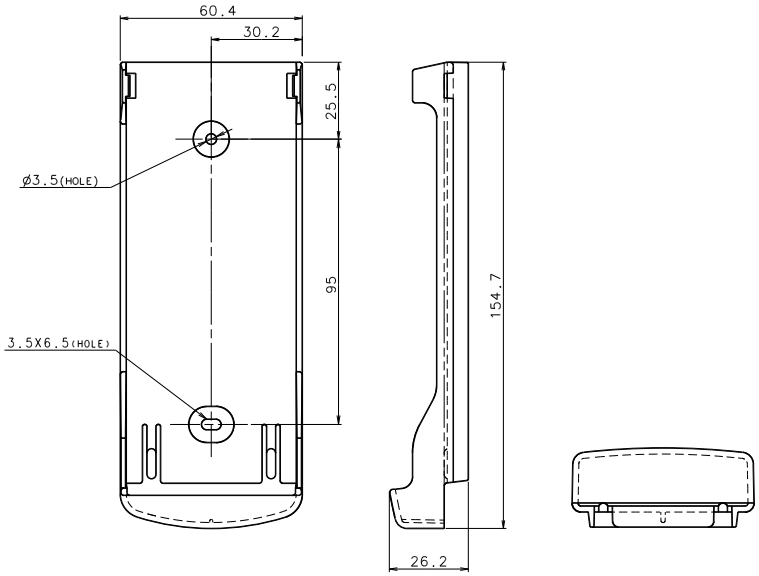

Front view Side view Bottom view

● **Controller**

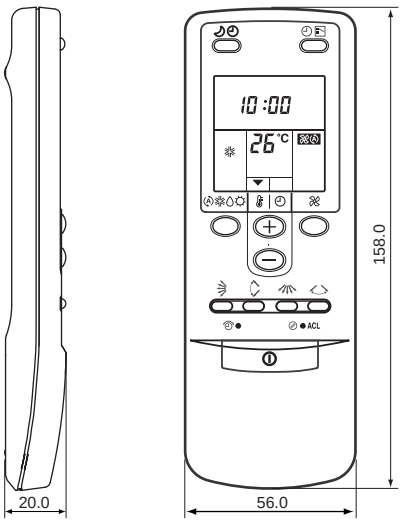

Side view Front view

5-2-8. IR RECEIVER UNIT

Model : UTB - ∗WA

■ FEATURES

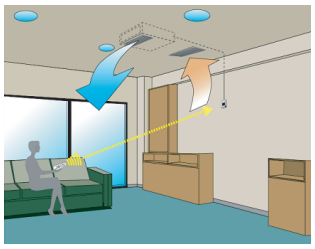

Duct type indoor unit can be controlled with wireless remote controller if the IR receiver unit is used.

■ FUNCTIONS

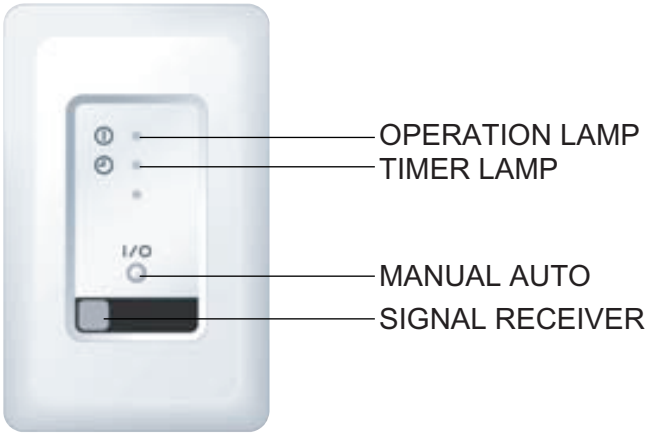

■ SPECIFICATIONS

Model name	UTB - ∗ WA
Size [H x W x D (mm)]	145 x 90 x 30
Weight (g)	150

■ SYSTEM DIAGRAM

● ATTACHMENT RANGE

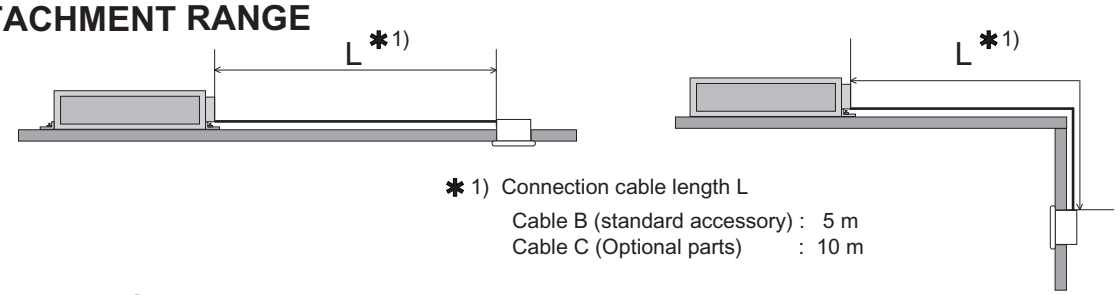

✱1) Connection cable length L
Cable B (standard accessory) : 5 m
Cable C (Optional parts) : 10 m

● SIGNAL ANGLE

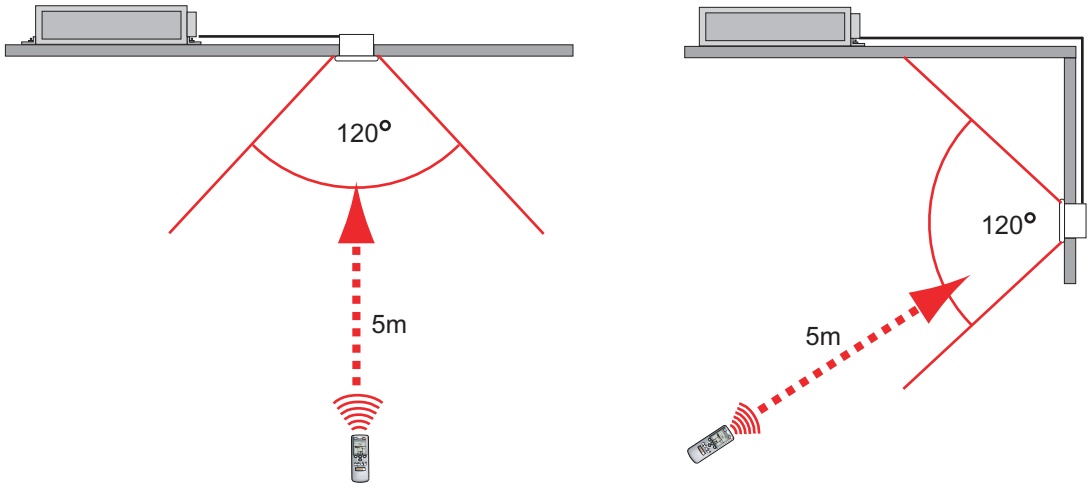

■ PACKING LIST

Name	Quantity
Holder (PCB)	1
PCB assy	1
Bracket (Holder)	1
Holder cover	1
Screw	4
Connection cable B (5m)	1

■ DIMENSIONS

[Unit : mm]

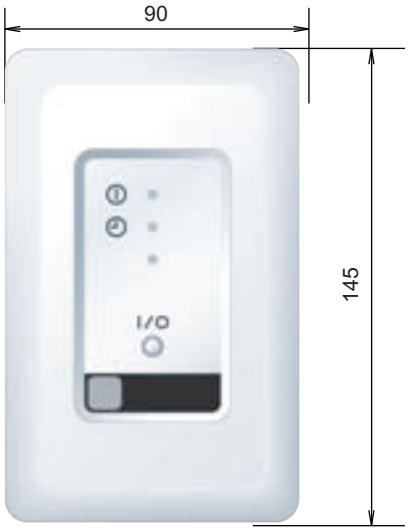

Front View

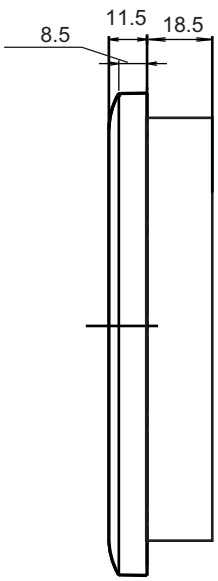

Side View

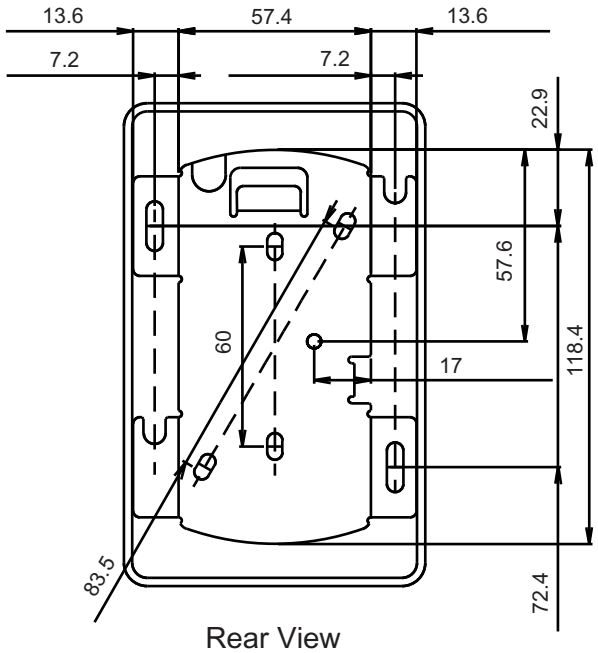

Rear View

■ ELECTRICAL WIRING

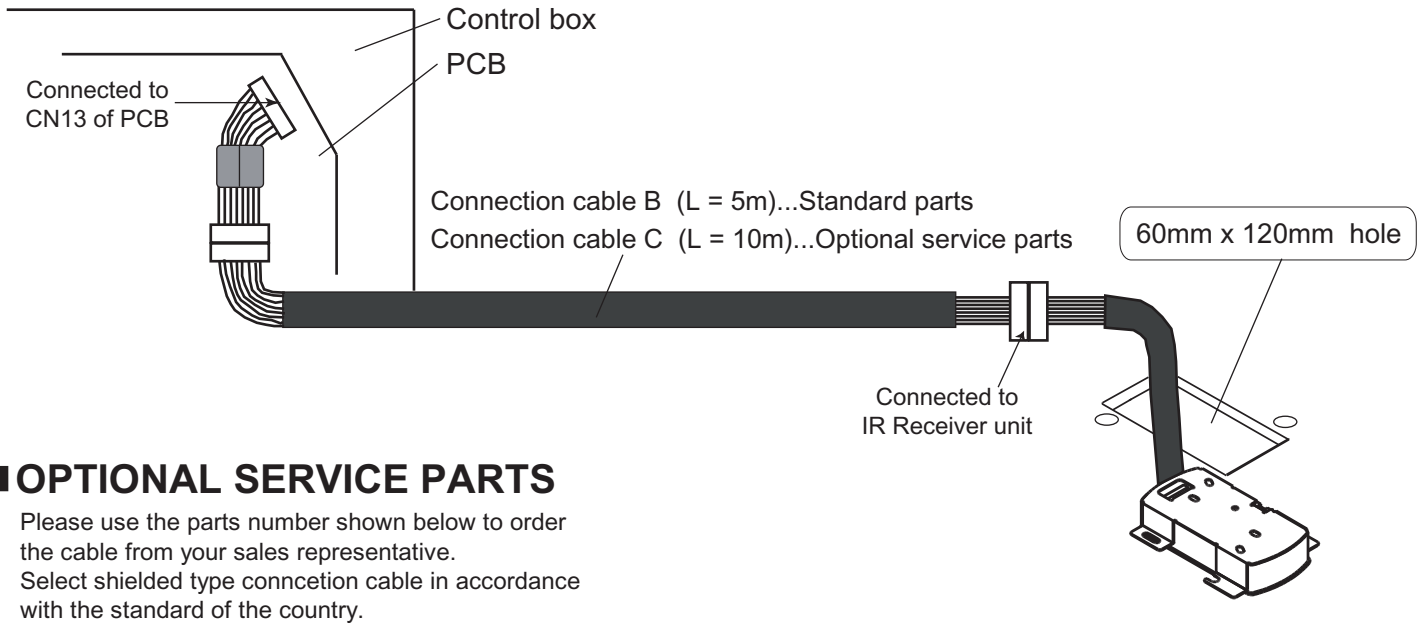

■ OPTIONAL SERVICE PARTS

Please use the parts number shown below to order the cable from your sales representative.
Select shielded type conncetion cable in accordance with the standard of the country.

Parts name	Type	Parts No.
Connection cable C	Non-shielded	9378143012
	Shielded	9378143036

CONTROL SYSTEM

5-2-9. GROUP CONTROL METHOD

■ REMOTE CONTROLLER GROUP

✳ Wired, wireless and simple remote controllers can be used jointly in the following combinations.

Example of combination for "Remote controller group"

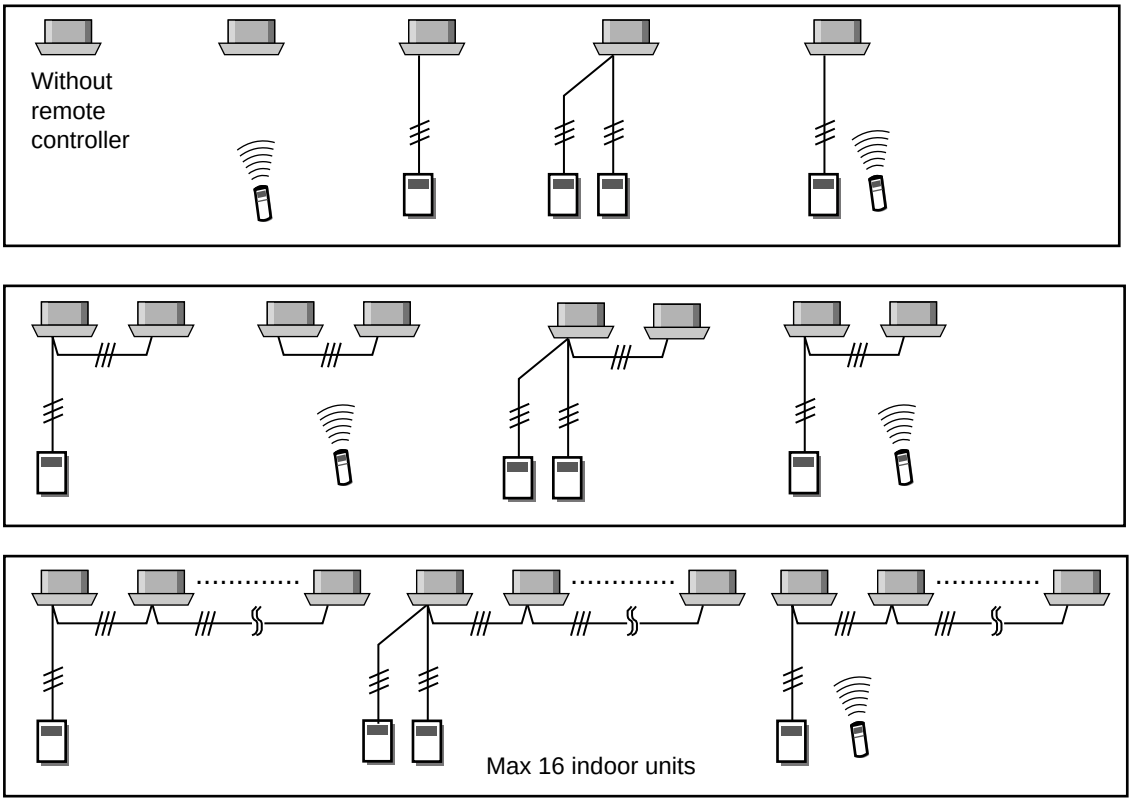

Connectable indoor unit : 1-16
Connectable remote controller : 0 - 2

● Note

1. Indoor units in same remote controller group will be same operation.
2. "Remote controller group" spanning the refrigerant system is not allowed.

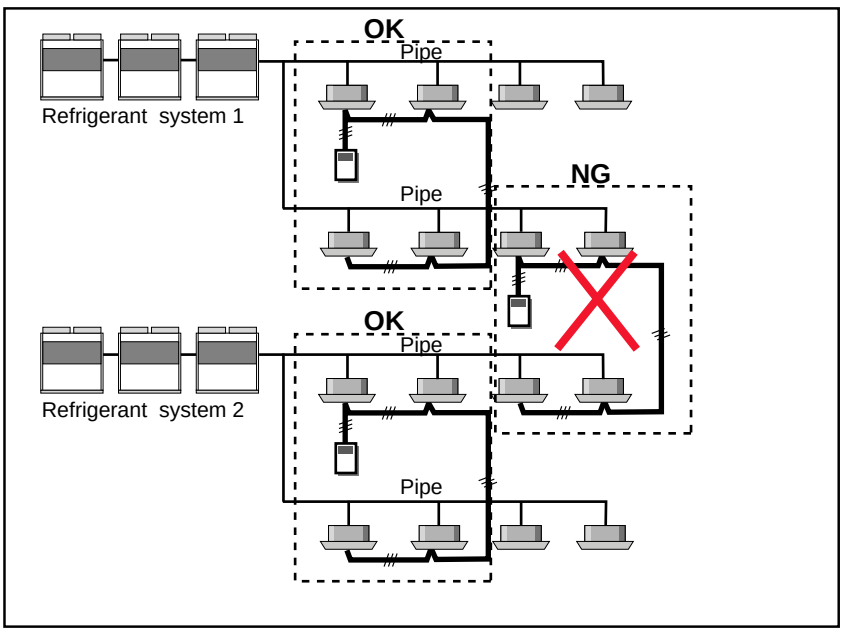

3. When using 2 remote controller.

✳ Last command is priority.
(operation mode might be fixed by system operation.)

✳ Timer setting function become invalid for slave remote controller or wireless remote controller.

CONTROL SYSTEM

■ GROUP

This function is used when operating a multiple number of remote controller group at one time from the central remote controller or PC controller.

Example of "Group"

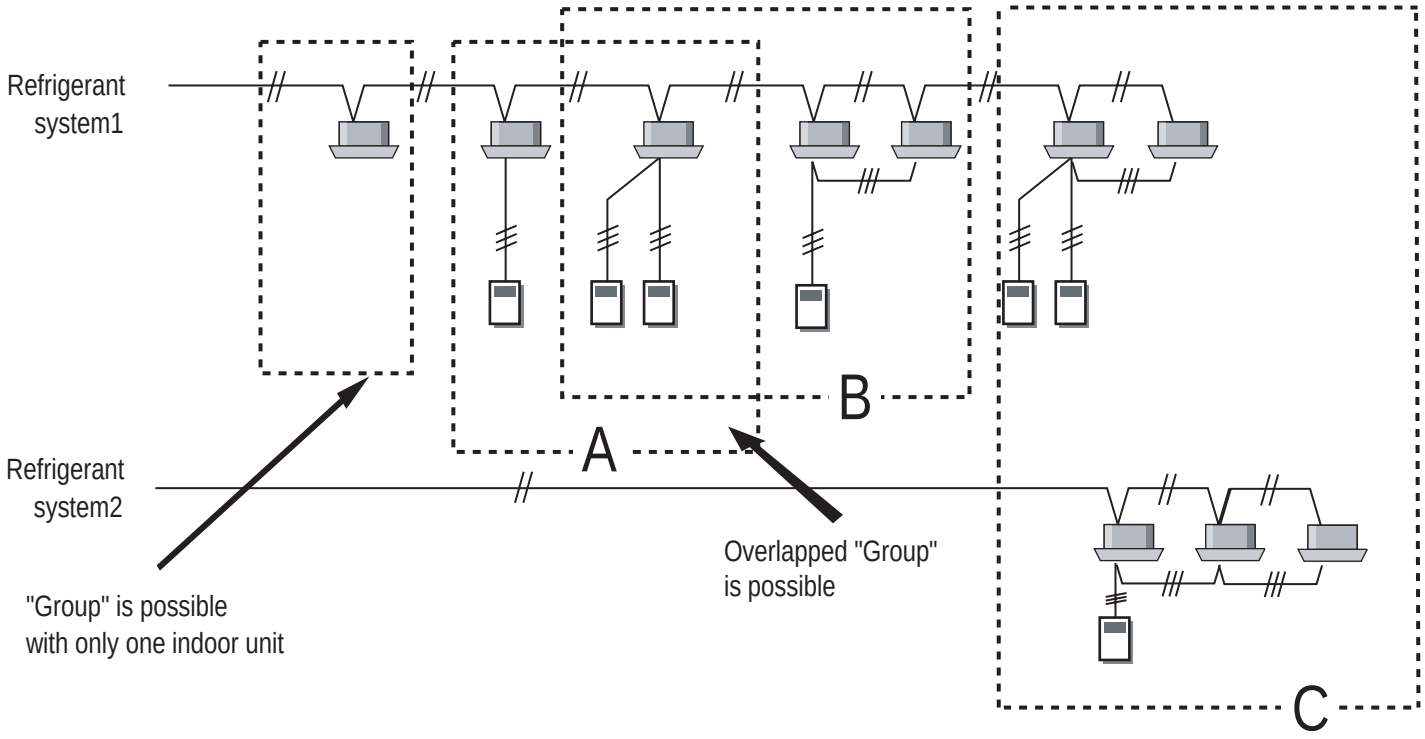

CONTROL SYSTEM

- ✳ Operation of either A group or B group is possible.
- ✳ Simulataneous operation of A group and B group is possible. (Last setting has priority)
- ✳ As shown in drawing "C","Group" spanning the refrigerant systems is possible.
- ✳ It is very convenient that PC controller can assign the title on each group.

5-2-10.COMPARISON TABLE OF CONTROLLERS

■ LIST OF CONTROLLER FUNCTION

Item		PC controller (software)	Central remote controller	Group remote controller	Wired remote controller	Wireless remote controller	Simple remote controller	Simple*2 remote controller
Model		UTR-YOTB	UTB-YCA UTB-GCA	UTB-YDB UTB-GDB	UTB-YUB UTB-GUB UTB-TUB	UTB-YVB UTB-GVB	UTB-YPB UTB-GPB UTB-TPB	UTB-YRA UTB-GRA UTB-TRA
Max. controllable remote controller groups		400	400	8	1	1	1	1
Max. controllable indoor units		400	400	96	16	16	16	16
Max. controllable groups		400	64	—	—	—	—	—
Air conditioning control function	On / Off	●	●	●	●	●	●	●
	Operating mode setting	●	●	●	●	●	●	—
	Fan speed setting	●	●	●	●	●	●	●
	Room temp. setting	●	●	●	●	●	●	●
	Test operation	●	●	—	●	●	●	—
	Up / down air direction flap setting	●	●	—	●	●	—	—
	Right / left air direction flap setting	●	●	—	●	●	—	—
	Auto restart *1	●	●	●	●	●	●	●
	Group setting	●	●	—	—	—	—	—
	RC prohibition	●	●	—	—	—	—	—
Display	Failure	●	●	●	●	—	●	●
	Defrosting	●	●	—	●	—	●	●
	Current time	●	●	●	●	●	—	—
	Day of week	●	●	●	●	—	—	—
	RC prohibition	●	●	—	●	—	●	●
	Cooling / heating priority	●	●	●	●	—	●	●
	Address display	●	●	●	●	—	●	●
Timer	On / Off timer	●	●	—	●	●	—	—
	Weekly timer	●	●	●	●	—	—	—
	Sleep timer	—	—	—	—	●	—	—
	Program timer	—	—	—	—	●	—	—
	On / Off per day	72	2	2	2	1	—	—
	On / Off per week	504	14	14	14	—	—	—
	Day off	●	●	—	●	—	—	—
	Min. unit of timer setting (Minutes)	10	10	10	30	5		
Control	Status monitoring system	●	—	—	—	—	—	—
	Electricity charge calculation	●	—	—	—	—	—	—
	Error history	●	●	●	●	—	●	●

*1. Auto restart can be set by DIP switch on PCB inside of indoor unit.
*2. This controller is not available "master control" function.

CONTROL SYSTEM

5-3. ADAPTOR / CONVERTOR UNITS

The following types of convertors and adaptors are available with the FUJITSU GENERAL LIMITED'S VRF network system.

- **Network Convertor (UTR-YRDA)**

  ① To be used for connecting single split type system with VRF network system
  (A change of DIP switch setting is necessary)

  ② To be used for connecting group remote controller(s) with VRF network system

- **Network Convertor for LONWORKS® (UTR-YLLA)**

  For connection between VRF system and a LONWORKS® open network for management of small to medium-sized BMS and VRF network system.

- **BACnet® Gateway (UTR-YLBA : Software)**

  The central control of maximum 1600 indoor units can be realized by connecting the VRF network system to the BACnet, a global standard for open networks.

- **Signal Amplifier (UTR-YRPC)**

  When the total length of transmission line exceeds 500m, or the number of units exceeds 64, Signal amplifier will be necessary.

- **Transmission Adaptor (UTR-YTMA)**

  For the air condition of the medium and large size building, the control software can control and monitor the air conditioners together with the ones in the other buildings.

- **External Switch Controller (UTR-YESA)**

  Air conditioner switching can be controlled by connecting other sensor switches.

CONTROL SYSTEM

5-3-1. NETWORK CONVERTOR

Model : UTR - YRDA

① To be used for connecting single split type system with VRF system
[A change of DIP switch setting is necessary]

■ FEATURES

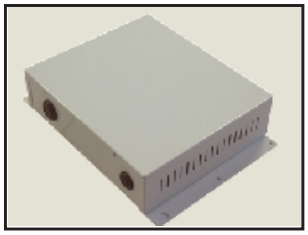

- ✳ With this network convertor, single split type, big multi type and J series air conditioners can be controlled by central remote controller, PC controller in VRF network system or by wired remote controller that is connected to the Network convertor.
- ✳ ON/OFF, operation mode, temperature setting, fan speed, etc. can be done with these controllers.
- ✳ Up to 16 indoor units can be connected to and controlled with one network convertor.
- ✳ 2 wired remote controllers are possible for one network convertor.
- ✳ Up to 100 network convertors can be connected in one VRF network system. (One Network convertor is regarded as one refrigerant system. The total refrigerant systems in one VRF network system must be within 100.)

■ APPLICABLE MODELS

J series		◯ ✳1
Big Multi type	Simultanuous model	◯
	Individual model	◯
Single Split type	Wired RC model ✳2 ✳3	◯
	Wireless RC model	×
Window type		×

✳1 Network convertor is necessary for each indoor unit.

✳2 There is inadaptable model in old type.Contact the authorized sales company for confirmation of these models.

✳3 Indoor units which can be controlled from a network convertor are denoted by 'L' , 'U' or 'F' as the control method (remote controller), except the following models.
AR✱7RLB , AR✱9RLB , AR✱12RLB , AR✱14RLB , AR✱18RLB , AR✱18RLBH , AR✱9ALA , AR✱9ALB , AR✱18ALBH , AR✱7ELA , AR✱9ELA , AR✱12ELA , AR✱14ELA , AR✱18ELA.

■ SYSTEM OUTLINE

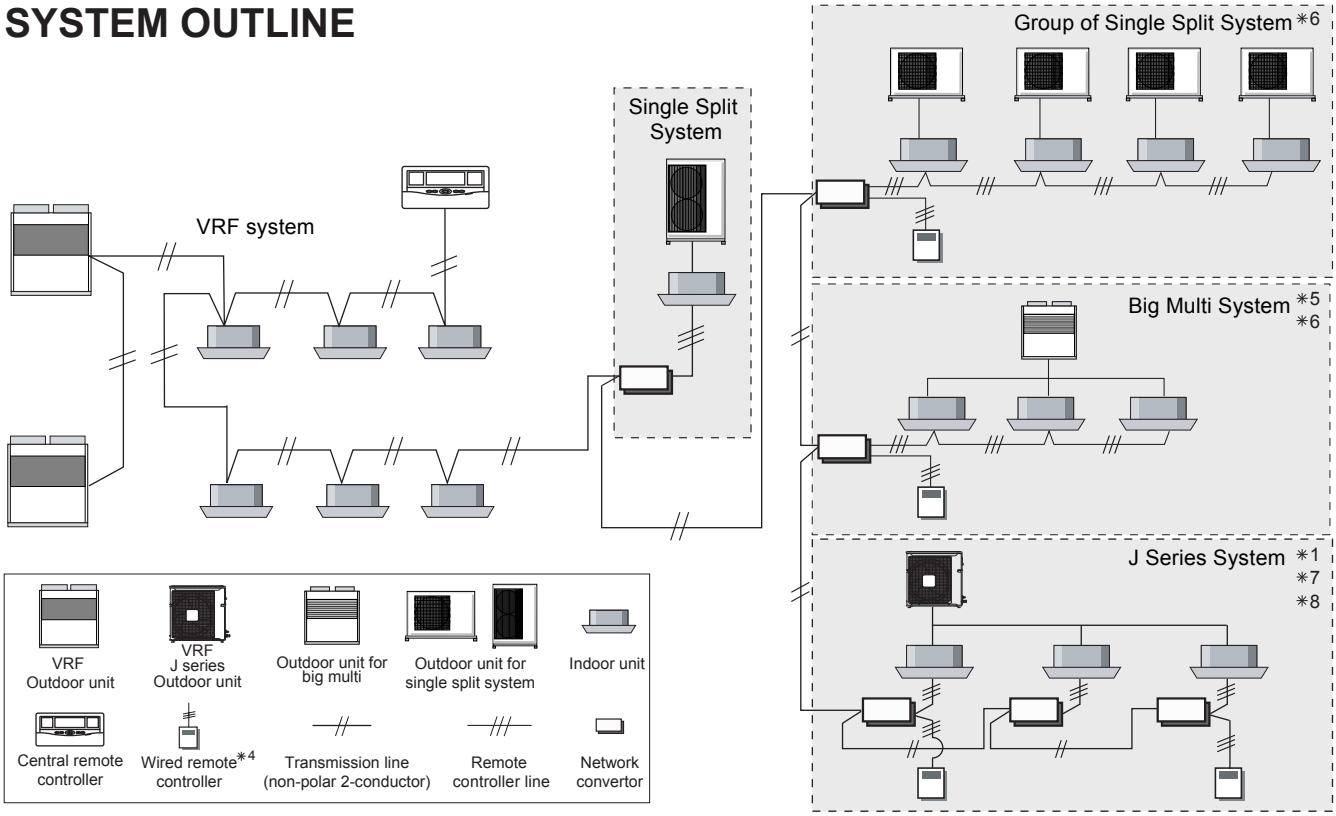

✳4 When connecting an indoor unit that has an 'L' control method, connect the remote controller for VRF (UTB - ✱U✱, UTB - ✱R✱ and UTB - ✱P✱) to control from a wired remote controller. Do not connect the wired remote controller included with the indoor unit.

✳5 Connect one big multi system to one network convertor. Don't connect two big multi system, or one big multi system and one single split system to one network convertor.

✳6 All indoor units connected to a network convertor are operating under same status.

✳7 For controlling J series system, same operation mode should be used in same refrigerant system. When indoor unit is set in different operation mode via central control unit, indoor unit might be in stand by mode.

✳8 For using J series heat pump system, "AUTO" and "FAN" mode should not be used.

CONTROL SYSTEM

■ FUNCTIONS

- ✳ ON / OFF
- ✳ MASTER CONTROL
- ✳ FAN CONTROL
- ✳ TEMPERATURE CONTROL
- ✳ TIMER SETTING
- ✳ CENTRAL CONTROL (Lock the remote controller functions)

■ ELECTRICAL WIRING

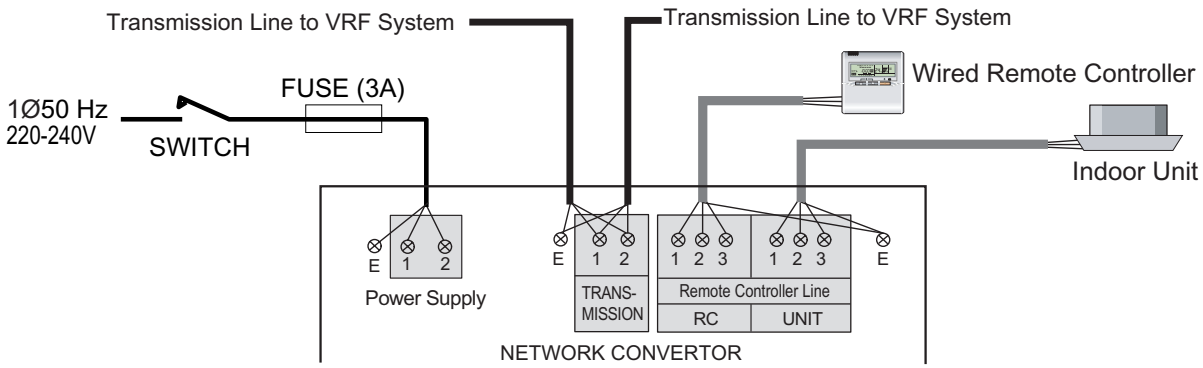

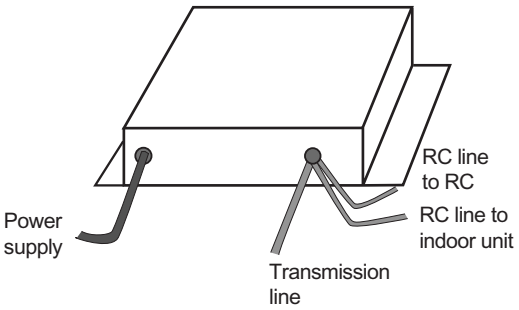

*Do not bind the power cable and remote controller cable to avoid an erroneous operation.

**Use shield cable for transmission line and remote controller line. The shield metal should be grounded.

***Use ground wire to ground the network convertor.

CONTROL SYSTEM

② To be used for connecting group remote controller(s) with VRF system

■ FEATURES

* Up to a total of 16 network convertors and central remote controller can be connected in one VRF network system.
* Four group remote controllers can be connected to one network convertor.
* Two refrigerant systems can be covered by one network convertor.

■ SYSTEM OUTLINE

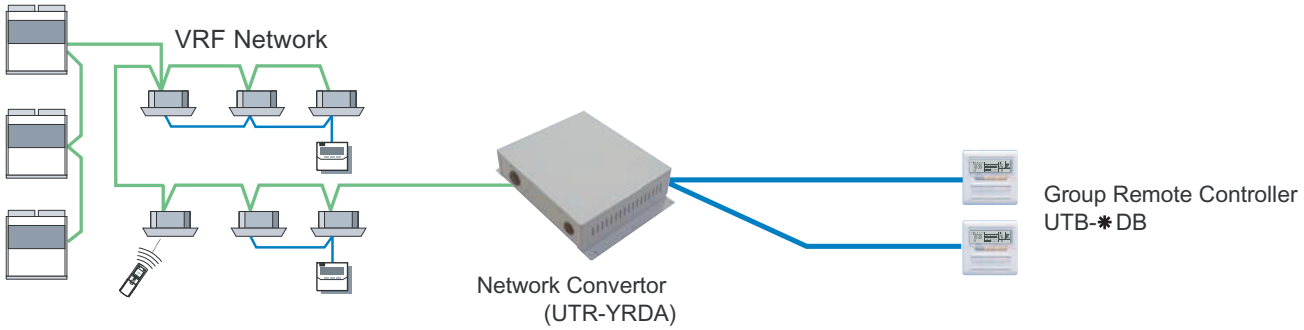

■ ELECTRICAL WIRING

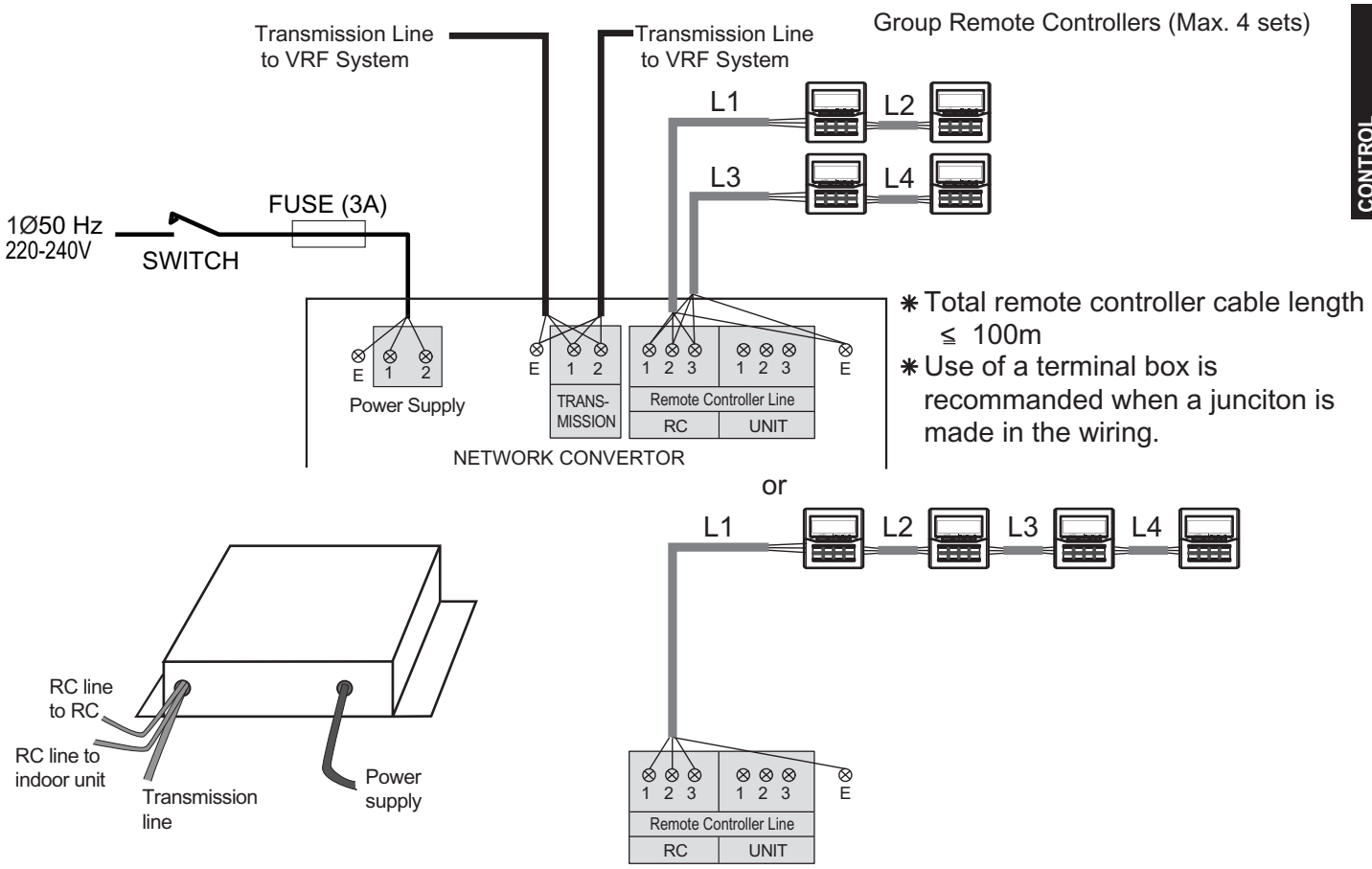

*Do not bind the power cable and remote controller cable to avoid an erroneous operation.

**Use shield cable for transmission line and remote controller line. The shield metal should be grounded.

***Use ground wire to ground the network convertor.

CONTROL SYSTEM

■ SPECIFICATIONS

Power supply	50-60Hz 220-240V
Power consumption (W)	6.5
Size (H X W X D) (mm)	67 X 288 X 211
Weight (g)	1500

■ PACKING LIST

The following installation parts are supplied. Use them as required.

Name/Illustration	Qty.	Application
Network convertor 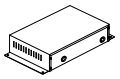	1	
Binder (Push Mount) 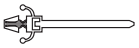	3	For mounting the power supply cord, remote controller cord and transmission cord.
Wood screw (ϕ4 x 20) 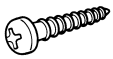	4	For mounting the network convertor.

■ DIMENSIONS

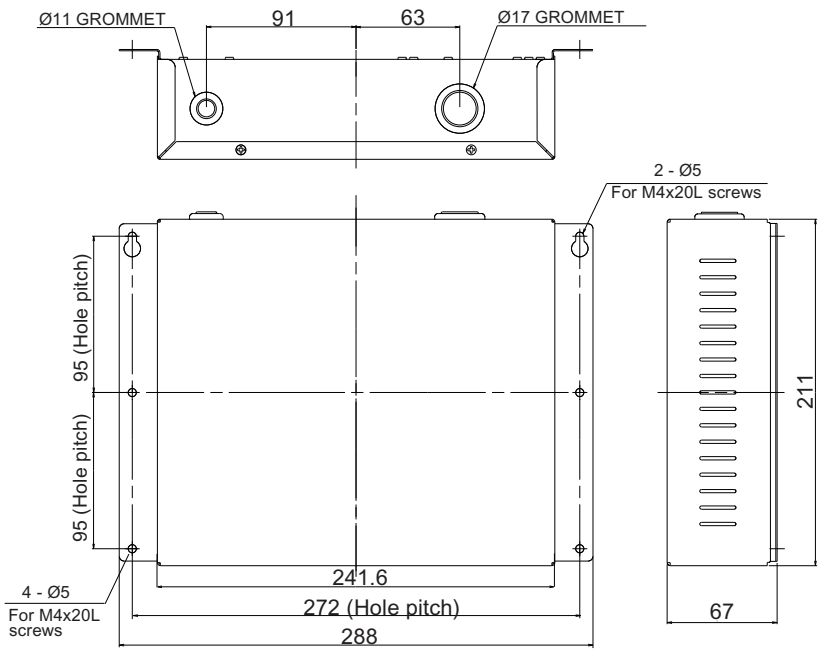

■ WIRING SPECIFICATIONS

Use	Size		Wire type	Remarks
Power supply cable (mm^2)	Maximum	1.25	H07RN-F or equivalent	Single phese wire 50Hz 220-240V * 2 wire + Ground
	Minimum	0.5		
Transmission cable (mm^2)	0.33 (22 AWG)		Shielded Level 4	Non-polar, Twisted pair, Solid core
Remote controller cable (mm^2)	0.33 (22 AWG)		Shielded cable	Polar 3-core
Fuse capacity (A)	3			

*Always ground the unit.

5-3-2. NETWORK CONVERTOR FOR LONWORKS®

Model : UTR - YLLA

■ FEATURES

The convertor for connecting VRF network to the system built by LONWORKS® open network, for manage of small to medium-sized BMS and VRF network system.

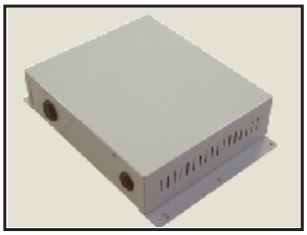

* Up to 128 indoor units can be connected to one Network Convertor.
* By using UTR-YLLA , VRF system can be centrally controlled or monitored from BMS which has LONWORKS® interface.

■ SYSTEM OUTLINE

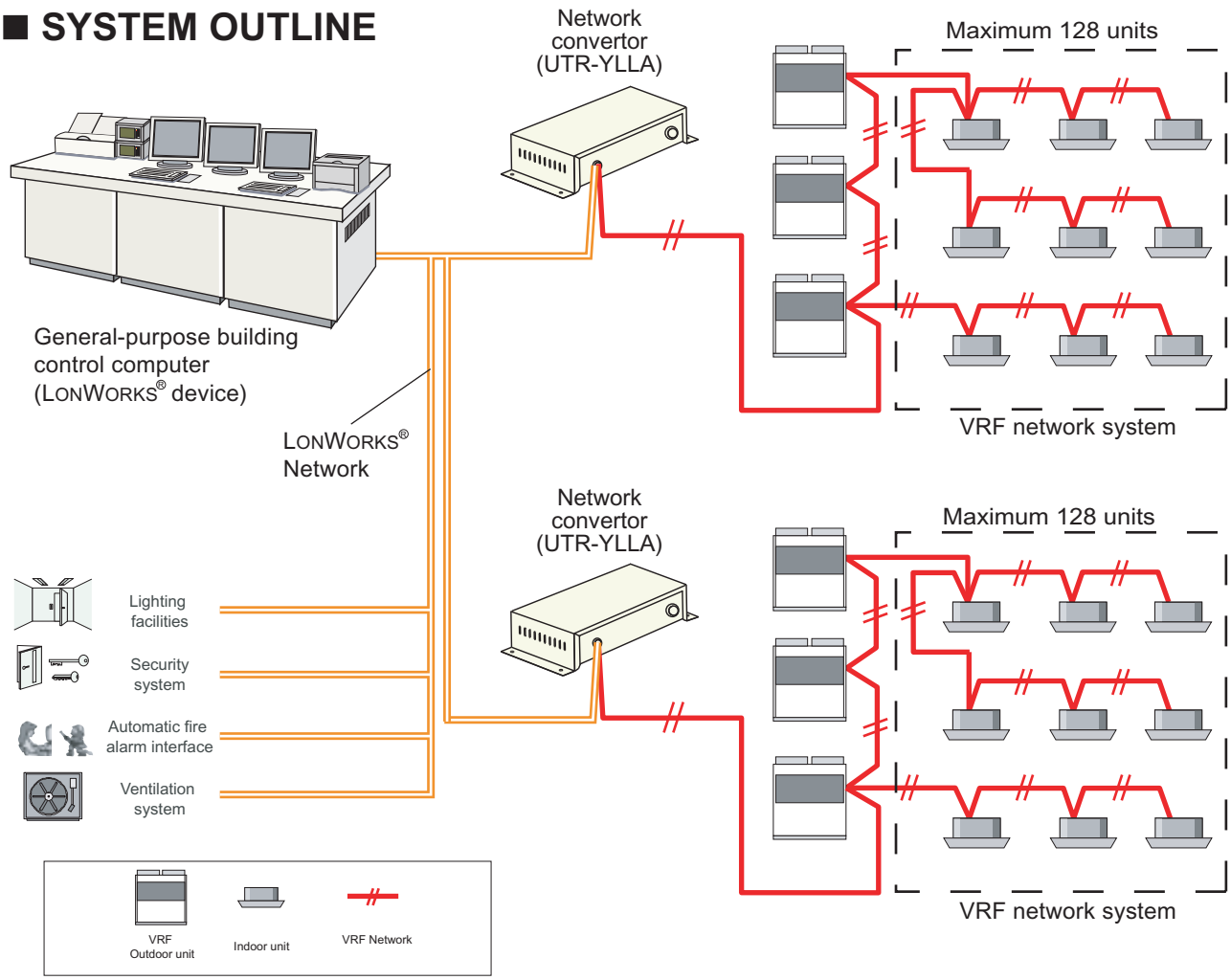

■ FUNCTIONS (Example)

Control
(LONWORKS® Network → VRF Network)

* Operation (ON / OFF)
* Operation Mode Setting
* Temperature Setting
* Fan Speed Setting
* R.C.prohibition
  (Lock the remote controller functions)

Monitor infomation
(LONWORKS® Network ← VRF Network)

* Operation Condition (ON / OFF)
* Operation Mode
* Set Temperature
* Fan Speed
* Error Display
* Central Control Display
  (Lock the remote controller functions)

CONTROL SYSTEM

■ SPECIFICATIONS

● Main specifications

Power supply	50-60Hz 220-240V
Power consumption (W)	4.5
Size (H X W X D) (mm)	67 X 288 X 211
Weight (g)	1500

● Transmission specifications

BMS SIDE	
Transmission speed	78kbps
Transceiver	FTT-10A
Transmission way form	Free topology
Termined resistor	None (It attaches at the terminal of a network.)

■ PACKING LIST

Name/Illustration	Qty.	Application
Network convertor 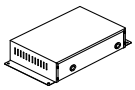	1	
Binder (Push Mount) 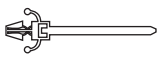	3	For mounting the power supply cord, and transmission cord.
Wood screw (ϕ4 x20) 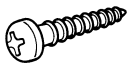	4	For mounting the network convertor.

Name/Illustration	Qty.	Application
CD-ROM	1	For initial setting.
Connector cable 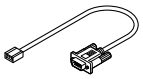	1	For initial setting.

■ DIMENSIONS

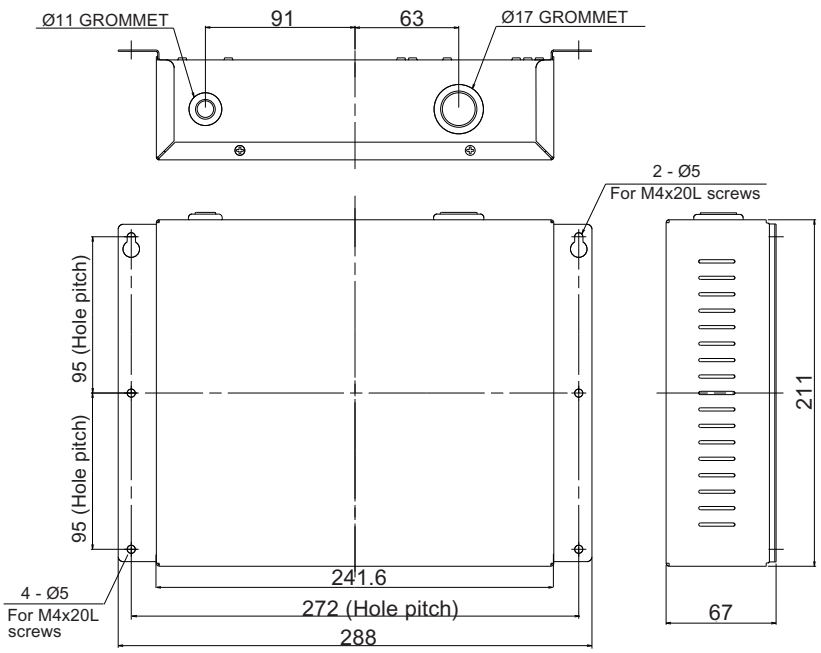

CONTROL SYSTEM

■ ELECTRICAL WIRING

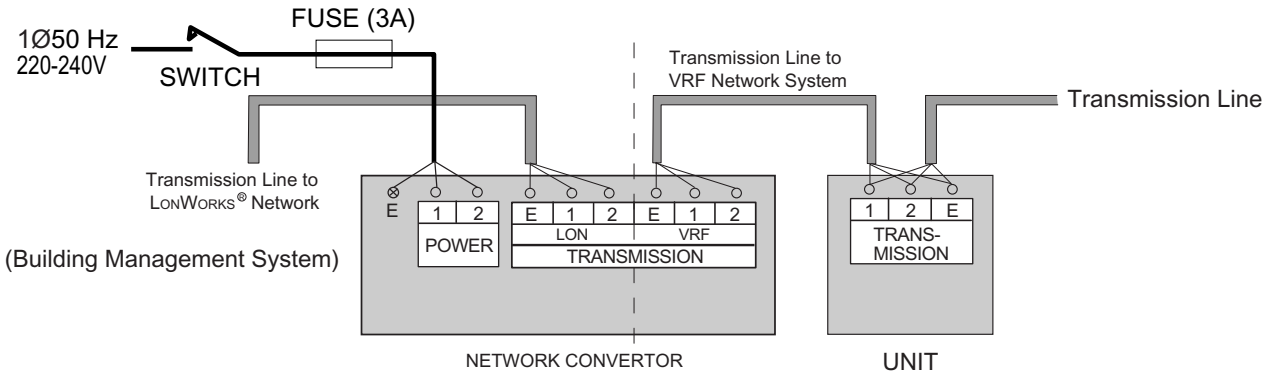

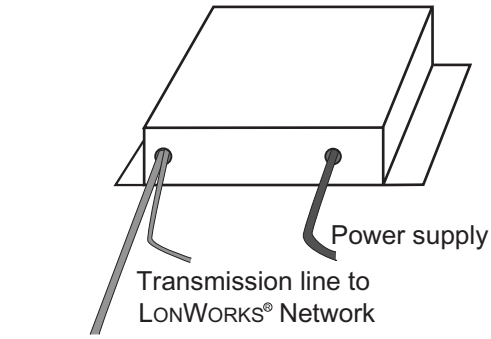

*Do not bind the power cable and remote controller cable to avoid an erroneous operation.

**Use shield cable for transmission line. The shield metal should be grounded.

***Use ground wire to ground the network convertor.

CONTROL SYSTEM

■ WIRING SPECIFICATIONS

Use	Size		Wire type	Remarks
Power supply cable (mm^2)	Maximum	1.25	H07RN-F or equivalent	Single phase 50Hz 220-240V * 2 wire + Ground
	Minimum	0.5		
Transmission cable (mm^2)	0.33 (22 AWG)		Shielded Level 4	Non-polar,Twisted pair, Solid core
Fuse capacity (A)	3			

*Always ground the unit.

5-3-3. BACnet® GATEWAY Software

Model : UTR - YLBA

■ FEATURES

The central control of maximum 1600 indoor units can be realized by connecting the VRF network system to the BACnet®, a global standard for open networks.

* ANSI / ASHRAE Standards®135-2001 BACnet® Application Specific Controller (B-ASC)
  BACnet® / IP over Ethernet
* BACnet® gateway run on Micrsoft® Windows® 2000 Professional / XP Professional.
* It can be connected up to 4 systems (400 indoor units / 100 outdoor units for 1 system) per gateway.
  It can be corresponded to large-scale buildings and hotels etc.

■ SYSTEM OUTLINE

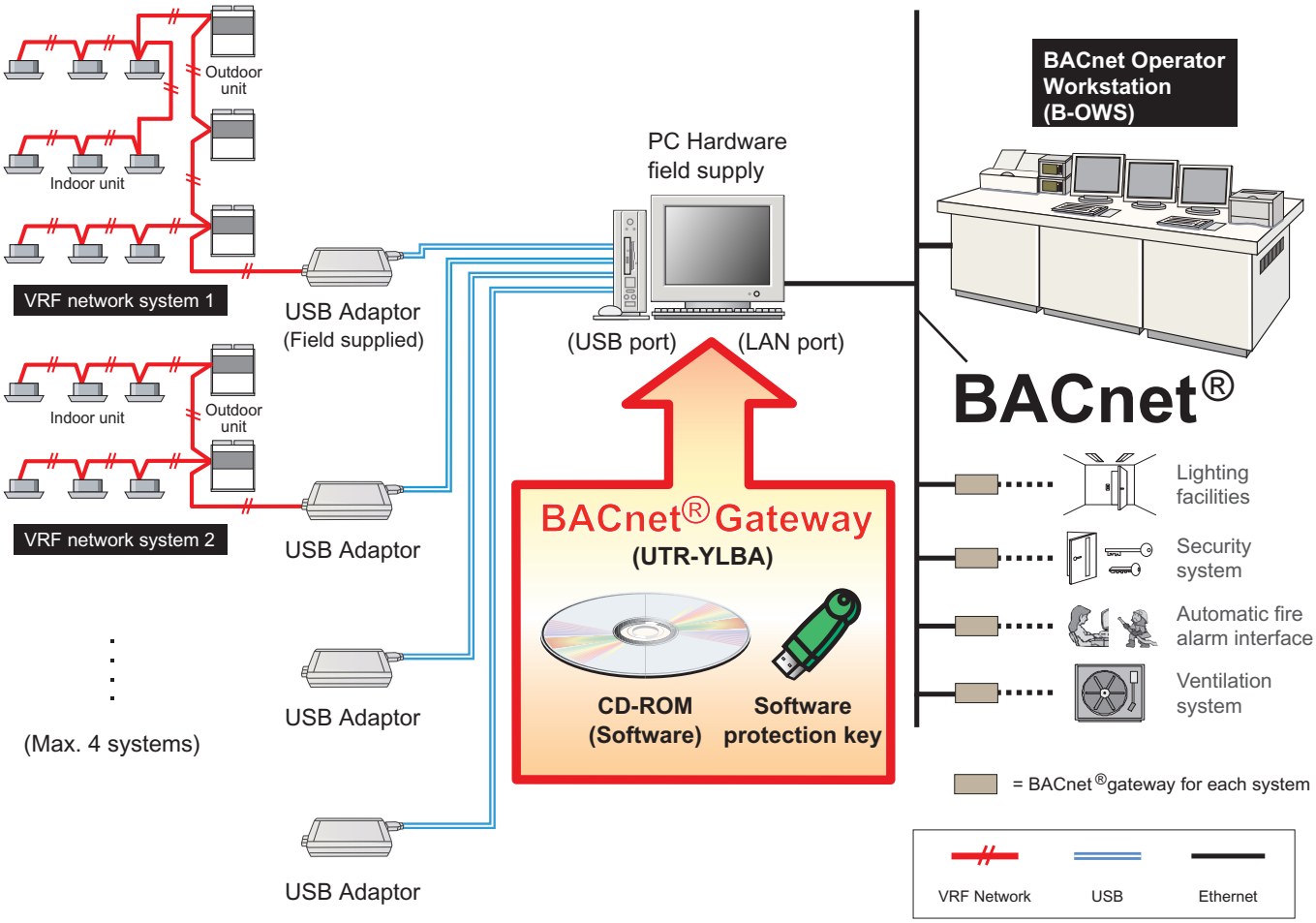

■ FUNCTIONS (Example)

Control (BMS Network→VRF Network)

* Operation (ON / OFF)
* Operation Mode Setting
* Temperature Setting
* Fan Speed Setting
* R.C. prohibition Setting
  (Lock the remote controller functions)

Monitor infomation (BMS Network←VRF Network)

* Operation Condition (ON / OFF)
* Operation Mode
* Set Temperature
* Fan Speed
* Error Display
* Central Control Display
  (Lock the remote controller functions)

CONTROL SYSTEM

■ PACKING LIST

・ CD-ROM	
・ Software Protection key	

※Personal Computer, USB adaptor and Lan cable must be procured at the site.

■ PERSONAL COMPUTER SPECIFICATIONS

	BACnet® Gateway (UTR-YLBA)
CPU	AT compatible machine that runs on Microsoft® Windows® Pentium Ⅲ 400MHz or higher
Memory	256MB or more
Display	1024 X 768 dots or more
Interface	LAN (10BASE-T / 100BASE-TX) USB 1.1 *The power supply of 100mA / 5VDC is necessary for one USB adaptor.
Operating System	Microsoft® Windows® 2000 Professional (English language version) Service Pack 3 or later Microsoft® Windows® XP Professional (English language version) Service Pack 1 or later (Microsoft® Windows® Vista® cannot be used for this product)
Required Hardware	Personal Computer (Field supplied) USB Adaptor (DH electronics XLON® USB USB4-WM-FTT) (Field supplied) * 1 adaptor is necessary for 1 VRF system.
Required Software	Adobe® Acrobat® reader 4.0 or later

■ USB ADAPTOR SPECIFICATIONS

Product Name	XLON® USB
Bus interface	USB conform, in accordance with Universal Serial Bus specification 1.1, 12 Mbit / s.
Network connection FTT-10A	2-conductor Weidmueller connector, type BL3.5 / 2FSNOR (Weidmueller ordering number 160 664)
Power supply (Via the USB)	5VDC, ± 5%, 100mA typical
Temperature	0 to +70°C (Operating) , -45 to +85°C (Non-operating)
Maximum humidity	90% R.H. @ +50°C; Non-condensing
Dimensions	123 mm x 68 mm x 30 mm (length x width x height)
Weight	100 g

Note : XLON® USB is the product of DH Electronics.
For more information, Please contact our sales representative.

CONTROL SYSTEM

5-3-4. SIGNAL AMPLIFIER

Model : UTR - YRPC

If the total length of transmission line exceeds 500m, or the number of units exceeds 64 units, Signal Amplifier will be necessary to use.

■ FEATURES

To prevent the drop of signal level by taking distance of length or quantity of unit in VRF network with installing signal amplifier, signal level can be recovered.

✻ By using this unit, it can connect the following number of each units,

(1) Transmission Line : Max. 2000m
(2) Connectable Units : Max. Indoor Unit : 400 units
Outdoor Unit : 100 units
Central Remote Controller : 16 units
Signal Amplifier : 8 units

* Standard can connect up to 500m of transmission line and 64 units of connecting units.

■ SYSTEM OUTLINE

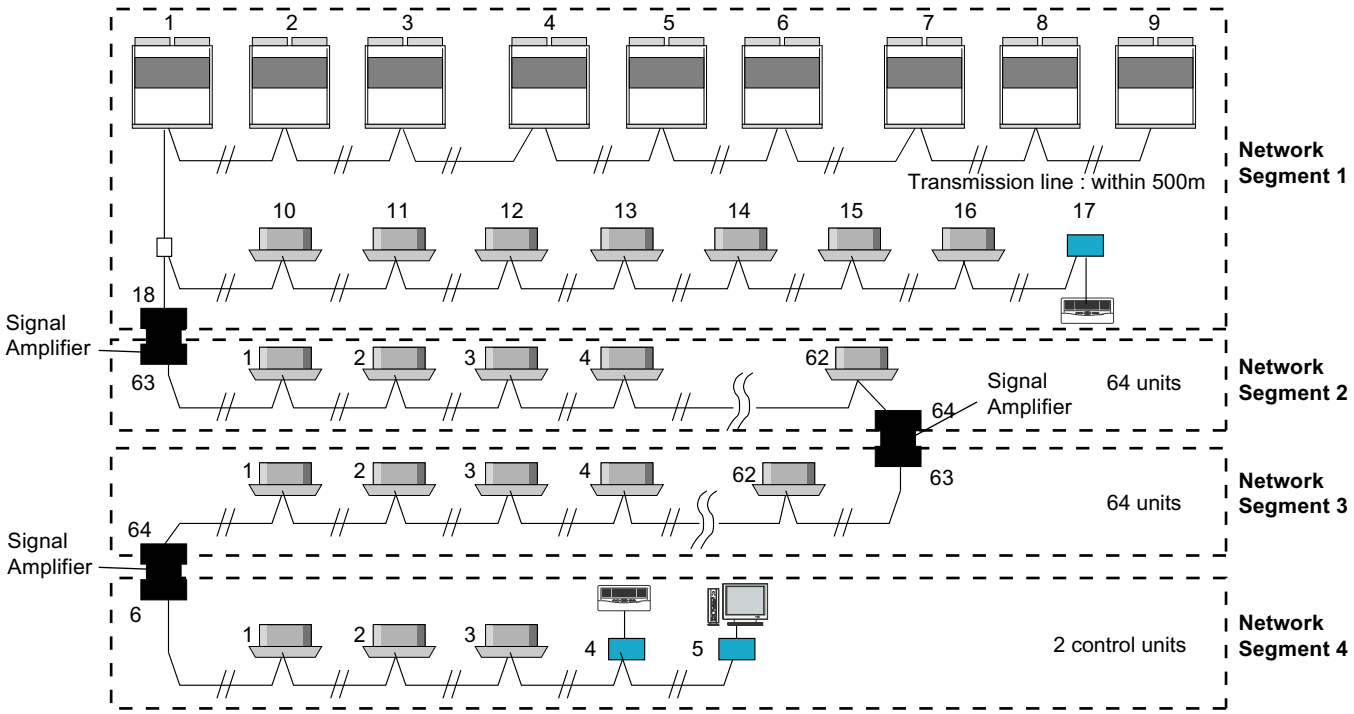

Each network segment must be within

✻ Total wiring length of transmission line : 500m

✻ A number of units : 64

✻ The number of total control unit [Central remote controller, PC controller and Network convertor (UTR-YLLA)] : Max 2

✻ The number of terminal resistor : 1

Note:

1) 22AWG Level 4 cable with shielded(National Electrical Manufacturers Association (NEMA))
differs from the Category 4 specification proposed by the Electronic Industries Association/ Telecommunication Industry Association (EIA/TIA)

2) Unit means indoor unit, outdoor unit, signal amplifier, central remote controller, PC controller and so on.

CONTROL SYSTEM

■ SPECIFICATIONS

● Main specification

POWER SUPPLY	50-60Hz 220-240V
POWER CONSUMPTION (W)	4.5
SIZE (H X W X D) (mm)	67 X 288 X 211
WEIGHT (g)	1500

■ PACKING LIST

The following installation parts are supplied. Use them as required.

Name/Illustration	Qty.	Application
Signal amplifier 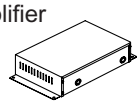	1	
Binder (Push Mount)	3	For mounting the power supply cord, and transmission cord.

Name/Illustration	Qty.	Application
Wood screw (ϕ4 x 20) 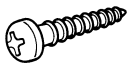	4	For mounting the signal amplifier.
Terminal resistor	1	

■ DIMENSIONS

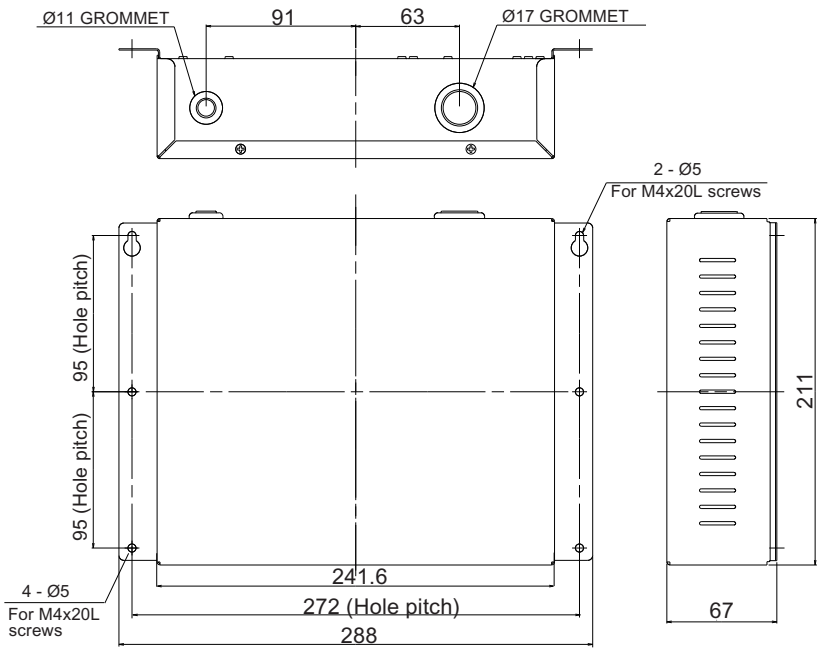

■ ELECTRICAL WIRING

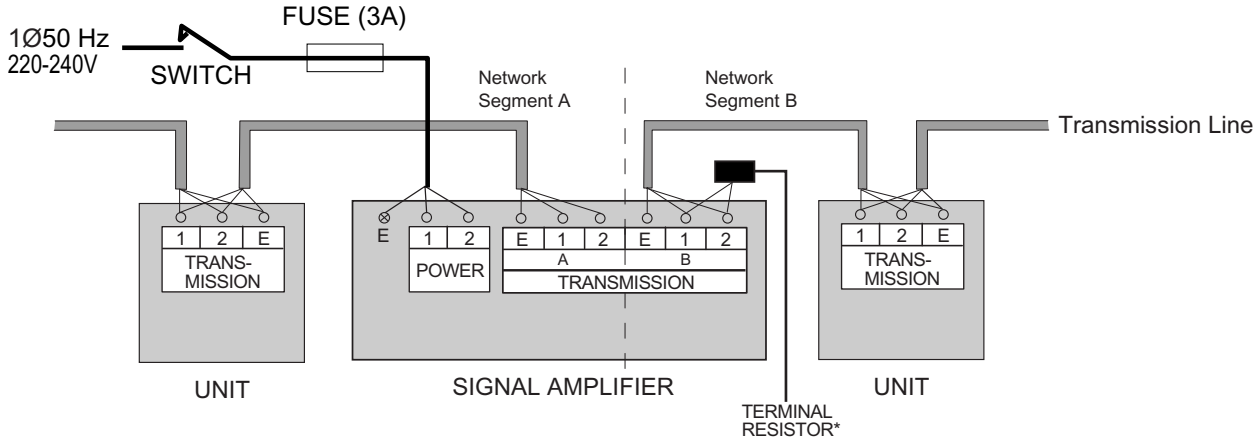

* Make sure to install 1peace of terminal resistor to each network segment.
Terminal resister is provided for each outdoor unit, but please confirm that there is only one terminal resistor in the same network segment.

5-3-5. TRANSMISSION ADAPTOR

Model : UTR - YTMA

■ FEATURES

- ✳ For air conditioning of the medium and large size buildings, the control software can control and monitor air conditioners together with the ones in the other buildings.
- ✳ This device enables control by other equipment via an Interlink cable or connection cable.
- ✳ Up to 400 Indoor units / 100 Outdoor units can be connected to one Transmission Adaptor

■ SYSTEM EXAMPLE

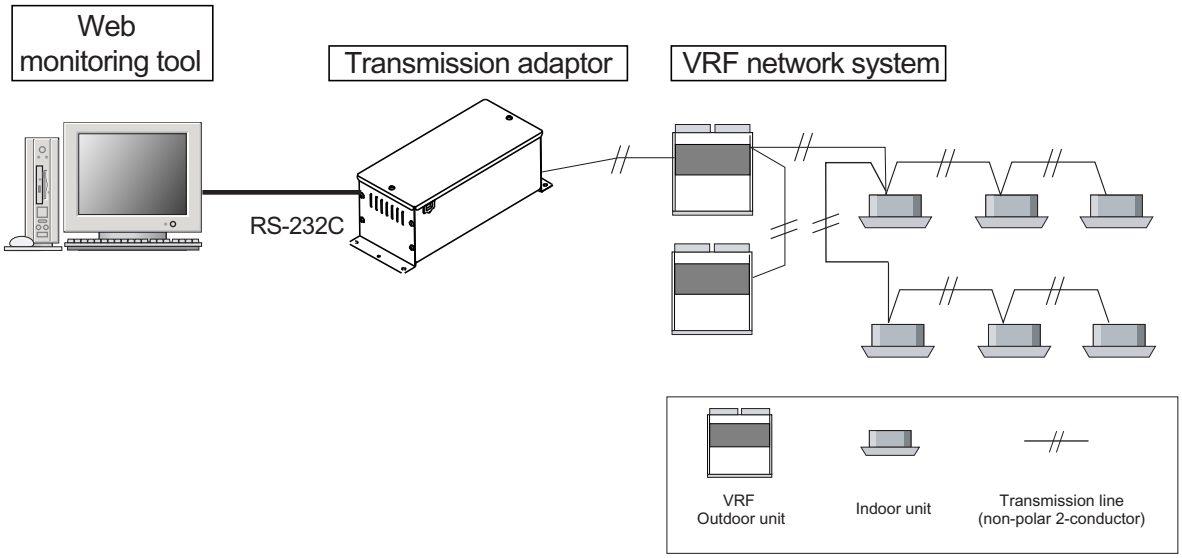

■ SPECIFICATIONS

Power supply	50-60Hz 220-240V
Power consumption	2.9W
Fuse capacity	3A
Size (H x W x D) (mm)	100 x 288 x 107
Weight (g)	1300

■ PACKING LIST

The following installation parts are supplied. Use them as required.

Name and Shape	Q'ty	Application
Transmission adaptor 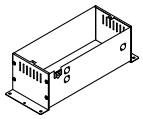	1	The equipment for transmitting data between BMS and Indoor/ Outdoor Unit.
Binder (Push Mount) 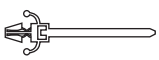	2	For mounting the power supply cord and transmission cord.
Wood Screw (ϕ4 x 20) 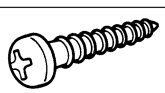	4	For mounting the transmission adaptor.

Name and Shape	Q'ty	Application
Bushing	3	For ϕ16 knockout holes. Use for the knockout holes.
Cover 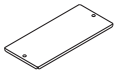	1	Transmission adaptor cover
Tapping Screw (ϕ4 x 6)	2	For mounting the transmission adaptor cover.
Tooth washer	2	For mounting the transmission adaptor cover.

CONTROL SYSTEM

● Purchased separately

RS-232C 9Pin cable is required when connecting between Building Management System (BMS) and transmission adaptor.
Please use the following cable to order from your sales representative.

Parts shape	Q'ty	Application
Interlink cable RS-232C 9Pin 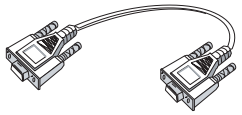 (D-Sub 9Pin female connector-D-Sub 9Pin female connector)	1	For connecting between BMS and transmission adaptor. Refer to the following connection diagram.

● Connection diagram

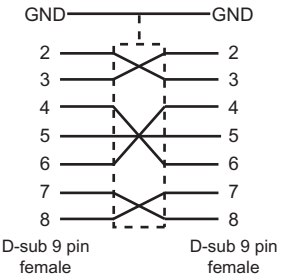

■ DIMENSIONS

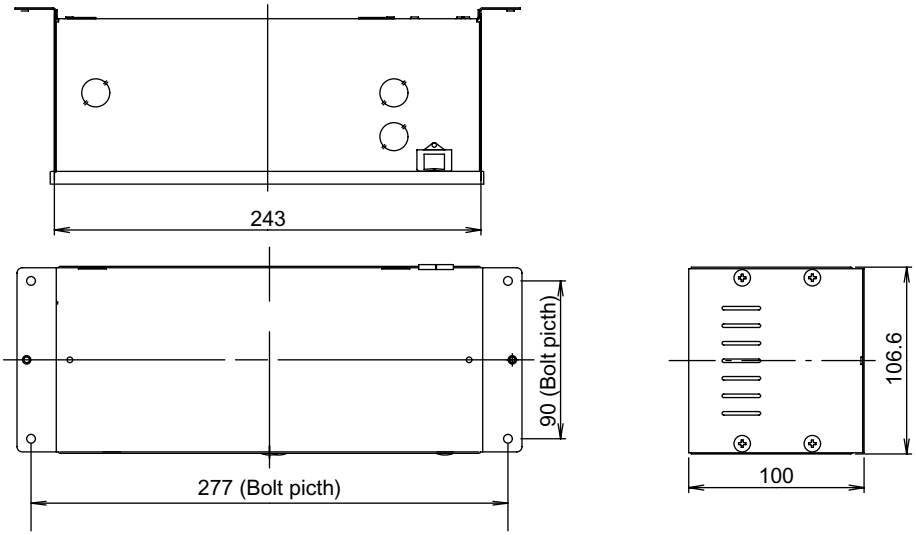

■ ELECTRICAL WIRING

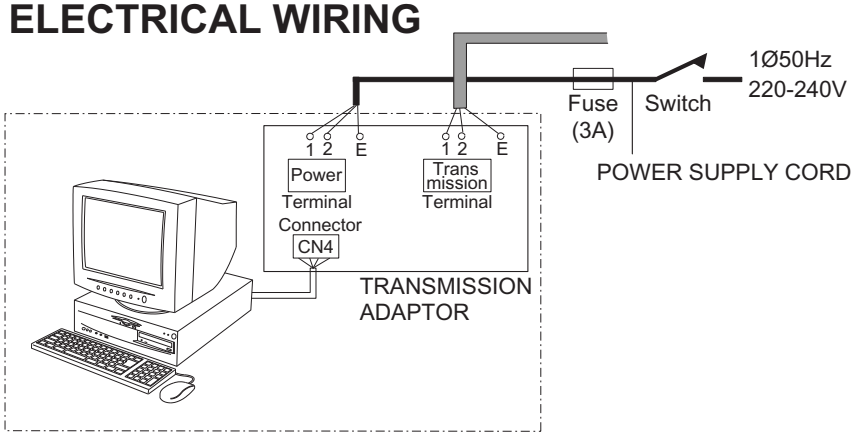

■ WIRING SPECIFICATIONS

Use	Size		Wire type	Remarks
Power supply cable (mm²)	Maximum	1.25	H07RN-F or equivalent	Single phase 50Hz 220-240V * 2 wire + Ground
	Minimum	0.5		
Transmission cable (mm²)	0.33		shielded Level 4 22AWG (0.65mm)	Non-polar,One twisted pair, Solid core diameter 0.65mm
Fuse capacity (A)	3			

*Always ground the unit.

CONTROL SYSTEM

5-3-6. EXTERNAL SWITCH CONTROLLER

Model : UTR - YESA

■ FEATURES

- Air conditioner switching can be controlled by connecting other sensor switches.
- ON/OFF, Temperature, Fan speed and Operating mode can be switched by a combination with Card-key switch equipped in facilities such as hotel room.

※ Card-key or other sensor switches are available as a field supplied parts.

■ SYSTEM DIAGRAM

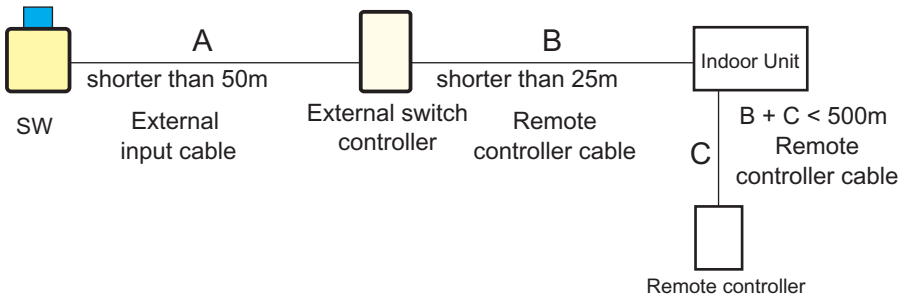

■ SPECIFICATIONS

Power supply	DC 12V
Size (H x W x D) (mm)	120 x 75 x 30
Weight (g)	90

■ PACKING LIST

Name	Quantity	Application
External switch controller	1	
Tapping screw(M4x16mm)	2	For installing the external switch controller
Binder	5	For external switch controller and cable binding

■ DIMENSIONS

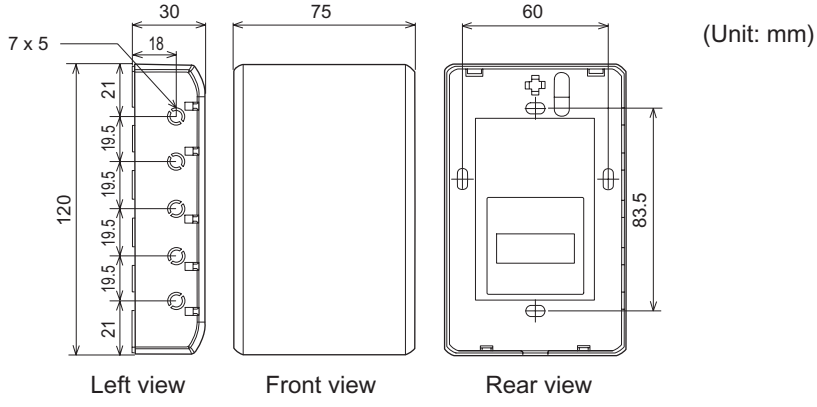

(Unit: mm)

CONTROL SYSTEM

■ ELECTRICAL WIRING

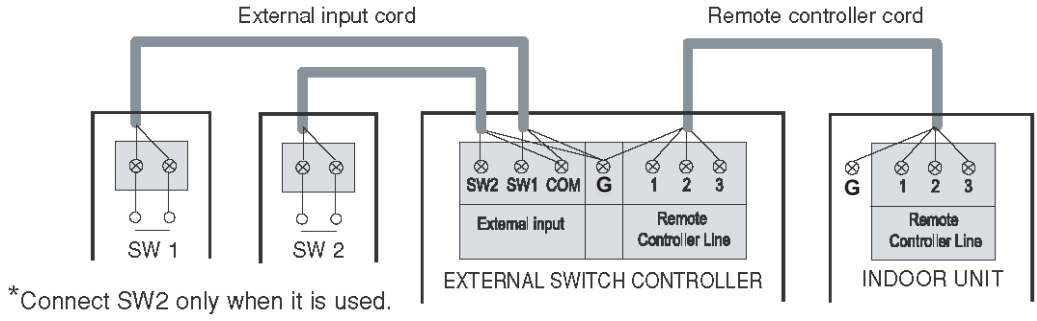

*Connect SW2 only when it is used.

Connection to external contacts

Non voltage

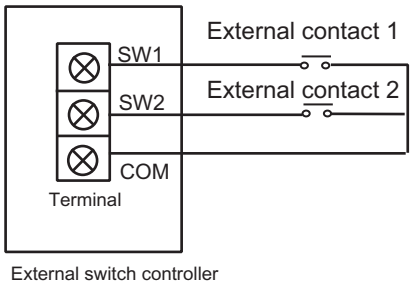

Open circuit voltage : 12 (V) ± 2 (V).
Short circuit current : ≦ 2 (mA).
Short circuit detection resistance (R_{ON}) : ≦ 1 (kilo-ohm).
Open circuit detection resistance (R_{OFF}) : ≧ 50 (kilo-ohm).

■ WIRING SPECIFICATIONS

Use	Size	Wire type	Remarks
Remote controller cable (mm^2)	0.33 (22AWG)	Shielded	Polar 3 core Twisted pair
External input cable (mm^2)	0.33 (22AWG)	Shielded	Polar 2 core Twisted pair

CONTROL SYSTEM

■ EXAMPLE

Application	Setting	Wiring	Operation example
When controlling the individual operation states with two external contact	MODE0 P1: Arbitrary operation state Contact OFF⇒ ON P2: Arbitrary operation state Contact OFF ⇒ ON Others setting are arbitrary.	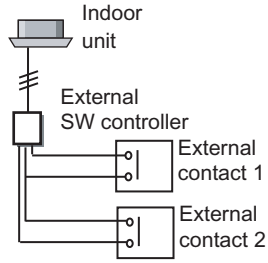	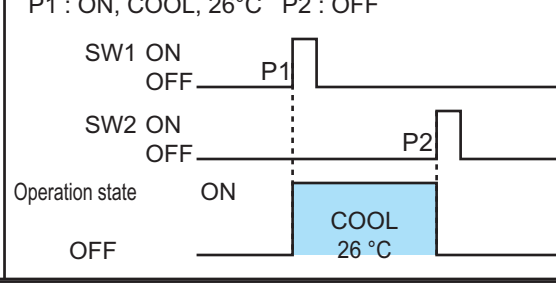

■ EXAMPLE

Application	Setting	Wiring	Operation example
When controlling operation by ON or OFF of an external contact switch	MODE1 P1 : Arbitrary operation state P2 : Arbitrary operation state Others setting are arbitrary.	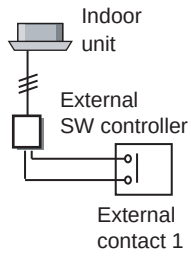	P1 : OFF P2 : ON, COOL, 26°C 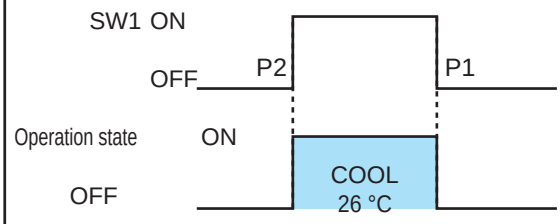
When operating in the state set when an external contact switch was set to ON and returning to the original operation state when the switch was set to OFF	MODE1 or 0 P1 : SETBACK P2 : Arbitrary operation state Others setting are arbitrary.	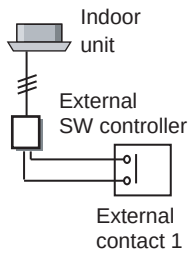	MODE1, P1 : SETBACK P2 : ON, COOL, 26°C 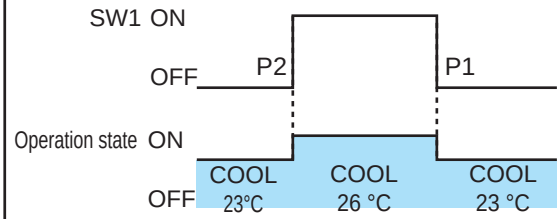
When operated in the state when an external contact switch was set to OFF and returned to original operation state	MODE1 or 0 P1 : Arbitrary operation state P2 : SETBACK Others setting are arbitrary.	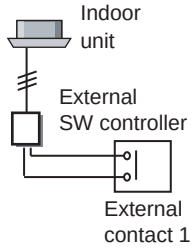	MODE1, P1 : ON, COOL, 26°C P2 : When SETBACK 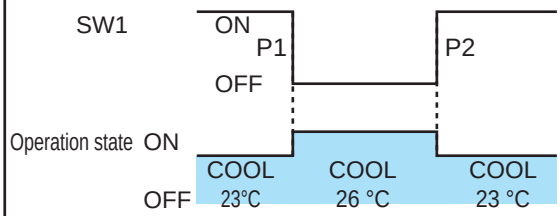
When a temperature sensor switch is connected and cooling and heating switching is performed.	MODE2 P1 : ON, COOL or HEAT P2 : ON, COOL or HEAT Operation conditions :Unit operationg only Others setting are arbitrary.	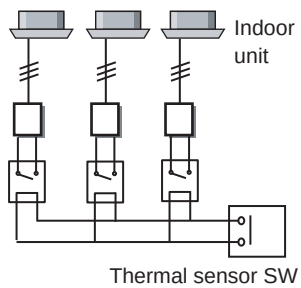 An external switch controller is connected to all the indoor units of the same refrigerant system and cooling and heating are switched by one temperature sensor.	P1 : ON, COOL, 26°C P2 : ON,HEAT, 21°C 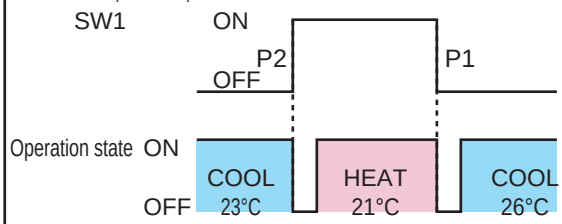
When preventing chattering noise within 1 minute of the external contact switch.	MODE1 Delay-time setting :Delay P1 : Arbitrary operation state P2 : Arbitrary operation state Others setting are arbitrary.	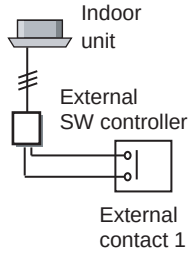	P1 : OFF P2 : ON, COOL, 26 °C 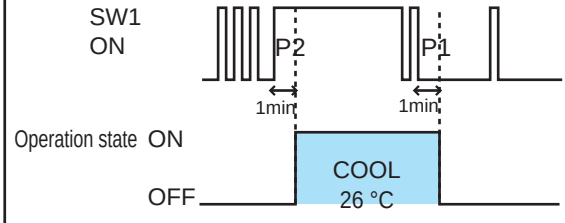

CONTROL SYSTEM

CONTROL SYSTEM

5-4.SERVICE & WEB MONITORING TOOL Software

5-4-1.SERVICE TOOL

Model : UTR-YSTC

Extensive monitoring and analysis functions for installation and maintenance.
Operation status and error history can be grasped promptly and adequately.

■ FEATURES

- Adopting to USB type network interface to convert VRF network, it realizes highly portability and simple connection.
- Storage of data on system operating status on a PC allows access even from off site.
- Up to 400 units can be controlled and monitored for large scale building or hotels.
- Operational status can be checked and analyzed to detect even the small abnormalities.
- The operational status and various sensor information of each unit can be monitored real time and can be understood in detail as history information.
- By realizing operation control to each unit from PC, the operational status in various condition and system requirements can be grasped.
- The Y axis of old fixed data graph screens can be specified within an arbitrary range at a setup modification screen.
- This allows verification of even minute changes of each value.

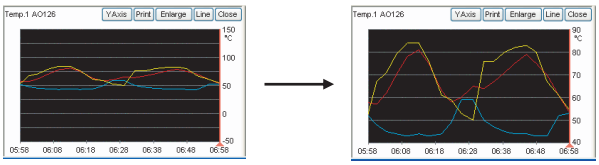

Preserving the operational status record at arbitrarily term evenwhile current data sampling continuously.

CONTROL SYSTEM

CONTROL SYSTEM

● COMMISSIONING TOOL

Test run commands can be executed with this tool.
During test running, the outdoor unit / indoor unit sensor data can be saved (commissioning log data).
After the end of test running, this data can be exported in CSV file format.

■ SYSTEM OUTLINE

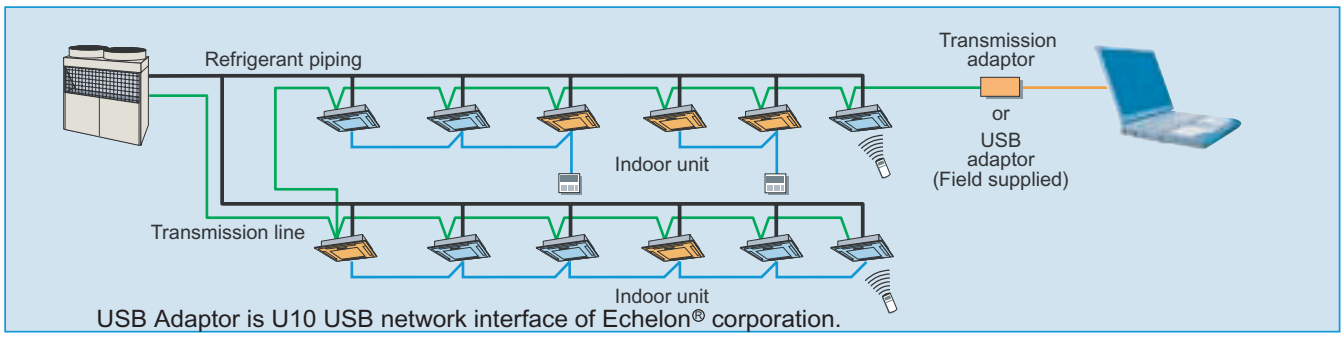

USB Adaptor is U10 USB network interface of Echelon® corporation.

● SYSTEM COMPONENTS

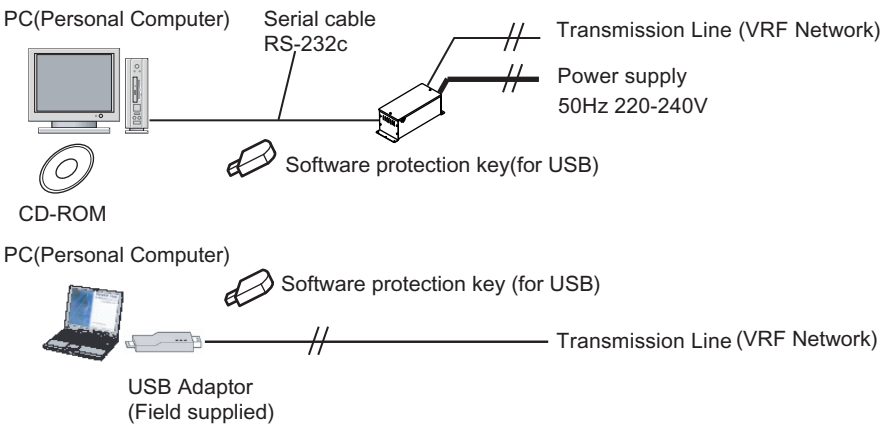

■ MAIN FUNCTIONS

① System List

Displays the overall operational status from a list of the status of each unit.

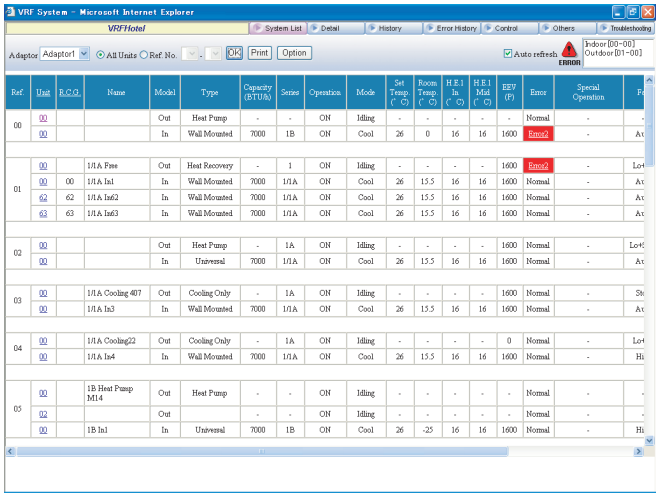

② Equipment Detail (Diagram)

Displays the detail information for sensor values, electrical components etc. for the specified units in schematic.

The information here can be used along with the detail information in list form, to check the operation status of units and make detail analysis on the cause, in case an error occurs.

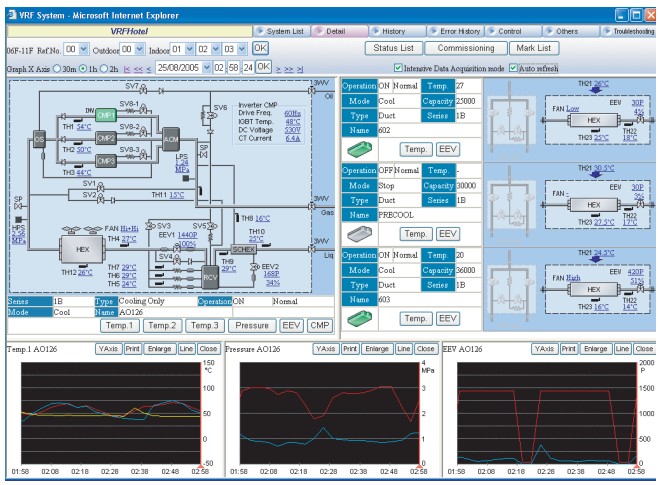

③ Equipment Detail (List)

Displays the detail information for sensor values, electrical components etc. of units in a specified refrigerant system in list form.

The information here can be used along with the detail information in diagram form, to check the operation status of units and make detail analysis on the cause, in case an error occurs.

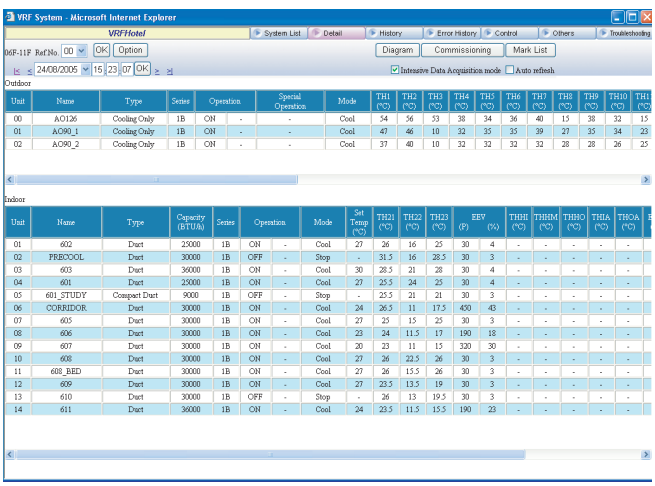

CONTROL SYSTEM

④ Operation History

The indoor units or outdoor unit operation history can be recorded.

The displayed operation history can be printed out and saved to a CSV file.

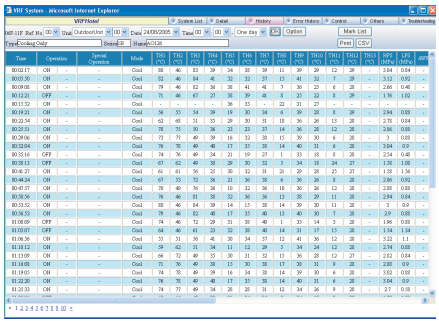

⑤ Error History

Displays the error information for each unit. The error information can sequentially be displayed up to 50 items as they occur starting with the latest error.

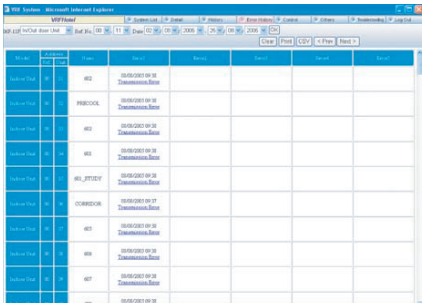

⑥ Remote File Download

Operation and error history data can be downloaded.

Only the required data may be downloaded specifying the refrigerant system, unit and time range.

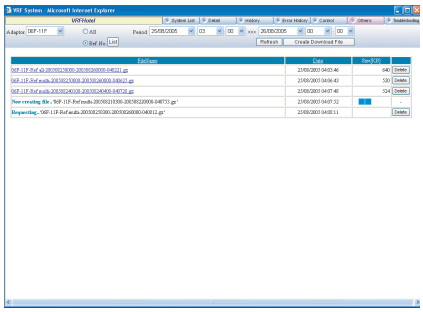

CONTROL SYSTEM

■ PACKING LIST

· CD-ROM	
· Software protection key	

■ PERSONAL COMPUTER SPECIFICATIONS

The following equipment is required for using Service tool AT compatible machine that runs on Microsoft® Windows®.

Personal Computer	Operating System	AT compatible machine that runs Microsoft® Windows® Microsoft® Windows® 2000 Professional (English version / Service pack3 or later) Microsoft® Windows® XP Professional (English version / Service pack1 or later) (Microsoft®Windows® Vista®cannot be used for this product)
	CPU	Intel® Pentium® / Celeron®, AMD Athlon™ / Duron™ 1GHz or higher
	HDD	2.1 GB or more
	Memory	256 MB or more
	Interface	• Serial port (for UTR-YTMA) • USB port(for U10 USB Network Interface, Software protection key)
Software		Internet Explorer 6.0 or later / Adobe® Acrobat® Reader 4.0 or later
Hardware		Interlink cable D-sub 9Pin [Field supplied] / Transmission Adaptor (UTR-YTMA) or U10 USB Network Interface (Echelon Corporation)

CONTROL SYSTEM

■ USB ADAPTOR SPECIFICATIONS

Product name		U10 USB Network Interface TP/FT-10 Channel (Echelon model name 75010)
Network connector		Removable spring clamp clamp and screw terminal connectors included
Operating input current (USB)		50mA (maximum) @ 5VDC
USB compatibility		Certified USB 2.0 compatible. Compatible with USB 1.1 and Hi-speed USB systems, peripherals and cables.
LED indicators		Service (amber), Transmit (Green), Receive (Green)
Temperature		0 to +70°C (Operating), -20 to +85°C (Non-operating)
Humidity	Operating	25 to 90% R.H. @ +50°C; Non-condensing
	Non-operating	95% R.H. @ +70°C; Non-condensing
Dimensions		113.2 mm x 22.4 mm x 18.2 mm (length x width x height)
Weight		30 g

Note : Make sure that USB equipment (USB hub, etc.) which this adaptor is connected to, is not overloaded. (Total power supplied from PC should not exceed the maximum limit).
For more information, please contact our sales representative.

5-4-2. WEB MONITORING TOOL Software

Model : UTR-YMSA

■ FEATURES

- ✳ Troubleshooting is performed by monitoring each air conditioning unit remotely during periodical system checks.
- ✳ Error notification can be automatically transmitted to several locations using the internet *1).
- ✳ Requires either a dedicated internet connection* or public telephone line.
- ✳ Determination of an error occurrence can be made through error warnings and equipment status information obtained from a remote location.
- ✳ The monitoring data in a remote side can be optionally downloaded. And, this data can be displayed in off-line mode of the service tool.

  Monitoring side computer is not required to install special software, required only general web browser.

*1) Unchanging global IP address is required.

■ SYSTEM OUTLINE

Web Monitoring System

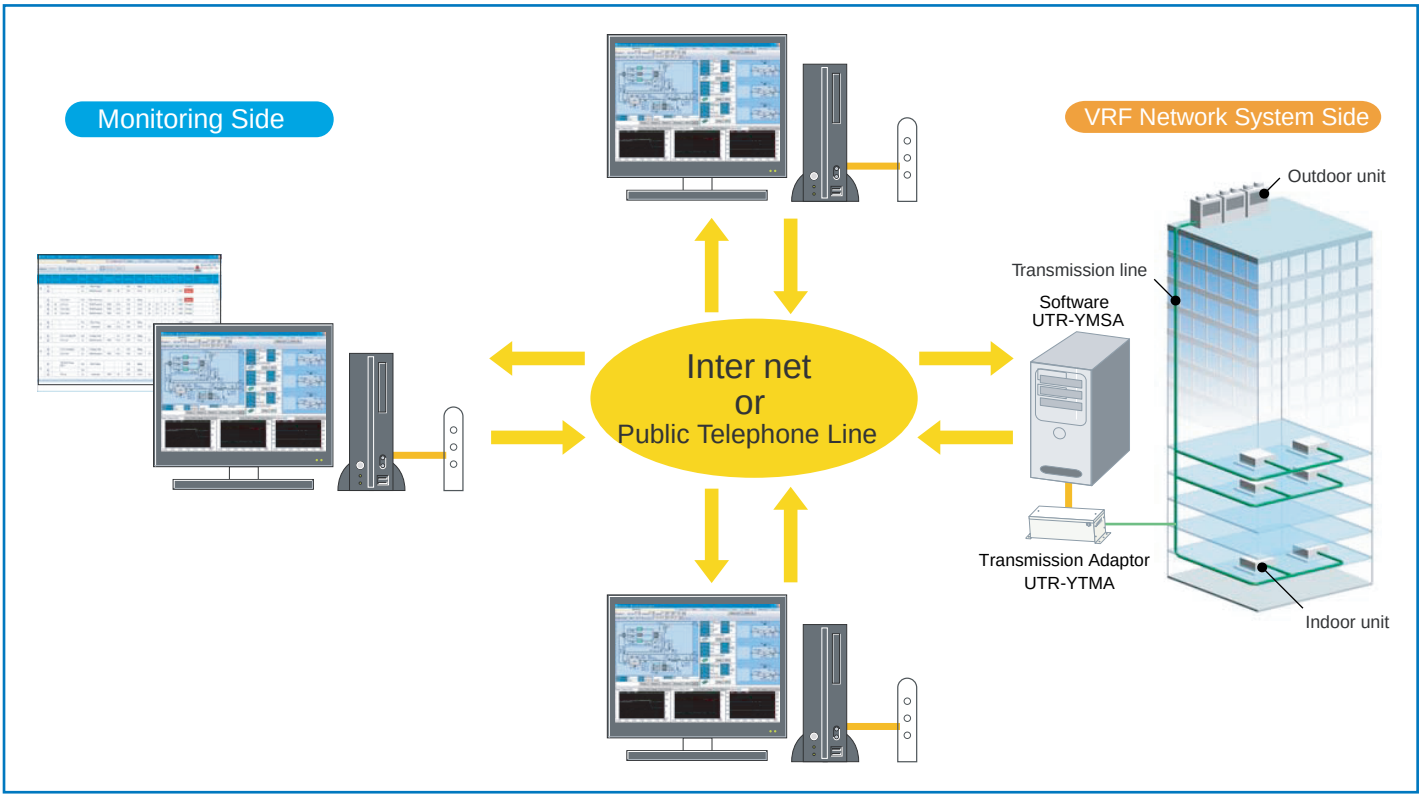

● SYSTEM COMPONENTS

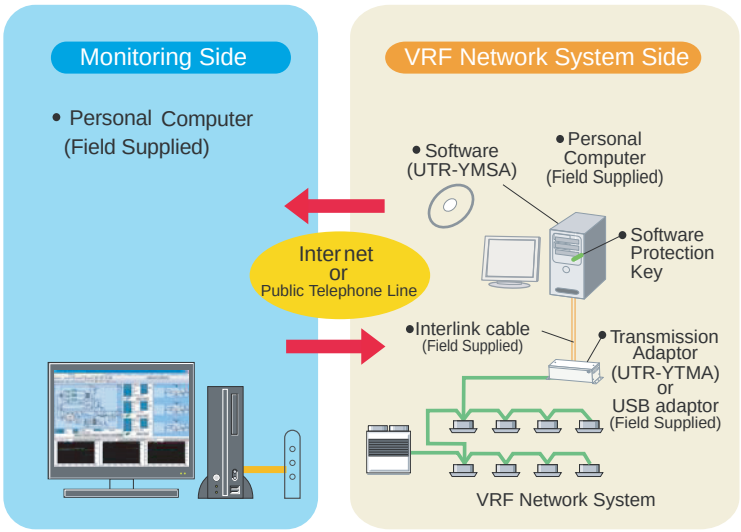

CONTROL SYSTEM

● SUPPORT 4 VRF NETWORK SYSTEMS

PC Transmission adaptors (max. four adaptors per PC) permit control and monitoring of up to 1,600 units.
Suitable for large-scale buildings or hotels.

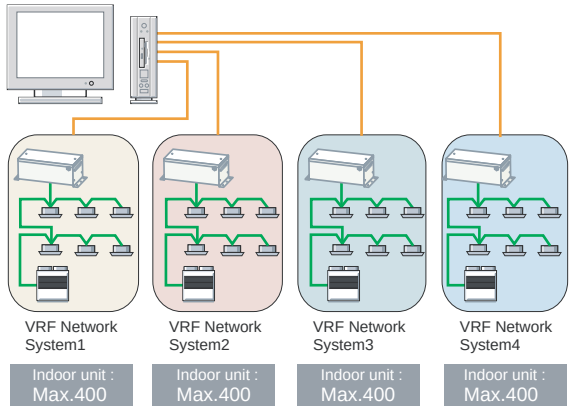

■ PACKING LIST

· CD-ROM	
· Software protection key	

CONTROL SYSTEM

■ PERSONAL COMPUTER SPECIFICATIONS

The following equipment is required for using Web Monitoring tool AT compatible machine that runs on Microsoft® Windows®.

Personal Computer		AT compatible machine that runs Microsoft® Windows®
	Operating System	Microsoft® Windows® 2000 Professional (English version / Service pack3 or later) Microsoft® Windows® XP Professional (English version / Service pack1 or later) (Microsoft®Windows® Vista®cannot be used for this product)
	CPU	Intel® Pentium® / Celeron®, AMD Athlon™/ Duron™1GHz or higher
	HDD	2.1 GB or more
	Memory	512 MB or more
	Interface	Serial port (for UTR-YTMA Max.4) USB port (for U10 USB Network Interface Max.4 , Software protection key) or U10 USB Network Interface Echelon Corporation)
Software		Internet Explorer 6.0 or later / Adobe® Acrobat® Reader 4.0 or later
Hardware		Interlink cable D-sub 9Pin [Field supplied] Transmission Adaptor (UTR-YTMA) or USB Adaptor is U10 USB Network interface of Echelon ® corporation.

■ USB ADAPTOR SPECIFICATIONS

Please refer specification in 5-4-1 SERVICE TOOL.

■ COMPARISON TABLE

No.	Item	Service Tool UTR-YSTC	Web Monitoring Tool UTR-YMSA	
			VRF Network System Side	Monitoring Side
1	Interchangeability of equipment	●	●	●
2	Indication of equipment list	●	●	●
3	Operation control	●	●	—
4	Indication of unit circuit diagram	●	●	●
5	Commissioning tool	●	●	—
6	Monitoring of equipment information	●	●	●
7	Monitoring of operating condition	●	●	●
8	Monitoring of sensor data	●	●	●
9	Indication of trend graph	●	●	●
10	Storage and CSV output of operating history (sensor data)	●	●	●
11	Printing of trend graph	●	●	●
12	Monitoring and screen display of abnormalities	●	●	●
13	E-mail automatic transmission of abnormalities	—	● ※1	—
14	Setting for user level	—	●	—

※1 It is available only during a connection to the Internet.

CONTROL SYSTEM

Refrigerant R410A
INVERTER

AIRSTAGE™
V SERIES

6 . SYSTEM DESIGN

6-1. SYSTEM DESIGN

6-1-1. REFRIGERANT SYSTEM

■ CONNECTABLE UNIT IN 1 REFRIGERANT SYSTEM

UNIT	Quantity	Remarks
Outdoor unit	Max 3units	1 Master unit is always required. Slave unit can be connected maximum 2.
Indoor unit	Max 48units	See table1

Table 1 : Maximum connectable indoor unit

HP	Capacity (kW)	Operating capacity of indoor unit (kW)	✳3 Maximum connectable indoor unit	Indoor unit connectable capacity (kW)	
8	22.4	2.20 to 33.6	15	11.2 to 33.6	✳1 ✳2 50% to 150%
10	28.0	2.20 to 42.0	16	14.0 to 42.0	
14	40.0	2.20 to 60.0		20.0 to 60.0	
16	44.8	2.20 to 67.2	30	22.4 to 67.2	✳1 50% to 150%
18	50.4	2.20 to 75.6	32	25.2 to 75.6	
20	56.0	2.20 to 84.0		28.0 to 84.0	
22	62.4	2.20 to 93.6		31.2 to 93.6	
24	68.0	2.20 to 102		34.0 to 102	
26	72.8	2.20 to 109		36.4 to 109	
28	80.0	2.20 to 120		40.0 to 120	
30	84.0	2.20 to 126	48	42.0 to 126	
32	90.4	2.20 to 135		45.2 to 135	
34	96.0	2.20 to 144		48.0 to 144	
36	102	2.20 to 153		51.0 to 153	
38	108	2.20 to 162		54.0 to 162	
42	120	2.20 to 180		60.0 to 180	

✳1 Based on rated cooling capacity.

✳2 Indoor unit connectable capacity is 75 to 150% for single outdoor unit system (8-14HP) in case of including indoor unit model code 18 and under in the system.

✳3 Minimum connectable indoor unit number is 2.
However ARXC90 can be used single connection.

● Caution

✳ When all indoor units are operating at maximum capacity, individual indoor units operate at a slightly lower capacity. (When connecting more than 100%)
Based on the capacity table in chapter 2, select the optimum combination of outdoor units.

✳ Select so they satisfy the “Total capacity of indoor unit” even if they do not satisfy the “Max connectable indoor unit”.

✳ Do not exceed the limitation of the “Total capacity of indoor unit”, because it could hinder the return of the refrigerant oil and cause a compressor breakdown.

SYSTEM DESIGN

■ OUTDOOR UNIT COMBINATION

✳ When connecting the outdoor unit, one master unit must be included, with a maximum of two slave units. As such, a maximum of three units can be connected.

HP	Capacity (kW)	Combination		
		Master	Slave1	Slave2
8	22.4	AJ*A72LBTF	-	-
10	28.0	AJ*A90LBTF	-	-
14	40.0	AJ*126LBTF	-	-
16	44.8	AJ*A72LBTF	AJ*A72UBTF	-
18	50.4	AJ*A90LBTF	AJ*A72UBTF	-
20	56.0	AJ*A90LBTF	AJ*A90UBTF	-
22	62.4	AJ*126LBTF	AJ*A72UBTF	-
24	68.0	AJ*126LBTF	AJ*A90UBTF	-
26	72.8	AJ*A90LBTF	AJ*A72UBTF	AJ*A72UBTF
28	80.0	AJ*126LBTF	AJ*126UBTF	-
30	84.0	AJ*A90LBTF	AJ*A90UBTF	AJ*A90UBTF
32	90.4	AJ*126LBTF	AJ*A90UBTF	AJ*A72UBTF
34	96.0	AJ*126LBTF	AJ*A90UBTF	AJ*A90UBTF
36	102	AJ*126LBTF	AJ*126UBTF	AJ*A72UBTF
38	108	AJ*126LBTF	AJ*126UBTF	AJ*A90UBTF
42	120	AJ*126LBTF	AJ*126UBTF	AJ*126UBTF

✳ Selecting outdoor unit capacity in order of
Master unit ≧ Slave unit 1 ≧ Slave unit 2

SYSTEM DESIGN

■ EXAMPLE OF REFRIGERANT SYSTEM

● Single outdoor unit system

○ Example1 (System example of all the indoor units model code more than 20)

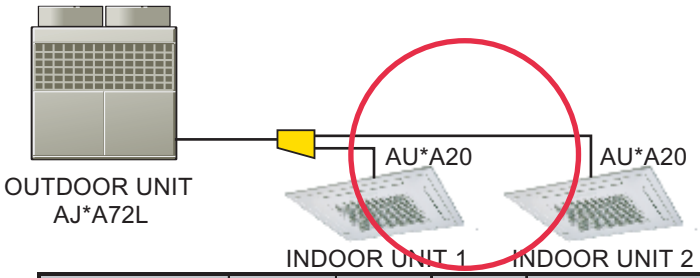

	Model	Capacity (kW)	Total capacity (kW)	Connectable indoor unit capacity		Judgement
				Min	Max	
OUTDOOR UNIT	AJ＊A72L	22.4	22.4	② **50%** **11.2kW** **＊1**	③ 150% 33.6kW	②≦①≦③ 11.2kW＜11.4kW＜33.6kW ↓ **OK**
INDOOR UNIT 1	AU＊A20	**5.7**	① 11.4			
INDOOR UNIT 2	AU＊A20	**5.7**				

＊1: In above case all connected indoor unit are not including indoor unit model code 18 and under, minimum connectable indoor unit capacity is 50% (11.2kW for AJ*A72L)

○ Example2 (System example of including indoor unit model code 18 and under)

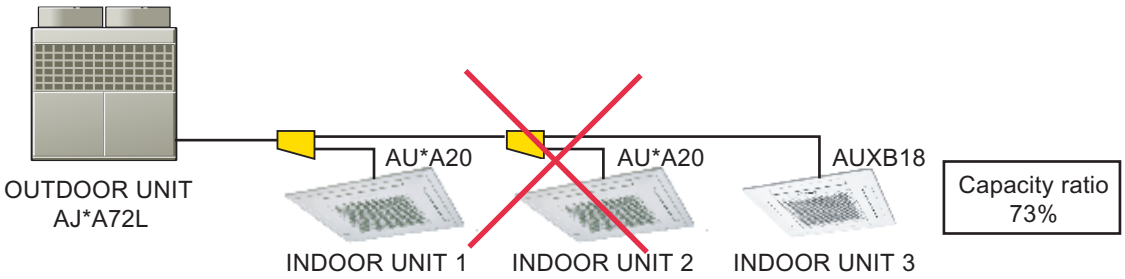

	Model	Capacity (kW)	Total capacity (kW)	Connectable indoor unit capacity		Judgement
				Min	Max	
OUTDOOR UNIT	AJ＊A72L	22.4	22.4	② **75%** **16.8kW** **＊2**	③ 150% 33.6kW	①＜②＜③ 16.4kW＜16.8kW＜33.6kW ↓ **No Good**
INDOOR UNIT 1	AU＊A20	**5.7**	① 16.4			
INDOOR UNIT 2	AU＊A20	**5.7**				
INDOOR UNIT 3	AUXB18	**5.0**				

＊2: In above case system includes indoor unit model code 18 and under, minimum connectable indoor unit capacity should be 75% (16.8kW for AJ*A72L)

○ Example3 (System example of including indoor unit model code 18 and under)

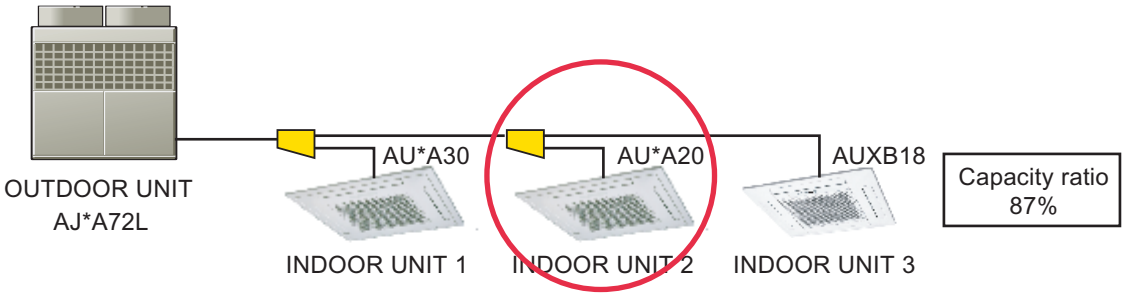

	Model	Capacity (kW)	Total capacity (kW)	Connectable indoor unit capacity		Judgement
				Min	Max	
OUTDOOR UNIT	AJ＊A72L	22.4	22.4	② **75%** **16.8kW** **＊2**	③ 150% 33.6kW	②≦①≦③ 16.8kW＜19.5kW＜33.6kW ↓ **OK**
INDOOR UNIT 1	AU＊A30	**8.8**	① 19.5			
INDOOR UNIT 2	AU＊A20	**5.7**				
INDOOR UNIT 3	AUXB18	**5.0**				

＊2: In above case system includes indoor unit model code 18 and under, minimum connectable indoor unit capacity should be 75% (16.8kW for AJ*A72L)

SYSTEM DESIGN

● Single indoor unit system

○ Example4 (System example of 1 indoor unit of ARXC90 is connected)

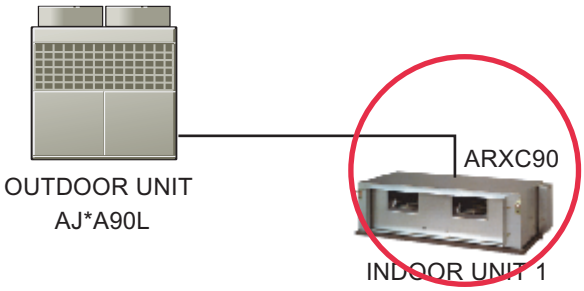

	Model	Capacity (kW)	Total capacity (kW)	Connectable indoor unit capacity		Judgement
				Min	Max	
OUTDOOR UNIT	AJ＊A90L	28.0	28.0	② **50%** **14.0kW**	③ 150% 42.0kW	②≦①≦③ 14.0kW＜25.4kW＜42.0kW ↓ **OK ＊3**
INDOOR UNIT 1	**ARXC90**	**25.4**	① 25.4			

＊3: Basically 1 indoor unit connection is not allowed, but only ARXC90 is allowed single connection.

○ Example5 (System example of indoor unit other than ARXC90 is connected)

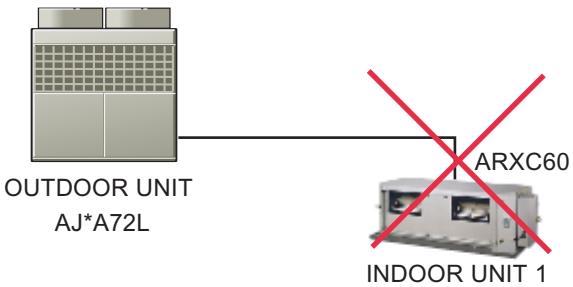

	Model	Capacity (kW)	Total capacity (kW)	Connectable indoor unit capacity		Judgement
				Min	Max	
OUTDOOR UNIT	AJ＊A72L	22.4	22.4	② **50%** **11.2kW**	③ 150% 33.6kW	②≦①≦③ 11.2kW＜17.0kW＜33.6kW ↓ **No Good ＊4**
INDOOR UNIT 1	**ARXC60**	**17.0**	① 17.0			

＊4: Even connectable capacity satisfy the limitation, it is prohibited to connect only 1 indoor unit other than ARXC90.

SYSTEM DESIGN

6-1-2. VRF NETWORK SYSTEM

■ THE MAXIMUM WIRING LENGTH OF VRF NETWORK SYSTEM

Transmission line	Maximum wiring length
Total wiring length of transmission	2000m
Max wiring length between units	400m

■ THE MAXIMUM CONNECTION OF VRF NETWORK SYSTEM

● Outdoor unit and indoor unit

	Series	The maximum connectable units in one VRF network system	
Outdoor unit	VRF V series	100	①
	VRF S series		
Indoor unit	VRF V series	400	②
	VRF S series		

① Maximum connectable outdoor units

Maximum connectable outdoor units are vary according to outdoor unit system.
(Due to network traffic between master unit and slave unit.)
For the multiple outdoor units system (V series) regards as following **count**.

- Confirm the number of refrigerant system
  - Q1 [system] : ONE outdoor unit system (Only master unit) : 1 count
  - Q2 [system] : TWO outdoor unit system (Master unit + Slave unit) : 4 counts
  - Q3 [system] : THREE outdoor unit system (Master unit + Slave unit + Slave unit) : 5 counts

- Maximum **counts** of outdoor units : 100 (counts)

  Q1 x 1 + Q2 x 4 + Q3 x 5 ≦ 100 (count)

[Example]

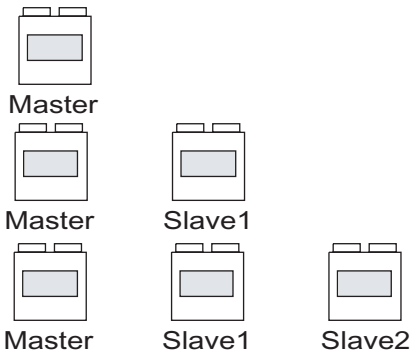

	Case 1	Case 2
Q1	Q1 = 10 [system]	Q1 = 10 [system]
Q2	Q2 = 10 [system]	Q2 = 5 [system]
Q3	Q3 = 10 [system]	Q3 = 10 [system]

Case 1: Outdoor unit = 10 x 1 + 10 x 4 + 10 x 5 = 100 (counts)

Case 2: Outdoor unit = 10 x 1 + 5 x 4 + 10 x 5 = 80 (counts)

② Maximum connectable indoor units : 400

SYSTEM DESIGN

■ CONTROLLER AND CONVERTOR

				Model	Maximum connectable units in one VRF network system	Remarks	
CONTROLLER	CENTRAL CONTROL	PC Controller	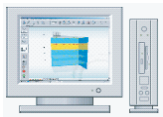	UTR-YOTB	1		Max controllable remote controller groups : 400 Max controllable indoor units : 400 Max controllable groups : 400
		Central Remote Controller		UTB-✱CA	16	Total number of Central Remote Controller and Network Convertor for Group Remote Controller is maximum 16.	Max controllable remote controller groups : 400 Max controllable indoor units : 400 Max controllable groups : 64
		Group Remote Controller		UTB-✱DB	64		When Group Remote Controller is used, Network Convertor (UTR-YRDA) is required. Max controllable remote controller groups : 8 Max controllable indoor units : 96
	INDIVIDUAL CONTROL	Wired Remote Controller		UTB-✱UB	——		Max controllable indoor units : 16
		Simple Remote Controller (with master control)		UTB-✱PB	——		Max controllable indoor units : 16
		Simple Remote Controller (without master control)		UTB-✱RA	——		Max controllable indoor units : 16
		Wireless Remote Controller		UTB-✱VB	——		Max controllable indoor units : 16
ADAPTOR / CONVERTOR		BACnet Gateway (Software)	CD-ROM (Software) Software protection key	UTR-YLBA	1		Max connectable VRF network systems : 4 Max connectable indoor units : 1600
		Network Convertor for LonWorks	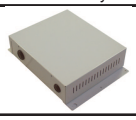	UTR-YLLA	1		Max oonnectable indoor units : 128
		Signal Amplifier		UTR-YRPC	8		The signal amplifier is required when 500m or more in transmission line length or connected unit exceeds 64 units.
		Network Convertor		UTR-YRDA	**Used for connecting split system** 100	Total number of refrigerant system and network convertor is maximum 100.	Max connectable Single split or Big multi type in a UTR-YRDA : 16 units
					Used for connecting group remote controller 16	Total number of Central Remote Controller and Network Convertor for Group Remote Controller is maximum 16.	Max connectable Group Remote Controller : 4 units One network convertor(UTR-YRDA) covers 2 refrigerant systems.
		External Switch Controller		UTR-YESA	——		Max connectable indoor units : 16
SERVICE & MAINTENANCE		Service Tool		UTR-YSTC	1	1 Service Tool or 1 Web Monitoring Tool can be connected.	PC : Field supplied. Transmission adaptor or USB adaptor is required.
		Web Monitoring Tool		UTR-YMSA		Max 4 VRF network system can be connected in one Web Monitoring Tool.	Web Monitoring Tool Internet explorer 6.0 or more PC : Field supplied Up to 4 VRF network system can be observed with one Web Monitoring Tool.

SYSTEM DESIGN

SYSTEM DESIGN

■ MAXIMUM CONNECTION OF NETWORK SEGMENT

● Network segment : divided network by signal amplifer

✱ In the following case, signal amplifier is required.

(1) When the total length of the transmission line exceeds 500 m.

(2) When the number of total unit* is over 64.

✱ When a signal amplifier is installed, network is divided into two network segments.

In a network segment(NS), divided by a signal amplifier, have to keep the following facts.

Segment inside	LIMITATION
Transmission line	500m or less
Number of unit *1	64 or less
Terminal resistor	1
Total number of control unit *2	2

* Unit means indoor unit, outdoor unit, signal amplifier, central remote controller, PC controller and so on.

* Control unit means central remote controller, PC controller, Network convertor for LonWorks.

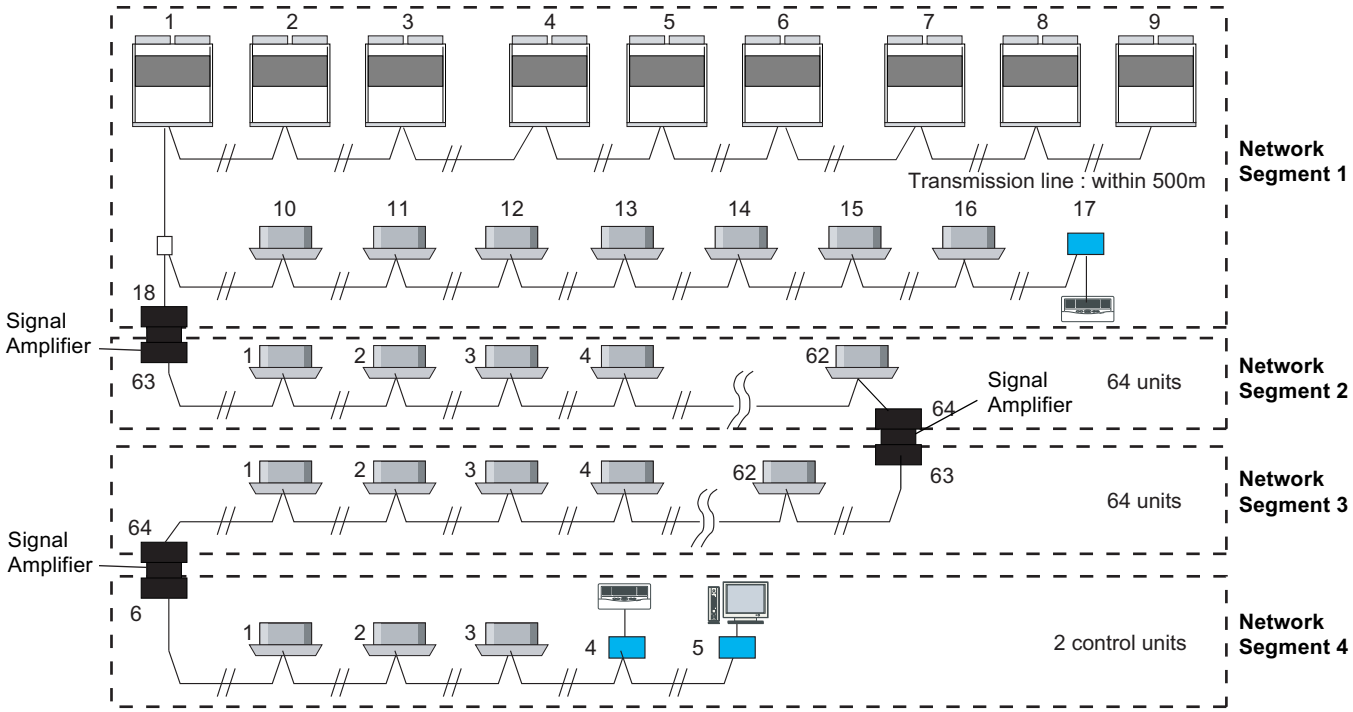

■ THE MAXIMUM WIRING LENGTH OF UNIT

Name	Model	Maximum wiring length	
Network convertor	UTR-YRDA	Total length of group remote controller to convertor : 100m	(1) Used for group remote controller
		Remote controller to UTR-YRDA :100m Indoor unit to UTR-YRDA : 100m	(2) Used for single split AC
Signal amplifier	UTR-YRPC	In each network segment : 500m	
External switch controller	UTR-YESA	External switch to UTR-YESA : 50m Indoor unit to UTR-YESA : 25m	
Wired , Simple Remote controller	UTB-✱UB UTB-✱PB UTB-✱RA	Remote controller cable : 500m	Max connectable 16 indoor units. 2 Remote controller connectable.

■ CAUTION

VRF network system should be satisfy both of number of unit and wiring length.
When system exceeds either number of unit or wiring length, system should be devided.

SYSTEM DESIGN

6-1-3. MOUNTING POSITION

■ OUTDOOR UNIT

For the air conditioner to operate satisfactorily, install it as outlines in installation manual.

● Outdoor unit mounting position

- ✳ A position that satisfies the mounting space described in “3-4 Installation space".
- ✳ A position where the unit can be installed horizontally.
- ✳ A position with enough space for performing pipe work, service and maintenance.
- ✳ A position where satisfies the height and pipe limitations between the outdoor units to be connected.

● Outdoor unit mounting limitation

- ✳ A position that is not exposed to strong or seasonal winds.
- ✳ A position where the blown air does not accumulate.
- ✳ A position where there are no obstructions to the air near to the inlet and outlet.
- ✳ A position not exposed to radiation from other heat sources.
- ✳ A position where the discharge air will not affect animals or plants.
- ✳ A position where the noise and hot air will not disturb the neighbour.
- ✳ A position with strong installation fixings, which can sufficiently bear the product weight.
- ✳ A position that does not transmit noise or vibration.
- ✳ A position where drain water discharge is not a problem.
- ✳ A position where snow does not accumulate.
- ✳ A position not easily affected by electrical noise.
- ✳ A position out of reach of children.
- ✳ A position where there is no danger of the generation, influx or accumulation of flammable gas.
- ✳ A position that does not have a special environment such as large amounts of oil, vapor or sulfide gas.

SYSTEM DESIGN

● Precaution for outdoor unit mounting position

- ✳ Mount the outdoor unit in a position where its tilt is 3 degrees or less.
- ✳ When mounting units on each floor or multiple units, secure enough outlet space to prevent a short circuit effect.
- ✳ In cold or snowy regions, make sure that the mount is high enough and install a snow protection hood.
- ✳ Drain water is discharged from the outdoor unit during operation, so make sure that this drain water is possible to flow.
- ✳ Use material such as vibration-resistant rubber to prevent the transmission of vibration to the floor.
- ✳ Securely fix the unit when it is in a position exposed to strong winds.

Make sure to mount the master unit closest to indoor unit side.

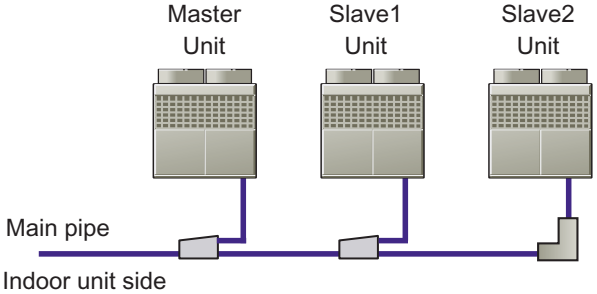

Installation Example

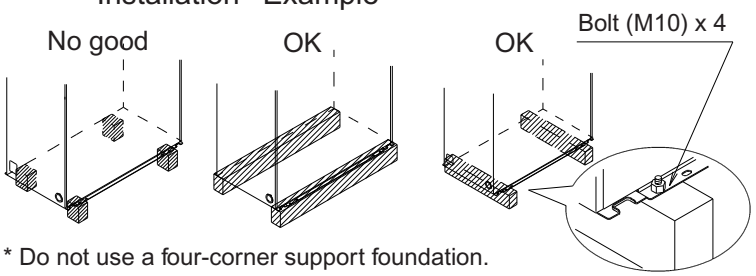

* Do not use a four-corner support foundation.

■ INDOOR UNIT

For the air conditioner to operate satisfactorily, install it as outlines in installation manual.

● Indoor unit mounting position

- ✳ Decide the mounting position with the customer
- ✳ Install the indoor unit level on a strong wall, floor, ceiling which is not subject to vibration.
- ✳ The inlet and outlet ports should not be obstructed. The air should be able to blow all over the room.
- ✳ Install the unit where the connection pipe can be easily installed.
- ✳ Install the unit where the drain pipe can be easily installed.
- ✳ Take servicing, etc. into consideration and leave the spaces. Also install the unit where the filter can be removed.
- ✳ Install the indoor unit where vibrations and noise are not amplified.

● Indoor unit mounting limitation

Install at a place that can withstand the weight of the indoor unit and install positively so that the unit will not topple or fall.

- ✳ Do not install where there is the danger of combustible gas leakage.
- ✳ Do not install near heat sources and the location with high temperature.
- ✳ Mount with the lowest moving parts at least 2.4m above floor or grade level.
- ✳ Do not install the unit near a source of heat, steam, or flammable gas.
- ✳ Do not use the unit for air conditioning or saving precision instrument, food, art, plants and animal as special place.
- ✳ If children may approach the unit, take preventive measures so that they cannot reach the unit.
- ✳ Avoid the places for installation, where there is oily smoke, machine oil (i.e. factory), salty environment with direct sea breeze, and too much of dust.
- ✳ Install the unit where drainage does not cause any trouble.
- ✳ Welding parts may be fretted if the unit is installed where corrosive gas such as sulphurous acid gas is generated.
- ✳ Control may not operate correctly if the unit is installed near machinery which generates electromagnetic ray.
- ✳ Install the unit in a well-ventilated place avoiding rains and direct sunlight.
- ✳ Install the unit where air from the outlet and noise do not disturb the neighbour.
- ✳ Install the indoor and outdoor units, power wiring, signal wiring and remote control wiring 1 m away from television and radio to avoid distorted images and noise. (However, distorted noise may not be avoidable even if units and wiring mentioned above are installed 1m away from television and radio depending on conditions of electromagnetic disturbance.)
- ✳ When installing an indoor unit in a small room, a countermeasure must be taken to keep refrigerant concentration limitations will never be exceeded even if there is a refrigerant leak.
- ✳ A sound might be heard from the indoor unit such as a refrigerant flowing sound. For using in small and quiet room such as bed room or hotel guest room, select the unit which has not exposed inside the room (Ex. Duct type) or the unit which connets EV kit separatery (Ex. Compact wall mounted comfort model + EV kit).

SYSTEM DESIGN

6-2. PIPING DESIGN

6-2-1. IMPORTANT ITEMS WHEN USING NEW REFRIGERANT (R410A)

R410A operates at higher pressure and has less solubility with mineral oil than traditional R22 refrigerant. Therefore, the lubricant and a part of pipe material are different. Some special tools are necessary.

■REFRIGERANT PIPING MATERIAL AND WALL THICKNESS

It is necessary to use seamless copper tubes for refrigerant use.
Thickness of tubes are shown in table below. The design pressure is 4.2 MPa.

Nominal Diameter	(in)	1/4"	3/8"	1/2"	5/8"	3/4"	7/8"	1-1/8"	1-3/8"	1-5/8"
Outside Diameter	(mm)	6.35	9.52	12.70	15.88	19.05	22.22	28.58	34.92	41.27
Material		JIS H3300 C1220T-O or equivalent 1)					JIS H3300 C1220T-H or 1/2H or equivalent 2)			
Wall Thickness 3)	(mm)	0.8	0.8	0.8	1.0	1.2	1.0	1.0	1.2	1.43

1) Allowable tensile stress ≧ 33 (N/mm^2); 2) Allowable tensile stress ≧ 61 (N/mm^2); 3) Design pressure 4.2MPa.

Please select the pipe size in accordance with local rules.

■LUBRICANT

Refrigerant	R410A (mixed refrigerant)	R407C (mixed refrigerant)	R22 (single refrigerant)
Lubricant	Synthetic oil (POE oil)		Mineral oil

■TOOLS

R410A work requires a number of special tools. Since the tools (with ※ symbol) for R22 work cannot be used for R410A, prepare them beforehand.

Tool name	Process and application	
Pipe cutter	Pipe cutting	Refrigerant piping work
※ Flaring tool	Pipe flaring work	
※ Torque wrench	Flare nut connection	
Expander	Expansion at pipe connection	
Pipe bender	Pipe bending work	
Nitrogen gas	Pipe interior oxidation prevention	Air tightness test
Welder	Pipe brazing	
※ Gauge manifold	Vacuum evacuation and refrigerant charging Operation check	Air tightness test ~ Refrigerant additional charging
※ Charging hose		
※ Vacuum pump(with adaptor)		Vacuum drying
Electronic scale for refrigerant charging		Refrigerant additional charging
※ Gas leak tester	Gas leakage test	

※ Please refer to a service manual for details.

SYSTEM DESIGN

■ WORK FLOW (EXAMPLE)

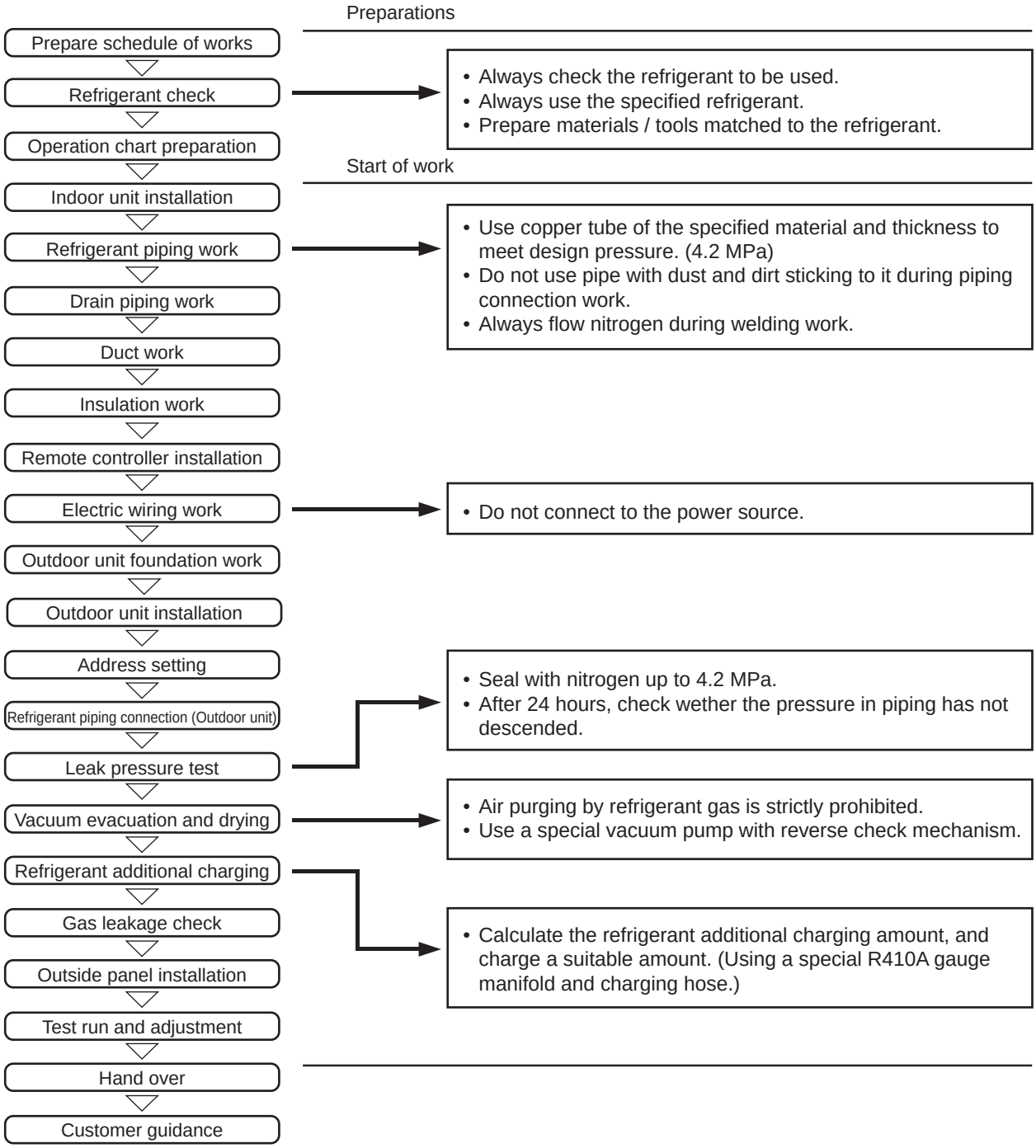

SYSTEM DESIGN

6-2-2. LIMITATIONS

● In the case of three outdoor units connected

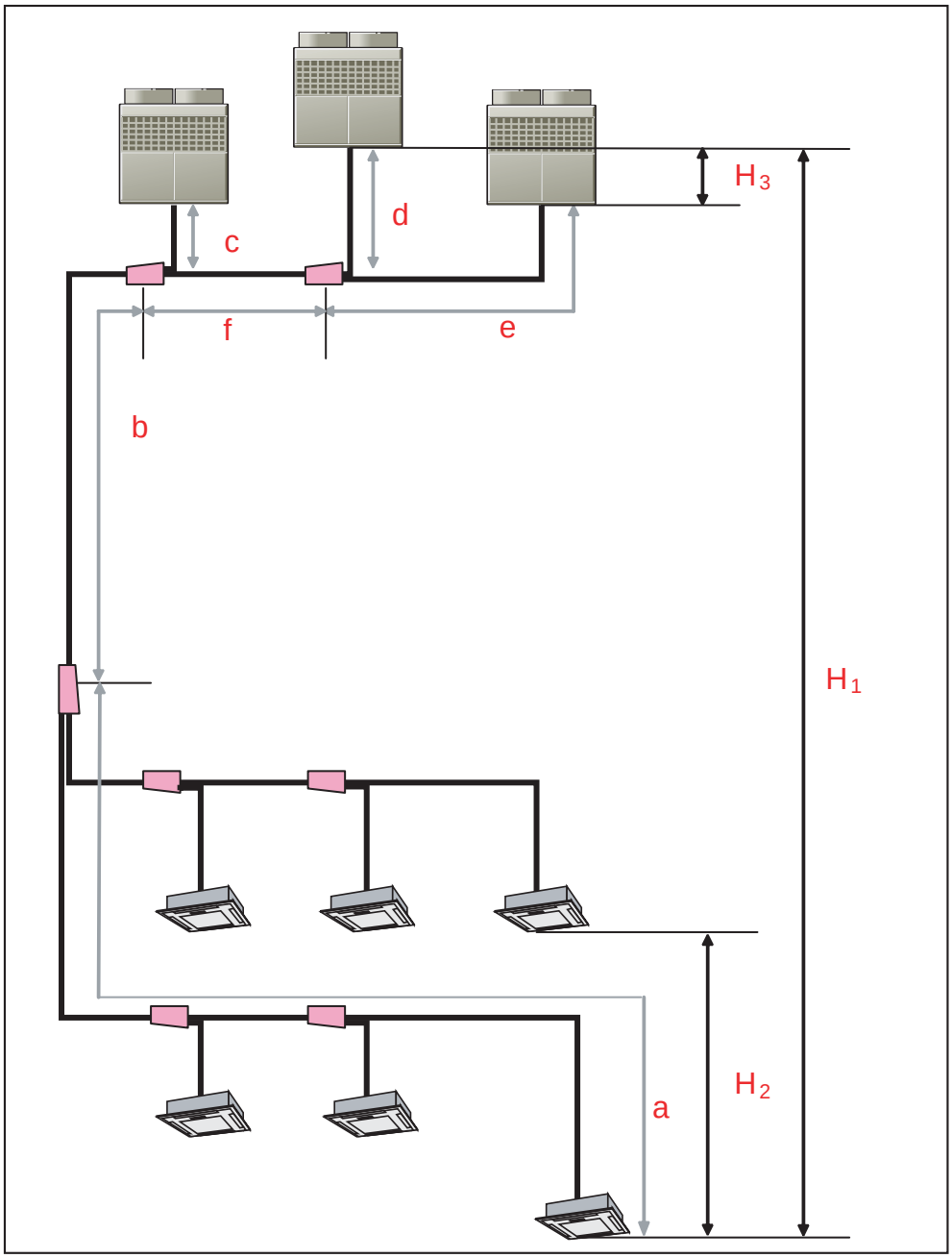

LIMITATIONS			DIAGRAM
Maximum allowable pipe length (actual pipe length)	Between master outdoor unit and the farthest indoor unit	150m	a + b + c
	Between the first separetion tube and the farthest indoor unit	60m	a
	Total pipe length	300m	Total
	Between outdoor unit and outdoor unit branch kit	3m	c,d,e
	Between the farthest outdoor unit to the first outdoor unit branch kit	12m	d+f,e+f
Maximum allowable height difference	Between outdoor unit and indoor unit	50m ✱1	H1
	Between indoor units	15m	H2
	Between outdoor units	0.5m	H3

✱1 : When outdoor unit is installed below, 40m

SYSTEM DESIGN

● In the case of two outdoor units connected

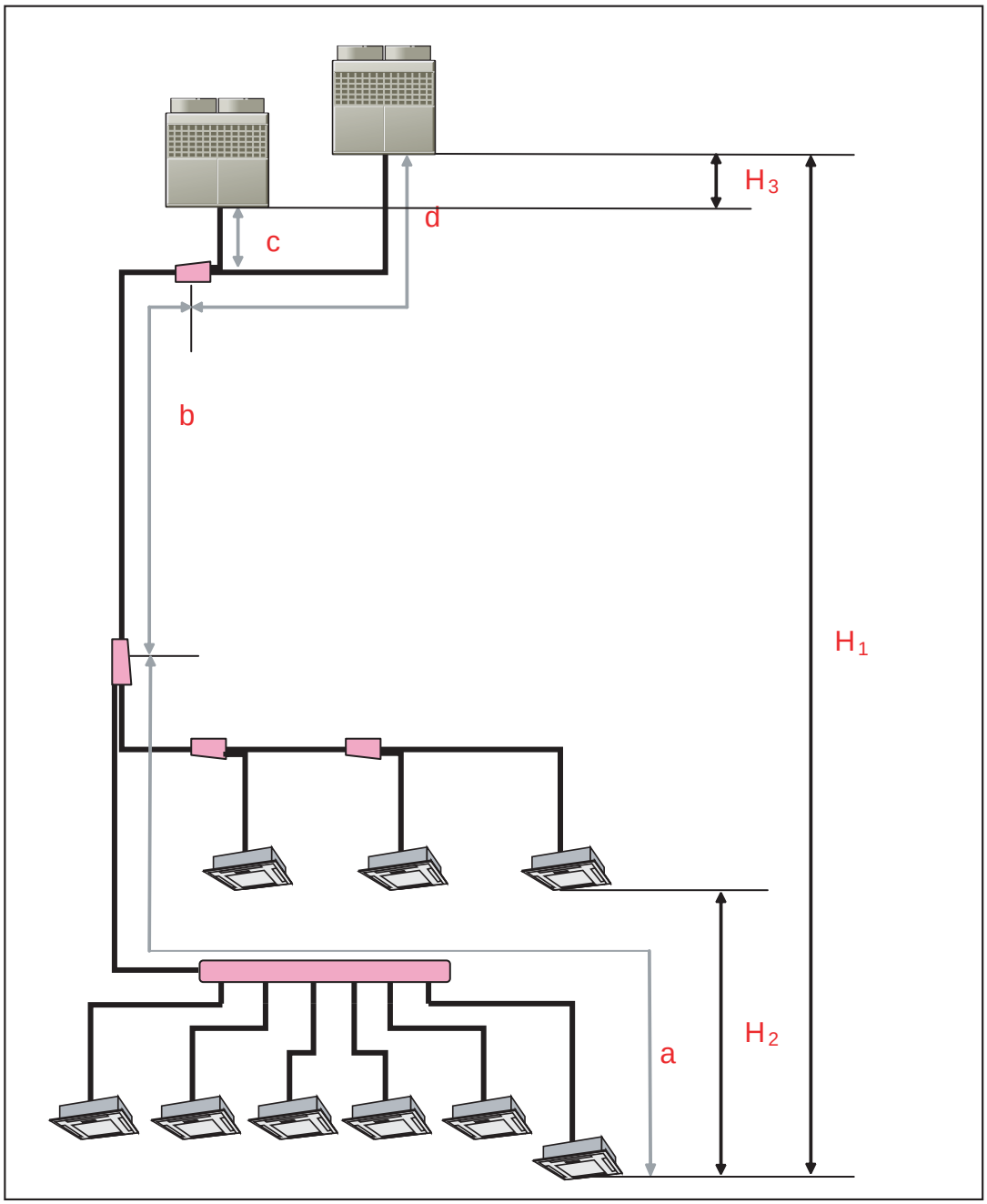

LIMITATIONS			DIAGRAM
Maximum allowable pipe length (actual pipe length)	Between master outdoor unit and the farthest indoor unit	150m	a + b + c
	Between the first separetion tube and the farthest indoor unit	60m	a
	Total pipe length	300m	Total
	Between outdoor unit and outdoor unit branch kit	3m	c,d
Maximum allowable height difference	Between outdoor unit and indoor unit	50m✱1	H1
	Between indoor units	15m	H2
	Between outdoor units	0.5m	H3

✱1 : When outdoor unit is installed below, 40m

SYSTEM DESIGN

● In the case of one outdoor unit connected

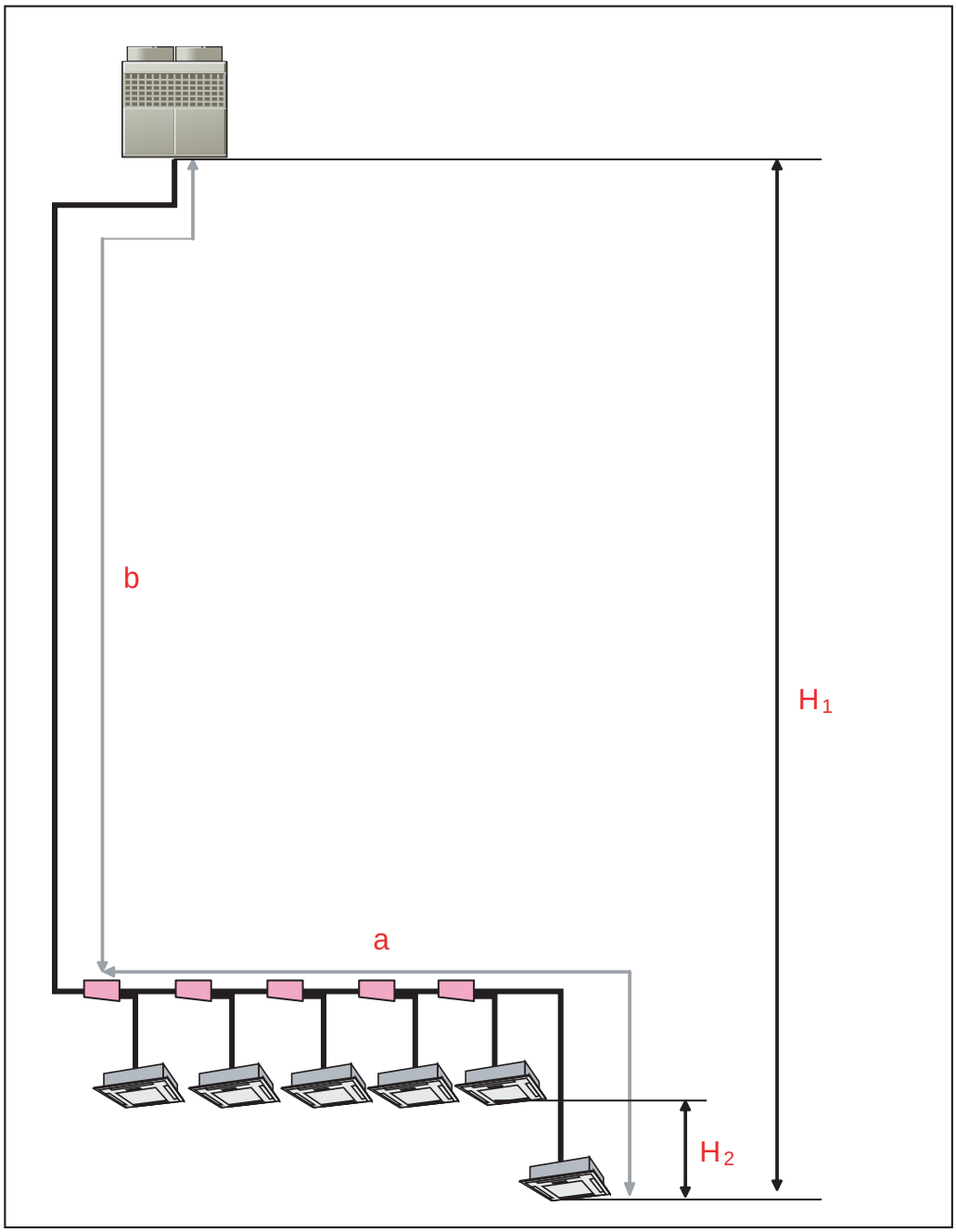

LIMITATIONS			DIAGRAM
Maximum allowable pipe length (actual pipe length)	Between outdoor unit and the farthest indoor unit	150m	a + b
	Between the first separetion tube and the farthest indoor unit	60m	a
	Total pipe length	300m	Total
Maximum allowable height difference	Between outdoor unit and indoor unit	50m ✱1)	H1 ✱2)
	Between indoor units	15m	H2

✱1) : When outdoor unit is installed below, 40m.

✱2) : When cooling operation will be conducted at outdoor air temperature below -5℃ , the outdoor unit must be installed in a position that is higher than or equal to those of indoor units.

SYSTEM DESIGN

■ CAUTION

Keep the "piping limitation" for correct operation.

● Allowable height difference:

If the height difference between the indoor unit and outdoor unit is larger than the allowable value:

✳ The pressure loss will be larger	⟶ Insufficient cooling and heating
✳ The refrigerant in liquid pipe will flush	⟶ Refrigerant flows noise generating at indoor unit
✳ The refrigerant oil will not return	⟶ Insufficient refrigerant oil resulting in compressor damage

If the height difference between indoor units is larger than the allowable value:

✳ The refrigerant flow balance will be poor	⟶ Insufficient cooling and heating (poor balance)
✳ Refrigerant oil will collect in the piping or non-operating indoor units	⟶ Insufficient refrigerant oil resulting in compressor damage

● Pipe length:

If the pipe length is longer than prescribed:

✳ The pressure loss will be larger	⟶ Insufficient cooling and heating
✳ Too much refrigerant will be charged	⟶ Liquid backs up resulting in compressor damage
✳ The refrigerant oil will not return	⟶ Insufficient refrigerant oil resulting in compressor damage

● Pipe size:

If the pipe size is larger than designated size:

✳ The refrigerant flow velocity will drop. Refrigerant oil will not return to the outdoor unit.	⟶ Insufficient refrigerant oil resulting in compressor damage
✳ The refrigerant in liquid pipe will flush easily	⟶ Insufficient cooling and heating

If the pipe size is smaller than designated size:

✳ The refrigerant circulation volume will drop	⟶ Insufficient cooling and heating
✳ The pressure loss will be larger	⟶ Insufficient cooling and heating

● Indoor unit connected capacity:

If the indoor unit connected capacity is larger than the system capable capacity:

✳ Insufficient system performance	⟶ Insufficient cooling and heating
✳ When heating, refrigerant will collect in non-operating indoor units resulting in an insufficient refrigerant circulation volume	⟶ Insufficient cooling and heating
✳ The refrigerant oil will not return	⟶ Compressor damage

If the indoor unit connected capacity is too small compared to the system capacity:

✳ The liquid return will be too great.	⟶ Compressor damage
✳ The refrigerant will concentrate in the operating unit	⟶ Continuous operation will become difficult due to triggering of the protection in response to the pressure high-rise, etc., and noise will be generated by the refrigerant flow when heating

SYSTEM DESIGN

6-2-3. PIPE SIZE

■ PIPE DIAMETER, RECOMMENDED MATERIAL AND WALL THICKNESS

Nominal Diameter	(in)	1/4"	3/8"	1/2"	5/8"	3/4"	7/8"	1-1/8"	1-3/8"	1-5/8"
Outside Diameter	(mm)	6.35	9.52	12.70	15.88	19.05	22.22	28.58	34.92	41.27
Material		COPPER JIS H3300 C1220T-O or equivalent 1)					COPPER JIS H3300 C1220T-H or 1/2H or equivalent 2)			
Wall Thickness 3)	(mm)	0.8	0.8	0.8	1.0	1.2	1.0	1.0	1.2	1.43

1) Allowable tensile stress ≧ 33 (N/mm^2); 2) Allowable tensile stress ≧ 61 (N/mm^2); 3) Design pressure 4.2MPa.

Please select the pipe size in accordance with local rules.

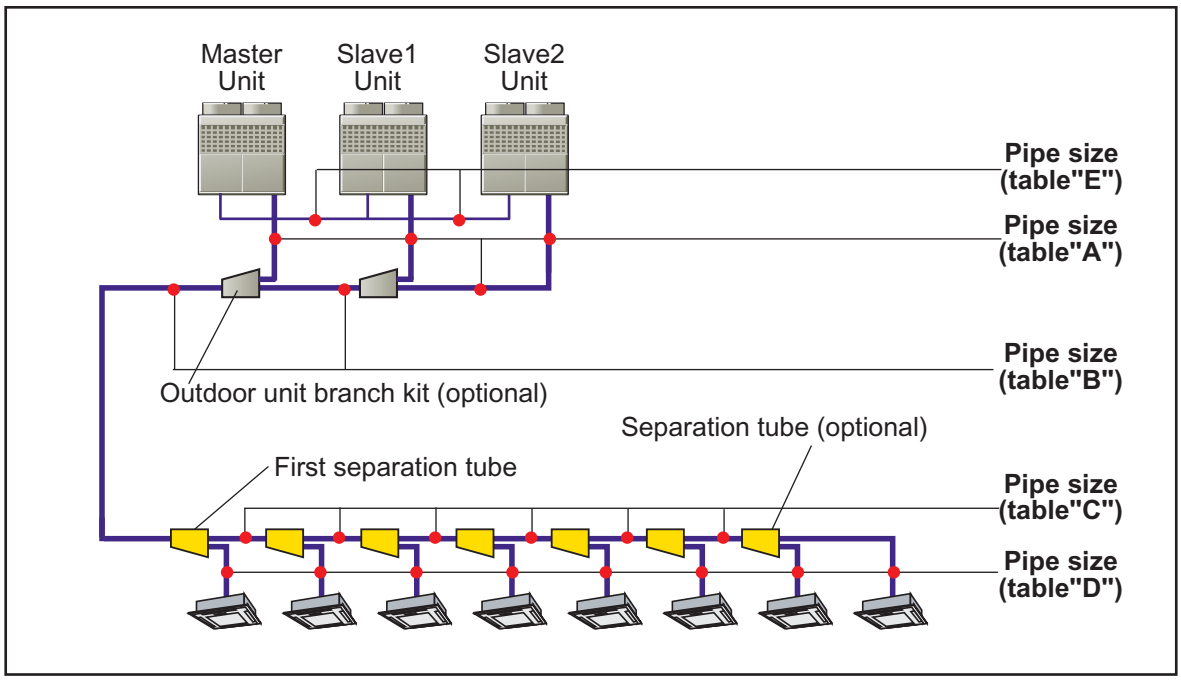

■ PIPE SIZE TABLE A

(BETWEEN OUTDOOR UNIT TO OUTDOOR UNIT BRANCH KIT)

HP	Outdoor unit model code	Outside diameter mm (in)		Branch kit
		Liquid pipe	Gas pipe	
8	72	12.70 (1/2")	22.22 (7/8")	UTR-CP567X or UTR-CP567L
10	90	12.70 (1/2")	22.22 (7/8")	
14	126	12.70 (1/2")	28.58 (1-1/8")	

SYSTEM DESIGN

■PIPE SIZE TABLE B
(BETWEEN OUTDOOR UNIT BRANCH KITS OR OUTDOOR UNIT BRANCH KIT TO FIRST SEPARATION TUBE)

Total capacity of outdoor unit	Outside diameter mm (in)	
HP	Liquid pipe	Gas pipe
8,10	12.70 (1/2")	22.22 (7/8")
14,16	12.70 (1/2")	28.58 (1-1/8")
18,20	15.88 (5/8")	28.58 (1-1/8")
22,24,26,28	15.88 (5/8")	34.92 (1-3/8")
30,32,34	19.05 (3/4")	34.92 (1-3/8")
36,38,42	19.05 (3/4")	41.27 (1-5/8")

■PIPE SIZE TABLE C
(BETWEEN SEPARATION TUBES)

Total model code of indoor unit	Outside diameter mm (in)		Separation tube
	Liquid pipe	Gas pipe	
14 to 35	9.52 (3/8")	15.88 (5/8")	UTR-BP090X or UTR-BP090L
36 to 53	9.52 (3/8")	19.05 (3/4")	
54 to 90	12.70 (1/2")	22.22 (7/8")	
91 to 161	12.70 (1/2")	28.58 (1-1/8")	UTR-BP180X or UTR-BP180L
162 to 180	15.88 (5/8")	28.58 (1-1/8")	
181 to 269	15.88 (5/8")	34.92 (1-3/8")	UTR-BP567X or UTR-BP567L
270 to 323	19.05 (3/4")	34.92 (1-3/8")	
324 to 567	19.05 (3/4")	41.27 (1-5/8")	

SYSTEM DESIGN

SYSTEM DESIGN

∗ If the pipe diameter between separation tubes (based on table "C") becomes larger than the pipe diameter between outdoor unit branch kit and the first separation tube (based on table "B"), please select a pipe whose diameter is equal to the one between outdoor unit branch kit and the first separation tube.

∗ "Total model code of indoor unit" is the total value for the indoor unit model code connected downstream.

■PIPE SIZE TABLE D
(BETWEEN SEPARATION TUBE TO INDOOR UNIT)

Model code of indoor unit	Outside diameter mm (in)	
	Liquid pipe	Gas pipe
7, 9, 12, 14	6.35 (1/4")	12.70 (1/2")
18, 20, 24,25, 30	9.52 (3/8")	15.88 (5/8")
36, 45, 54, 60	9.52 (3/8")	19.05 (3/4")
90	12.70 (1/2")	22.22 (7/8")

■PIPE SIZE TABLE E
(BETWEEN OUTDOOR UNITS)

Oil equalization pipe	6.35 (1/4")

■ OUTDOOR UNIT BRANCH KIT

System	Model	Q'ty
2 outdoor units	UTR-CP567X or UTR-CP567L	1
3 outdoor units		2

When using single outdoor unit, outdoor unit branch kit is not necessary.

■ INDOOR SIDE BRANCH KIT

● SEPARATION TUBE

Total model code of indoor unit	Separation Tube
90 or less	UTR-BP090X / UTR-BP090L
91 to 180	UTR-BP180X / UTR-BP180L
181 or more	UTR-BP567X / UTR-BP567L

● HEADER

Total model code of indoor unit	Header	
	3 - 6 Branches	3 - 8 Branches
90 or less	UTR-H0906L	UTR-H0908L
91 to 180	UTR-H1806L	UTR-H1808L

● EV KIT

These models are used for Compact Wall Mounted Type(Comfort model)
AS*E07LACF, AS*E09LACF , AS*E12LACF , AS*E14LACF

Application Model	Model
AS*E07LACF AS*E09LACF	UTR-EV09XA
AS*E12LACF AS*E14LACF	UTR-EV14XA

90, 91, 180 and 181 are the total values for the indoor unit model code connected downstream.

SYSTEM DESIGN

6-2-4. SELECTION OF PIPE HEAT INSULATING MATERIAL

* Always insulate the refrigerant pipe to prevent condensation and water droplets by the refrigerant pipe.

* Decide the thickness of the heat insulating material by referring to the recommended minimum thickness in Table 1.
  (For installation condition T=32 °C(DB),humidity≦70%, humidity≦75%, humidity≦80%, humidity≦85%)

* When the outdoor unit is installed in a higher position than the indoor unit, fill the connecting part gap with putty, etc. to prevent the dew condensation water of the valve of the outdoor unit from flowing to the indoors from the gap between the pipe and the heat insulating material.

* Liquid pipe and gas pipe should be completely insulated with same specification and sealed.

* In case not to insulate and not to seal refrigerant pipe completely, it will become the cause of water leak.

Table 1 Size of refrigerant pipe and recommended minimum thickness of heat insulating material
(In case a heat insulating material which thermal conductivity is equal to or less than 0.040 W/(m·k) is used.)

		Recommended minimum thickness for heat insulating material (mm)			
Relative humidity		≦ 70%	≦ 75%	≦ 80%	≦ 85%
Refrigerant pipe Outside daiameter mm(in)	6.35 (1/4")	8	10	13	17
	9.52 (3/8")	9	11	14	18
	12.70 (1/2")	10	12	15	19
	15.88 (5/8")	10	12	16	20
	19.05 (3/4")	10	13	16	21
	22.22 (7/8")	11	13	17	22
	28.58 (1-1/8")	11	14	18	23
	34.92 (1-3/8")	11	14	18	24
	41.27 (1-5/8")	12	15	19	25

* When an ambient temperature and relative humidity exceed 32 °C (DB)and≧85% respectively, please strengthen heat insulation of refrigerant pipe. If necessary put a heat insulation on indoor unit casing. When not strengthening heat insulation of refrigerant pipe, the surface of the heat insulation may be dewed.

* Since gas pipe becomes high temperature at heating operation for heatpump type, please select the heat insulating material which heat-resistant temperature is 120 °C or more.

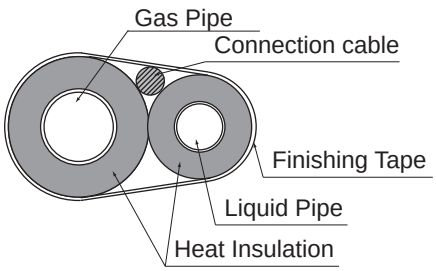

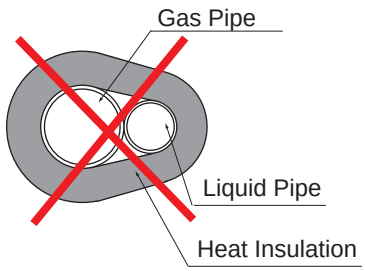

* Make sure that pipe is covered completely by the heat insulation,not expoding to air.
  Inadequate heat insulation may cause condensation.
* Do not covered heat insulation gas and liquid pipes together as above figure.
  It may cause condensation and capacity drop by heat loss.

SYSTEM DESIGN

6-2-5. ADDITIONAL CHARGE CALCULATION

- Additional refrigerant charge amount is calculated according to calculated value from its pipe length of liquid pipe and additional amount for outdoor unit.
- Round up the calculated result to two decimal places.

■ CALCULATION OF ADDITIONAL CHARGE REFRIGERANT

Model	Factory charged amount (kg)	A Additional amount for outdoor unit (kg)
AJÜA72LBTF	11.8	2.2
AJÜA90LBTF	11.8	2.2
AJÜ126LBTF	11.8	3.7
AJÜA72UBTF	11.8	2.2
AJÜA90UBTF	11.8	2.2
AJÜ126UBTF	11.8	3.7

Diameter of liquid pipe (mm)	B Additional amount for pipe length (kg/m)
6.35	0.021
9.52	0.058
12.70	0.114
15.88	0.178
19.05	0.268

● Calculation of additional amount for outdoor unit

A= Outdoor unit 1 additional amount for outdoor unit (kg) + Outdoor unit 2 additional amount for outdoor unit (kg) + Outdoor unit 3 additional amount for outdoor unit (kg)

● Calculation of additional amount for pipe length

B= Total length of ø19.05mm liquid pipe (m) x 0.268 kg/m (kg) + Total length of ø15.88mm liquid pipe (m) x 0.178 kg/m (kg) + Total length of ø12.70mm liquid pipe (m) x 0.114 kg/m (kg) +

Total length of ø9.52mm liquid pipe (m) x 0.058 kg/m (kg) + Total length of ø6.35mm liquid pipe (m) x 0.021 kg/m (kg)

● Calculation of additional charge refrigerant

C = A + B

SYSTEM DESIGN

6-2-6. EXAMPLE OF PIPING DESIGN

■ Refrigerant system 1

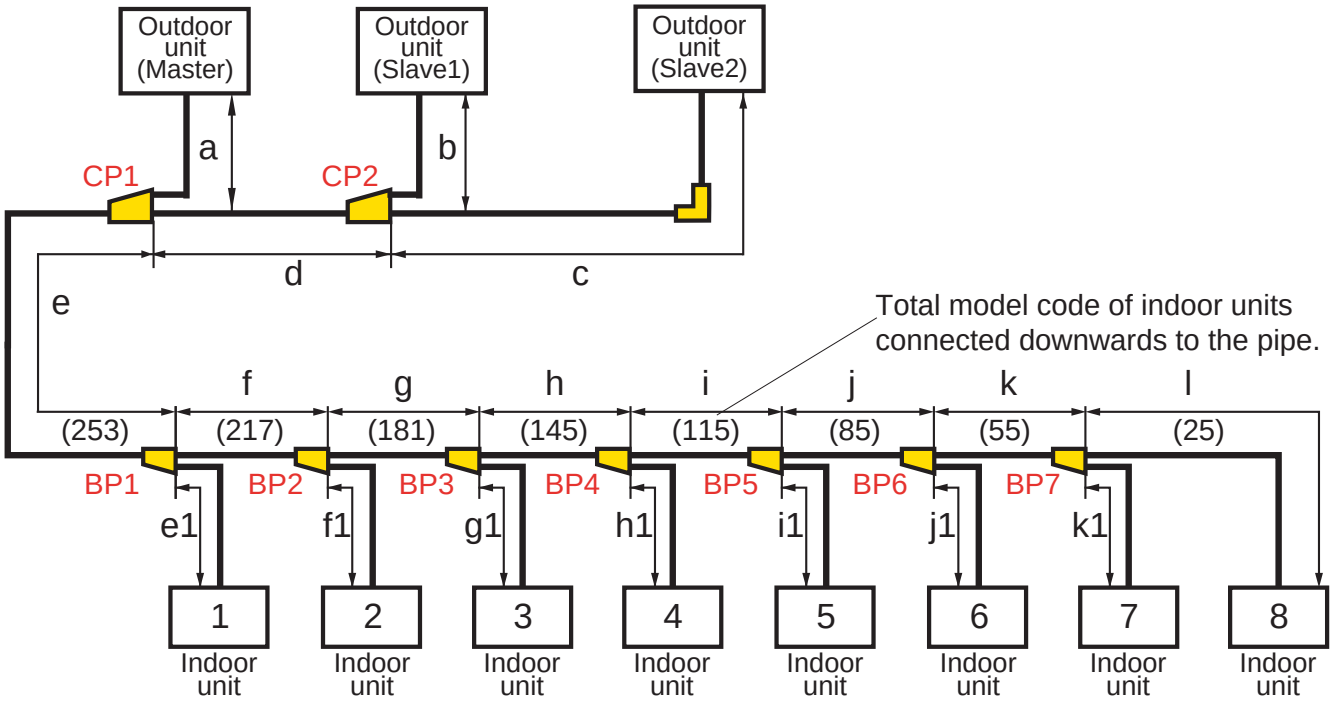

● SYSTEM CONFIGURATION (Indoor units)

	1	2	3	4	5	6	7	8	Total Capacity
Model name	ARXA36	ARXA36	ARXA36	ARXA30	ARXA30	ARXA30	ARXA30	ARXA25	73.7 (kW)
Capacity (kW)	10.5	10.5	10.5	8.80	8.80	8.80	8.80	7.00	

● SYSTEM CONFIGURATION (Outdoor units)

	Master	Slave 1	Slave 2	Total Capacity
Model name	AJ*A90LBTF	AJ*A72UBTF	AJ*A72UBTF	26HP 72.8 (kW)
Capacity (kW)	28.0	22.4	22.4	

● CAPACITY RATIO

$$\frac{\text{TOTAL INDOOR UNIT CAPACITY}}{\text{TOTAL OUTDOOR UNIT CAPACITY}} = \frac{73.7}{72.8} = 101.2\% \text{ (Within 50\% to 150\%)}$$

SYSTEM DESIGN

● SELECTION OF BRANCH KIT

Branch point No.	Total model code of downstream indoor units	Model
BP1	253	UTR-BP567X or UTR-BP567L
BP2	217	UTR-BP567X or UTR-BP567L
BP3	181	UTR-BP567X or UTR-BP567L
BP4	145	UTR-BP180X or UTR-BP180L
BP5	115	UTR-BP180X or UTR-BP180L
BP6	85	UTR-BP090X or UTR-BP090L
BP7	55	UTR-BP090X or UTR-BP090L
CP1	-	UTR-CP567X or UTR-CP567L
CP2	-	UTR-CP567X or UTR-CP567L

Required parts

Branch kit model	Q'ty
UTR-BP567X or UTR-BP567L	3
UTR-BP180X or UTR-BP180L	2
UTR-BP090X or UTR-BP090L	2
UTR-CP567X or UTR-CP567L	2

● SELECTION OF PIPE SIZE

	a	b	c	d	e	e1	f	f1	g	g1
Liquid Pipe	12.70	12.70	12.70	12.70	15.88	9.52	15.88	9.52	15.88	9.52
Gas Pipe	22.22	22.22	22.22	28.58	34.92	19.05	34.92	19.05	34.92	19.05
Length (m) Example	2	2	2	2	40	10	5	10	5	10

	h	h1	i	i1	j	j1	k	k1	l
Liquid Pipe	12.70	9.52	12.70	9.52	12.70	9.52	12.70	9.52	9.52
Gas Pipe	28.58	15.88	28.58	15.88	22.22	15.88	22.22	15.88	15.88
Length (m) Example	5	10	5	10	5	10	5	10	10

SYSTEM DESIGN

● Calculation of additional charge refrigerant

● Calculation of additional amount for outdoor unit

	Model	A Additional amount for outdoor unit (kg)
Outdoor unit 1	AJ∗A90L	2.20
Outdoor unit 2	AJ∗A72U	2.20
Outdoor unit 3	AJ∗A72U	2.20

A = 2.20 + 2.20 + 2.20 = 6.60 (kg)

● Calculation of additional amount for pipe length

Diameter of liquid pipe (mm)	19.05	15.88	12.70	9.52	6.35
B Additional amount for pipe length (kg/m)	0.268	0.178	0.114	0.058	0.021
Liquid pipe length (m)	0	50	28	80	0

B = (0.178 x 50) + (0.114 x 28) + (0.058 x 80) = 16.73 (kg)

● Calculation of additional charge refrigerant

Total additional amount : C = A + B = 6.60 + 16.73 = 23.33 (kg)

Check pipe length and height difference between units by comparing with items shown in " 6-1-2 Limitation".

SYSTEM DESIGN

■ Refrigerant system 2

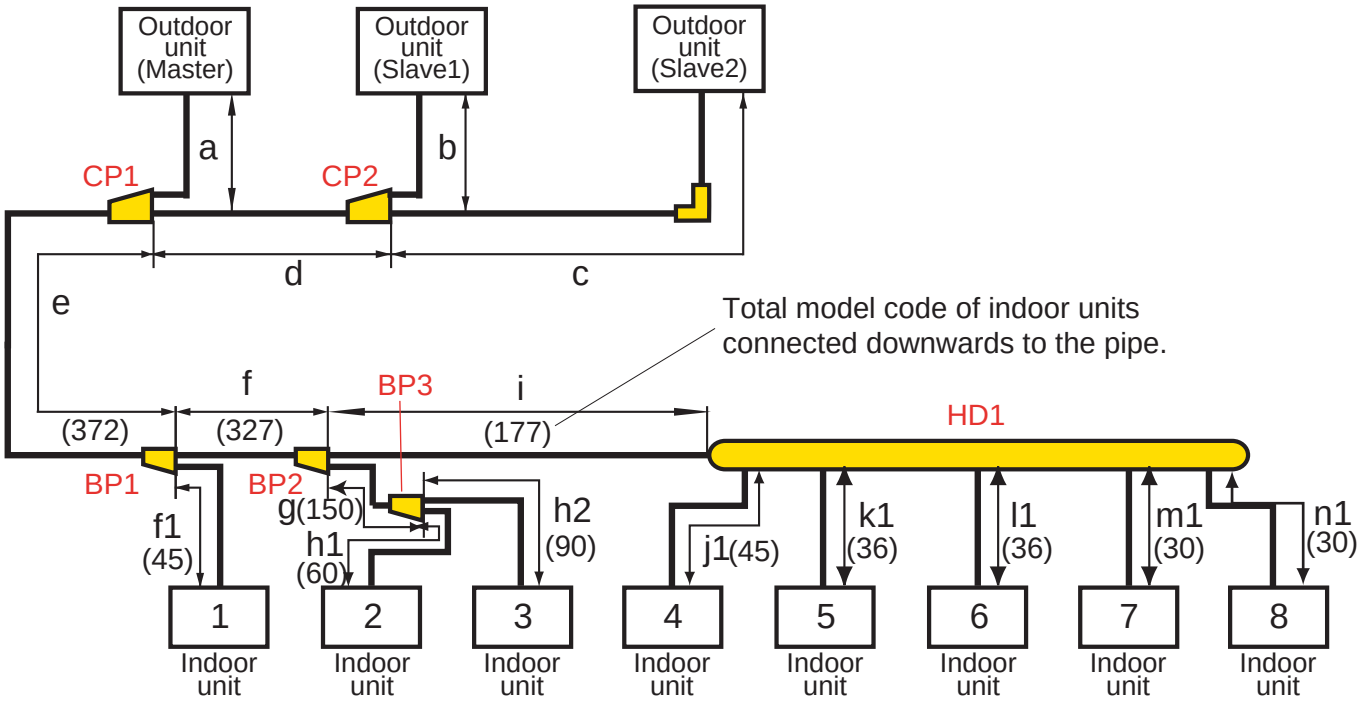

● SYSTEM CONFIGURATION (Indoor units)

	1	2	3	4	5	6	7	8	Total Capacity
Model name	AU*A45	ARXC60	ARXC90	AU*A45	AU*A36	AU*A36	AU*A30	AU*A30	106.4 (kW)
Capacity (kW)	12.7	17.0	25.4	12.7	10.5	10.5	8.80	8.80	

● SYSTEM CONFIGURATION (Outdoor units)

	Master	Slave 1	Slave 2	Total Capacity
Model name	AJ*126LBTF	AJ*A90UBTF	AJ*A72UBTF	32HP 90.4 (kW)
Capacity(kW)	40.0	28.0	22.4	

● CAPACITY RATIO

$$\frac{\text{TOTAL INDOOR UNIT CAPACITY}}{\text{TOTAL OUTDOOR UNIT CAPACITY}} = \frac{106.4}{90.4} = 117.7\ \%\ \text{(Within 50\% to 150\%)}$$

SYSTEM DESIGN

● SELECTION OF BRANCH KIT

Branch point No.	Total model code of downstream indoor units	Model
BP1	372	UTR-BP567X or UTR-BP567L
BP2	327	UTR-BP567X or UTR-BP567L
BP3	150	UTR-BP180X or UTR-BP180L
HD1	177	UTR-H1806L
CP1	-	UTR-CP567X or UTR-CP567L
CP2	-	UTR-CP567X or UTR-CP567L

Required parts

Branch kit model	Q'ty
UTR-BP567X or UTR-BP567L	2
UTR-BP180X or UTR-BP180L	1
UTR-H1806L	1
UTR-CP567X or UTR-CP567L	2

● SELECTION OF PIPE SIZE

	a	b	c	d	e	f*	f1	g	h1	h2
Liquid Pipe	12.70	12.70	12.70	15.88	19.05	19.05	9.52	12.70	9.52	12.70
Gas Pipe	28.58	22.22	22.22	28.58	34.92	34.92	19.05	28.58	19.05	22.22
Length (m) Example	2	2	2	2	40	10	10	5	5	10

	i	j1	k1	l1	m1	n1
Liquid Pipe	15.88	9.52	9.52	9.52	9.52	9.52
Gas Pipe	28.58	19.05	19.05	19.05	15.88	15.88
Length (m) Example	20	10	5	10	5	10

*note: Pipe size "f" selection :
Even though this pipe size might be selected based on downstream model code(327) 19.05 / 41.27,
This pipe size should not be larger than pipe size "e".
Therefore select pipe size equal to pipe size "e" (19.05 / 34.92).

SYSTEM DESIGN

● Calculation of additional charge refrigerant

● Calculation of additional amount for outdoor unit

	Model	A Additional amount for outdoor unit (kg)
Outdoor unit 1	AJ∗126L	3.70
Outdoor unit 2	AJ∗A90U	2.20
Outdoor unit 3	AJ∗A72U	2.20

A = 3.70 + 2.20 + 2.20 = 8.10 (kg)

● Calculation of additional amount for pipe length

Diameter of liquid pipe (mm)	19.05	15.88	12.70	9.52	6.35
B Additional amount for pipe length (kg/m)	0.268	0.178	0.114	0.058	0.021
Liquid pipe length (m)	50	22	21	55	0

B = (0.268 x 50) + (0.178 x 22) + (0.114 x 21) + (0.058 x 55) = 22.90 (kg)

● Calculation of additional charge refrigerant

Total additional amount : C = A + B = 8.10 + 22.90 = 31.00 (kg)

Check pipe length and height difference between units by comparing with items shown in " 6-1-2 Limitation".

SYSTEM DESIGN

6-3. PIPING CONNECTION

6-3-1. CAUTION OF PIPING

■CAUTION

✳Use the designated size (Diameter & thickness) of refrigerant pipes.

✳Those pipes purchased locally may contain dust inside.
Please blow out the dust by dried inert gas when using.

✳Be careful to avoid the dust or water falling into the pipe when performing piping process and piping installation.

✳When processing the pipe, make the number of bending portion as few as possible, and the bending radius as large as possible.

✳To process the branch, do not use T-shaped pipe, which causes a uneven refrigerant flow. Use the optionally available standard branch kit.

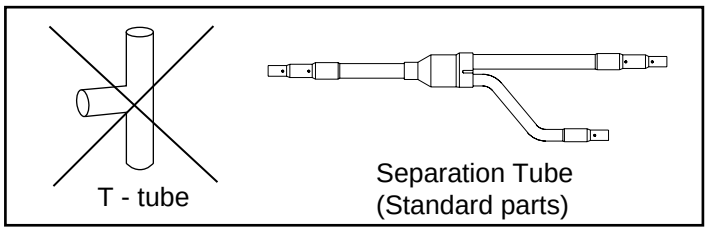

✳If the diameter of the required pipe is different from the branch unit, either cut it out or use the reducer.

✳Keep the permissible length of every piping limitation to prevent a defect or cooling/heating failure.

✳When replacing the unit, never use piping which has been used for previous installations. Only use the new piping.

✳While welding the pipes, be sure to blow dry nitrogen gas through them.

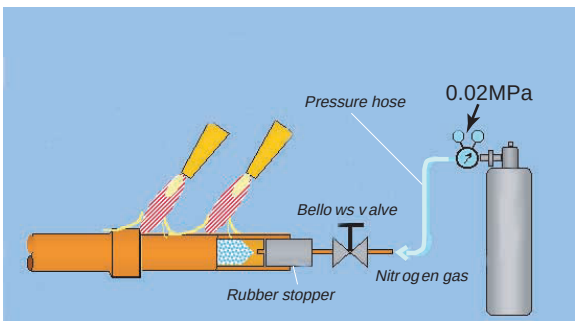

✳If nitrogen gas is not blown through the pipes while they are being welded, an oxidized layer may form on the inside of the pipes. If this occurs, the cooling efficiency may decrease and the air conditioner unit (compressor, valves, etc.) may malfunction.

✳The pipes vibrate, expand, and contract during operation, so if loads are concentrated in one area, it could cause cracks in the pipes. Provide the pipes with supports every 2 to 3m.

✳Make sure to insulate the refrigeration pipes separately with ample thickness of heat-resistant polyethylene form etc. For the connecting portion, apply the enough insulation to avoid any gap.

SYSTEM DESIGN

■ CAUTION

✳ Welding

While welding the pipe, be sure to blow dry nitrogen gas through the pipes.
If not used, it will be caused to damage for compressor and clog the strainer and electronic expansion valve.

Example) Inside state of welding pipe section

Nitrogen gas used	Nitrogen gas used but not sufficient (Oxygen gas still inside the pipe)	Nitrogen gas does not used

SYSTEM DESIGN

6-3-2. PIPING TO OUTDOOR UNIT

■ OUTDOOR UNIT POSITION

- ✳ When installing outdoor units, make the master unit closest to the main pipe.
- ✳ Select outdoor unit capacity in the order : Master unit ≧ Slave unit1 ≧ Slave unit2
- ✳ When connecting Master unit with Slave unit(s), install them as close as possible.
- ✳ When connecting Master unit with Slave units, connect pipe to the (optional branch kit) in correct direction.

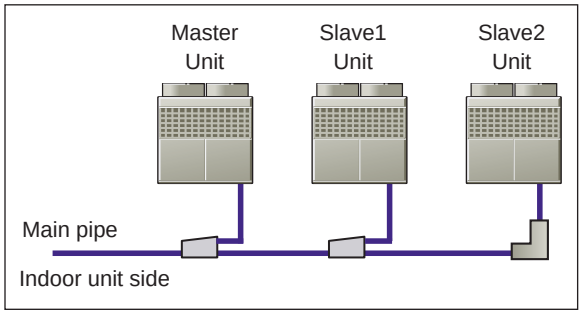

■ OUTDOOR UNIT PIPING DIRECTION

● 4-way piping direction

There are four possible ways to connect the piping to the outdoor unit.
Knockouts are provided all the place where the pipes need to be connected.

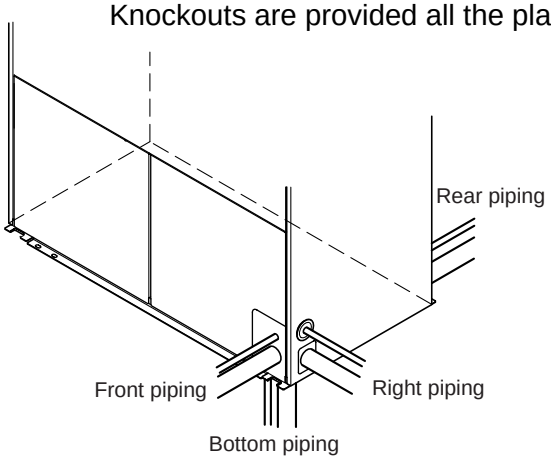

⚠ CAUTION

To avoid the wild animals may get in the unit, close up the space after the piping work. (where opened the hole for connecting the pipe)

Use care not to damage the panel or other components when opening the knockout hole.

After opening the knockout hole, perform edge treatment to remove burrs or other sharp areas that could damage the wiring and tubing.

Detail of knockout position (front / side / rear)

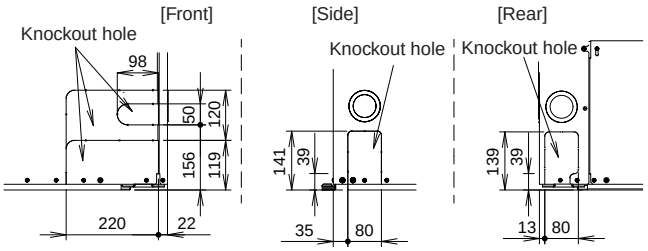

knockout position in bottom

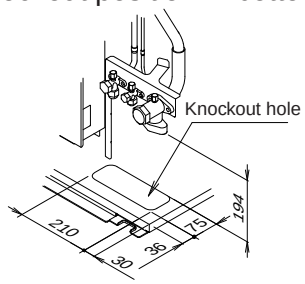

● Piping outlet example

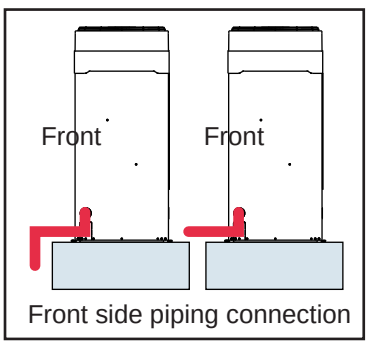

Front side piping connection

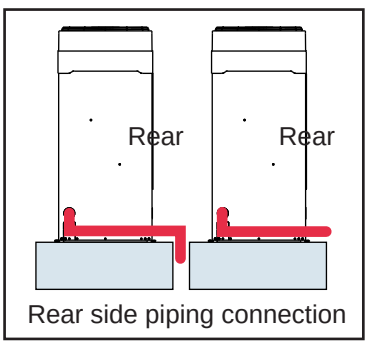

Rear side piping connection

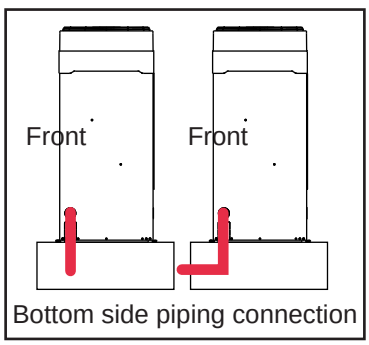

Bottom side piping connection

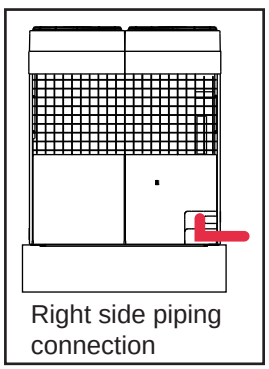
Right side piping connection

● Piping connection

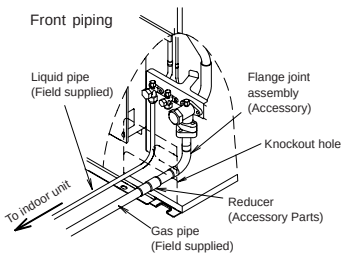

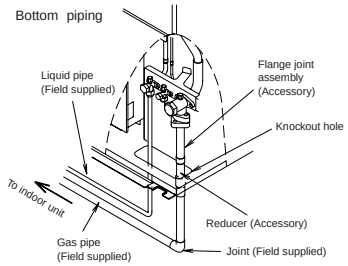

Cut off the bent section of the flange joint assembly when using it for bottom piping.

SYSTEM DESIGN

■ OUTDOOR UNIT PIPING POSITION

● Maximum height difference between outdoor units

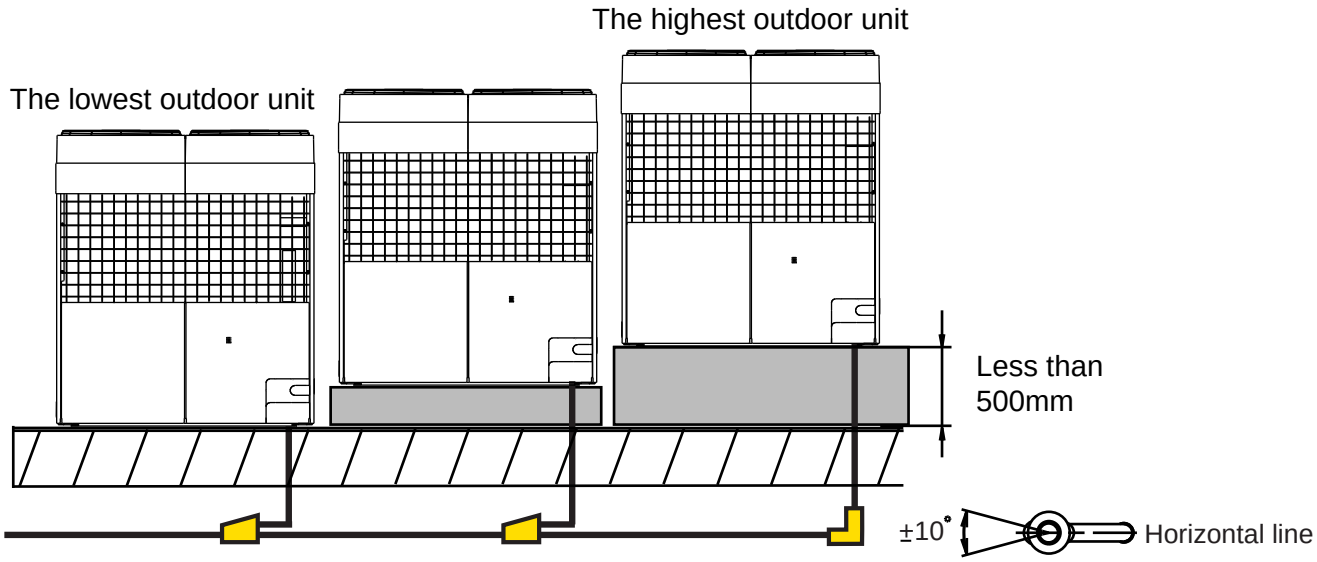

The height difference between the lowest and the highest outdoor unit in the same refrigerant system ≦ 500mm.
✳Install the branch kit horizontally.

● Maximum pipe length between outdoor units

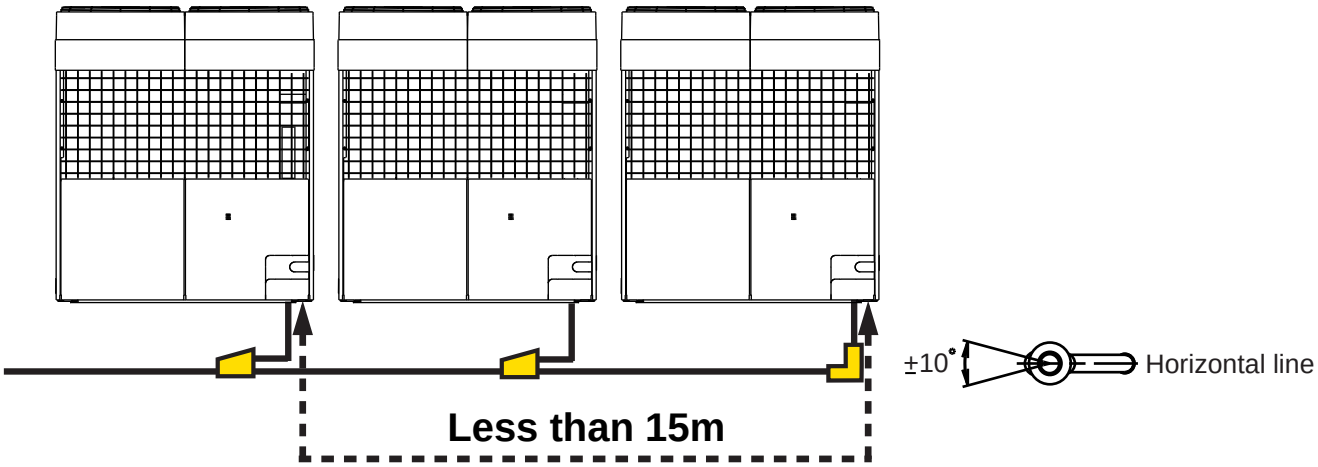

The maximum pipe length between master unit and the furthest slave unit ≦ 15m.
✳Install the branch kit horizontally.

● Piping space

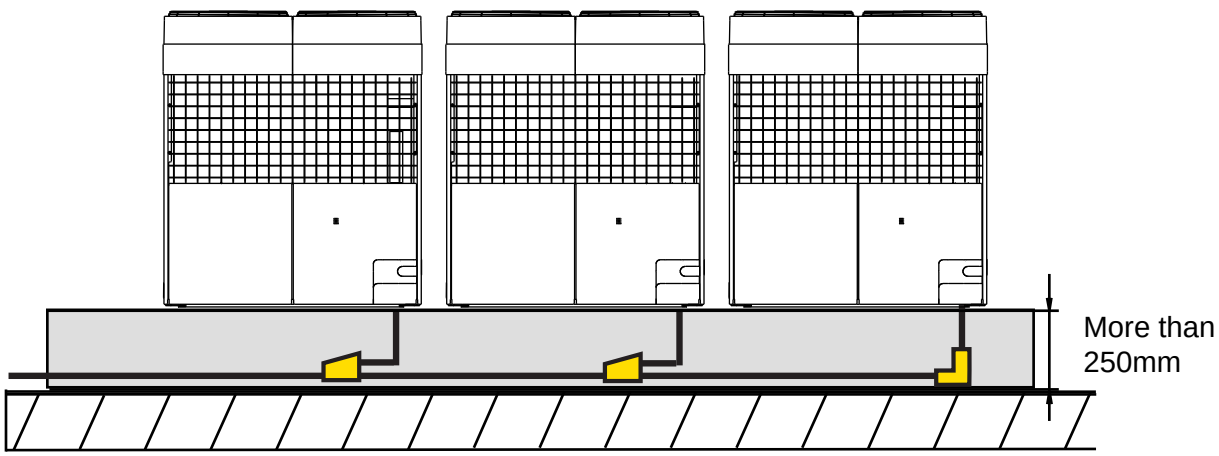

When installing piping from the bottom of the outdoor units, the required space under the outdoor unit ≧ 250mm.
✳Install the branch kit horizontally.

SYSTEM DESIGN

■ MAIN PIPE CONNECTION

When multiple outdoor units are connected in the same refrigerant system, connect the piping by referring to the following example to prevent the oil from collecting in the piping and the accumulated to stopped outdoor units.

● Permissible installation pattern

a) Straight angle

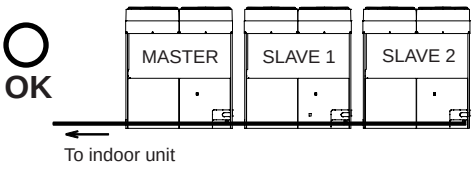

b) Downslope angle

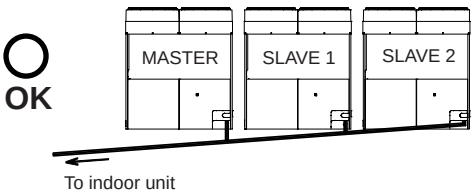

c) Downward

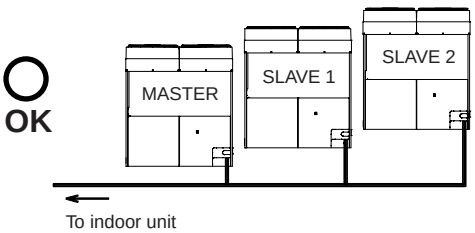

d) Downward

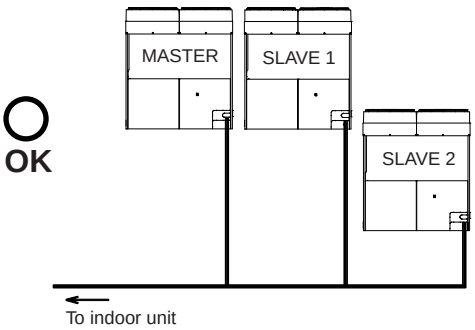

● Not permissible installation pattern

a) Upslope angle

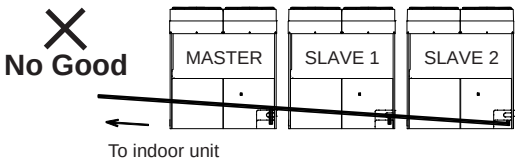

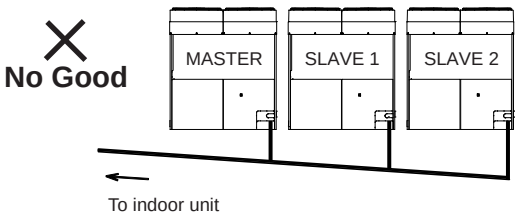

b) Upward

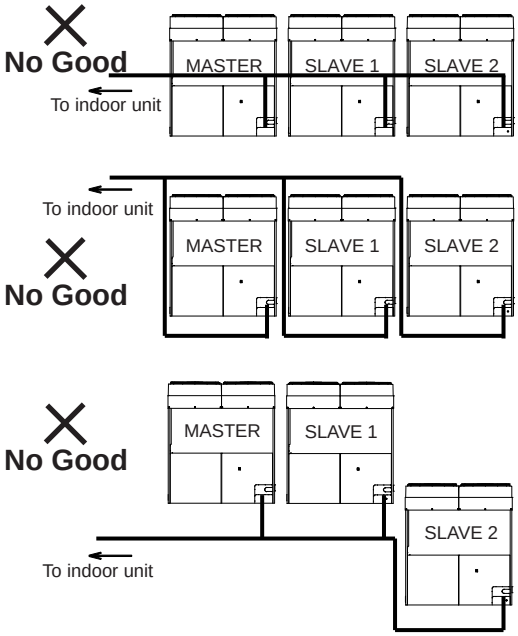

✳ If the pipe length between outdoor unit branch kit and outdoor unit branch kit (or slave unit) is longer than 2 m, or a lower pipe line exists between outdoor units, traps for gas pipe should be arranged to eliminate oil from entering into and remaining at pipes and the stopped outdoor unit. (See example below).

Example

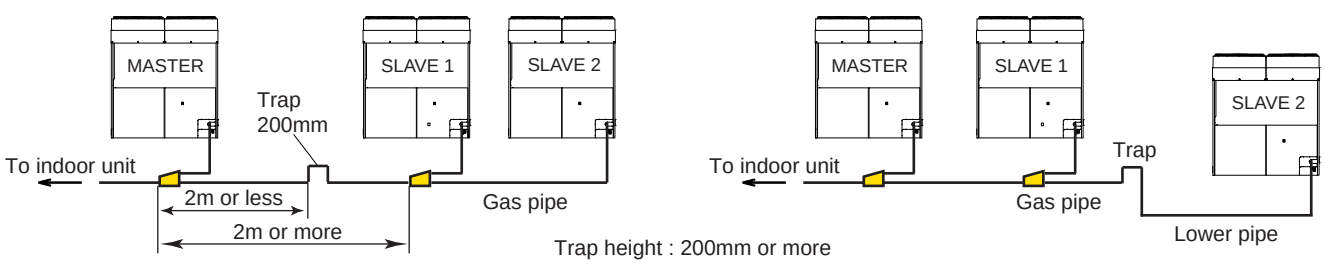

SYSTEM DESIGN

■ OUTDOOR UNIT BRANCH KIT CONNECTION

Outdoor unit	Model	Q'ty
2 outdoor units	UTR-CP567X / UTR-CP567L	1
3 outdoor units		2

● Installation

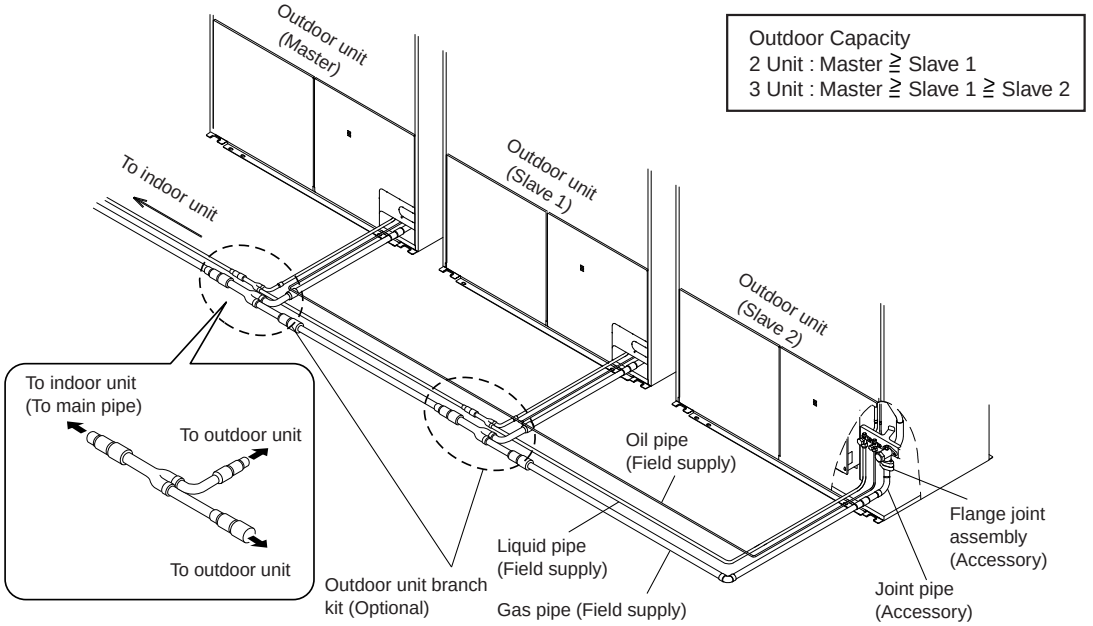

Use the pipe cutter to cut at the location which matches the piping size when the piping size is different.

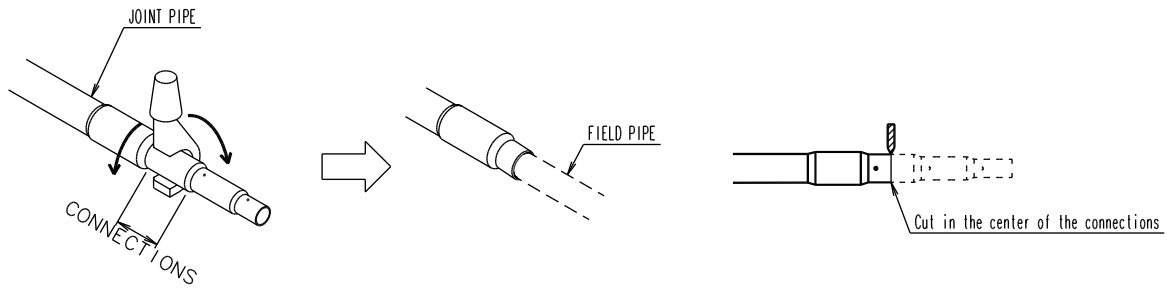

⚠ CAUTION

Outdoor unit branch kit

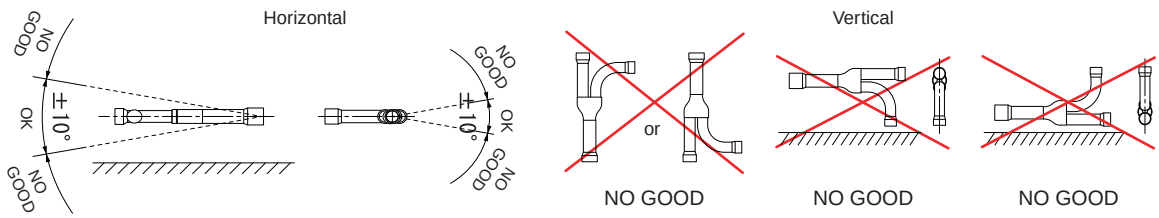

- Be sure to follow the installation restrictions for the outdoor unit branch kit and install it according to the conditions at the installation location.
- Install the outdoor unit branch kit horizontally, within ±10° , so that the refrigerant separates evenly. Do not install the outdoor unit branch kit vertically.

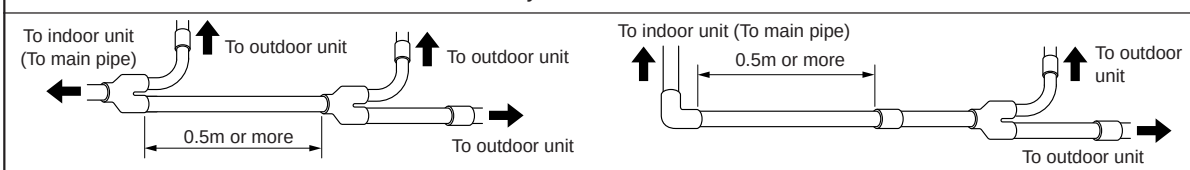

- Leave the distance 0.5m or more for straight part to outdoor unit branch kit.

- For details, refer to the Installation Instruction Sheet of the outdoor unit branch kit.

SYSTEM DESIGN

● Heat insulation installation (For UTR-CP567X)

After brazing the pipes, use the supplied insulation to insulate them. (on liquid and gas pipes)

1) Remove the protective sheet from the double-stick tape that is affixed to the heat insulation.

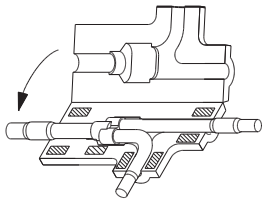

2) Be sure to install the tape (accessory) in each heat insulation to the 4 positions as shown in the following figure.

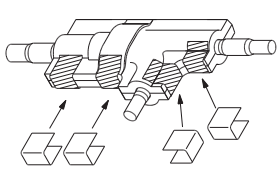

Liquid pipe

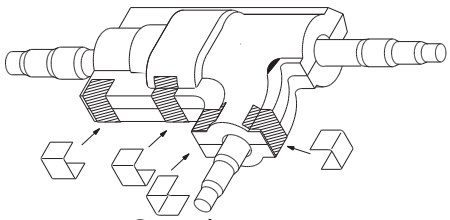

Gas pipe

3) Use tape (locally procured) to seal the seam so that there will be gap at the junction between the aforementioned heat insulation and the heat insulation on the local piping.

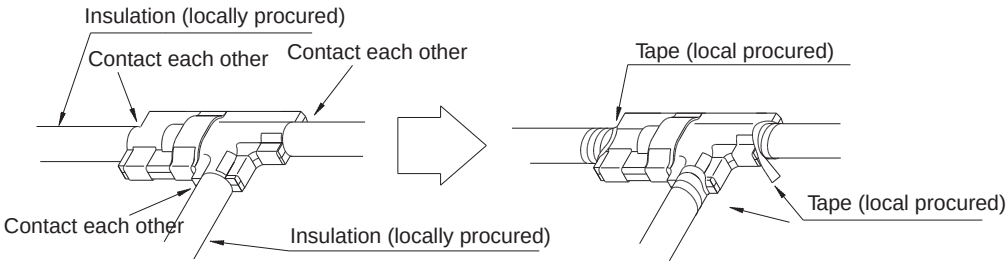

⚠ CAUTION

- **As with the gas pipes, fully insulate the liquid pipes. Unless they are thermally insulated, water condensation can cause accidents or reduction in performance.**
- **The heat insulation and the binders that secure the heat insulation can deteriorate after a long time has elapsed since their installation. Tape the exterior of the heat insulation or install a piping cover as a countermeasure a gainst deterioration.**
- **After installing the heat insulation, if you worry about possible condensation, please cover the heat insulation onto the gas pipe from top at field installation.**

[Add the standard of heat insulating material]

- **When using, the environment temperature should be higher than 35℃ and humidity over 85%.**
- **When using, the environment temperature should be higher than 25℃ and humidity over 90%.**

Installation example

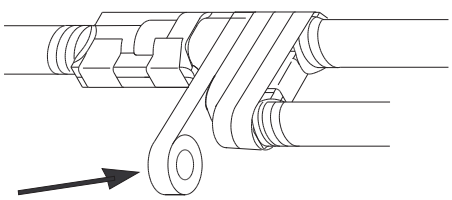

Heat insulation (locally procured)

SYSTEM DESIGN

● Heat insulation installation (For UTR-CP567L)

After brazing the pipes, use the supplied insulation to insulate them. (on liquid and gas pipes)

- Remove the protective sheet from the double-stick tape that is affixed to the heat insulation.
- Fold the heat insulation and use binders to secure the 3 locations.
- Use tape (locally procured) to seal the seam so that there will be no gap at the junction between the aforementioned heat insulation and the heat insulation on the local piping.

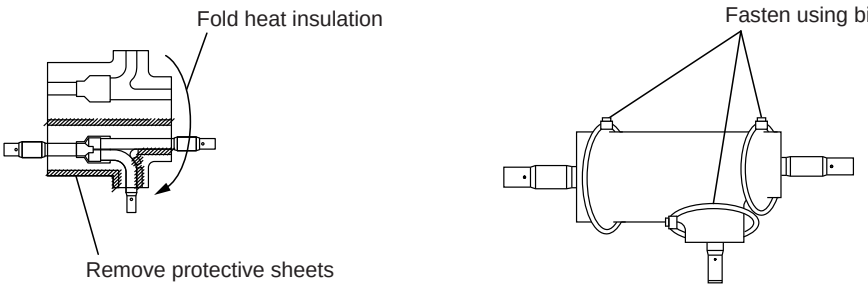

⚠CAUTION
As with the gas pipes, fully insulate the liquid pipes. Unless they are thermally insulated, water condensation can cause accidents or reduction in performance.
The heat insulation and the binders that secure the heat insulation can deteriorate after a long time has elapsed since their installation. Tape the exterior of the heat insulation or install a piping cover as a countermeasure against deterioration.

● Install the oil pipe as shown below

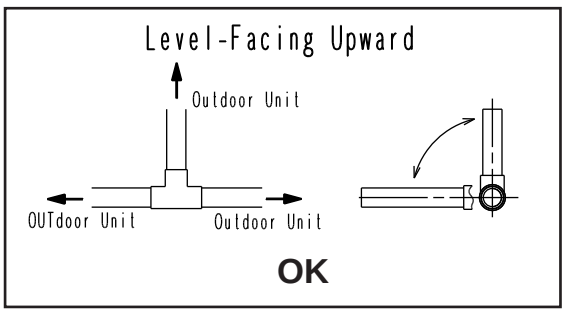

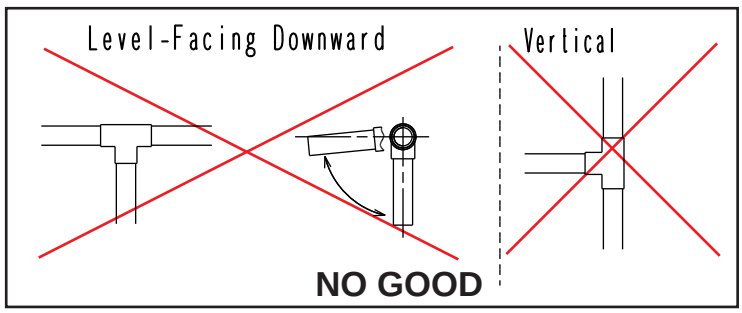

● Examples of multiple unit installation

(Example 1)

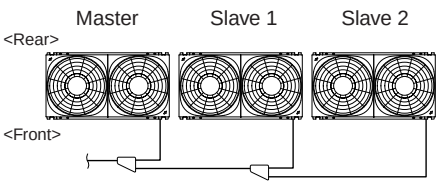

(Example 2)

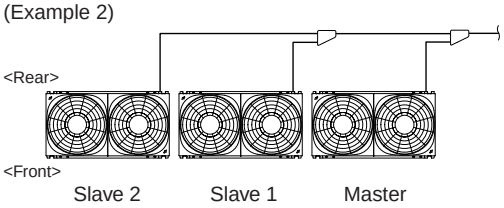

(Example 3)

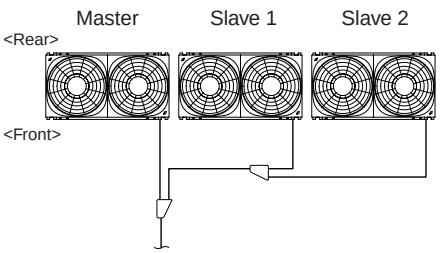

(Example 4)

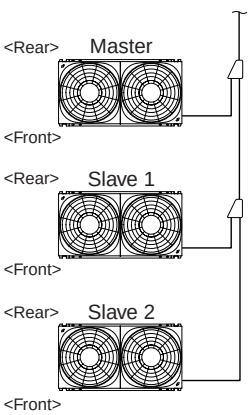

SYSTEM DESIGN

6-3-3. SEPARATION TUBE

■INSTALLATION

●Separation tube

Total model code of indoor units	Separation tube
90 or less	UTR-BP090X / UTR-BP090L
91 to 180	UTR-BP180X / UTR-BP180L
181 or more	UTR-BP567X / UTR-BP567L

90, 91, 180, and 181 are the total values for the indoor unit model code connected downstream.

●Installation angle

Install the separation tube so that it branches either horizontally or vertically.

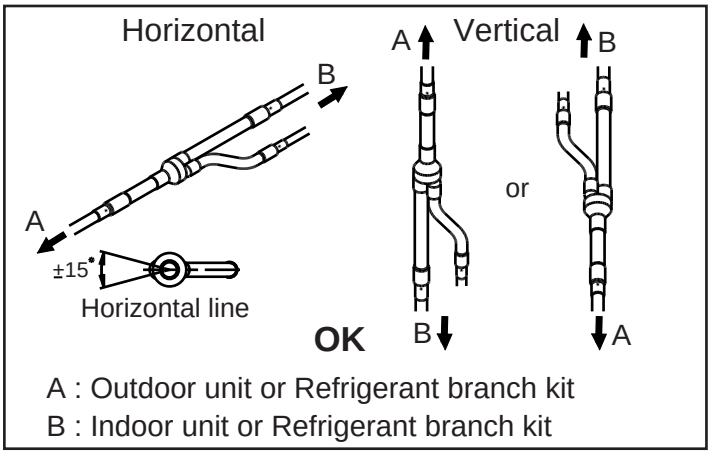

A : Outdoor unit or Refrigerant branch kit
B : Indoor unit or Refrigerant branch kit

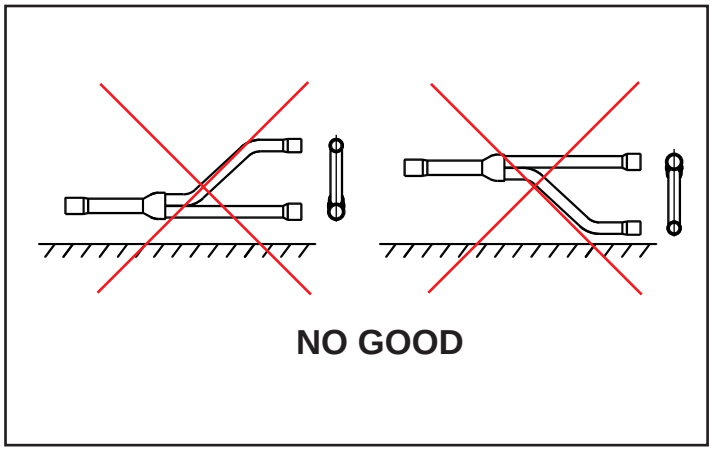

●Installation

Use the pipe cutter to cut at the location which matches the piping size when the piping size is different.

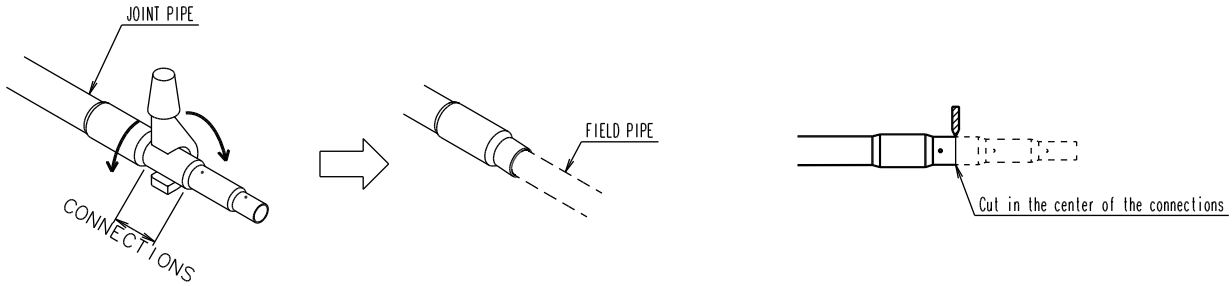

●Distance between separation tubes

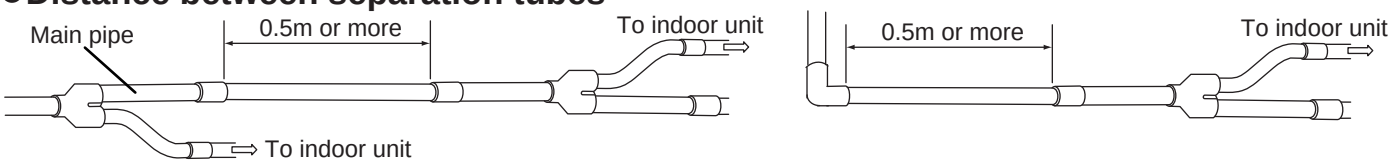

Caution

Leave the distance 0.5m or more for straight part to separation tube.
(To prevent the outdoor unit mulfunction and generation of refrigerant noise)

●Heat insulation installation (For UTR-BP090X, UTR-BP180X, UTR-BP567X)

After brazing the pipes, use the supplied insulation to insulate them.

1) Remove the protective sheet from the double-stick that is affixed to the heat insulation.

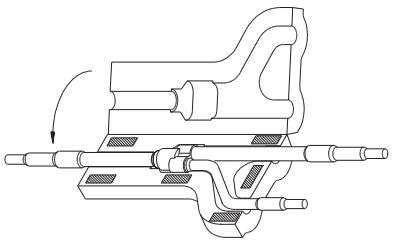

SYSTEM DESIGN

2) Be sure to install the tape (accessory) in each heat insulation to the 4 positions as shown in the following figure.

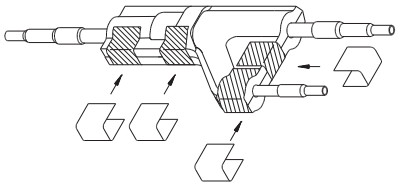

3) Use tape (locally procured) to seal the seam so that there will be no gap at the junction between the aforementioned heat insulation and the heat insulation on the local piping.

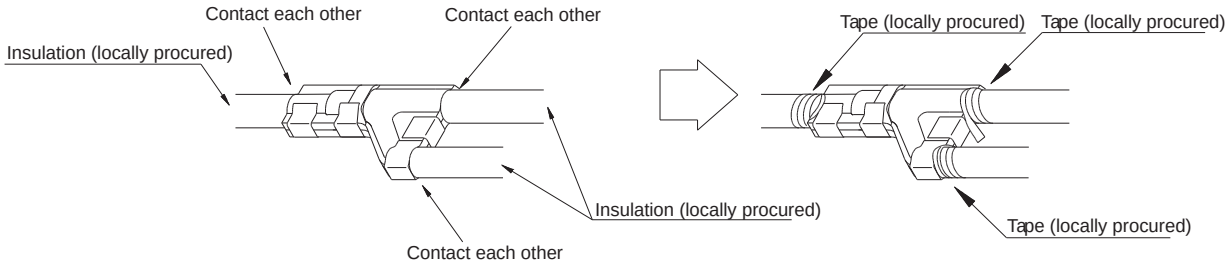

⚠ CAUTION

As with the gas pipes, fully insulate the liquid pipes. Unless they are thermally insulated, water condensation can cause accidents or reduction in performance.

After installing the heat insulation, if you worry about possible condensation, please cover the heat insulation onto the gas pipe from top at field installation.

[Add the standard of heat insulating meterial]

When using, the environment temperature shoud be higher than 35℃ and humidity over 85%.

When using, the environment temperature shoud be higher than 25℃ and humidity over 90%.

Installation example

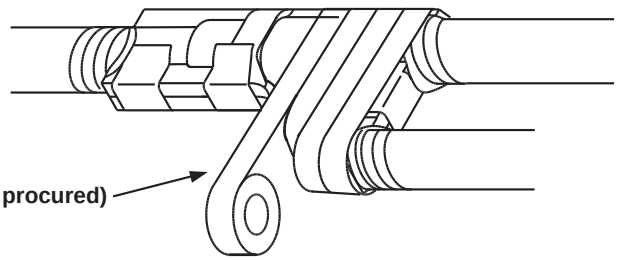

Heat insulation (locally procured)

SYSTEM DESIGN

SYSTEM DESIGN

●Heat insulation installation (For UTR-BP090L, UTR-BP180L, UTR-BP567L)

After brazing the pipes, use the supplied insulation to insulate them.

- Remove the protective sheet from the double-stick tape that is affixed to the heat insulation.
- Fold the heat insulation and use binders to secure the 2 locations.
- Use tape (locally procured) to seal the seam so that there will be no gap at the junction between the aforementioned heat insulation and the heat insulation on the local piping.

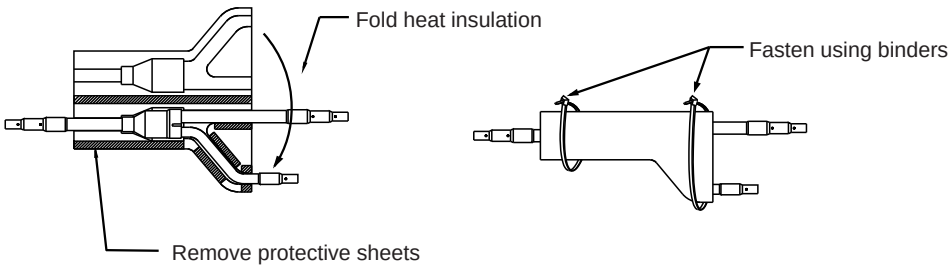

⚠CAUTION

As with the gas pipes, fully insulate the liquid pipes. Unless they are thermally insulated, water condensation can cause accidents or reduction in performance.

6-3-4. HEADER

■HEADER INSTALLATION

●Caution

Separation after header is not allowed.

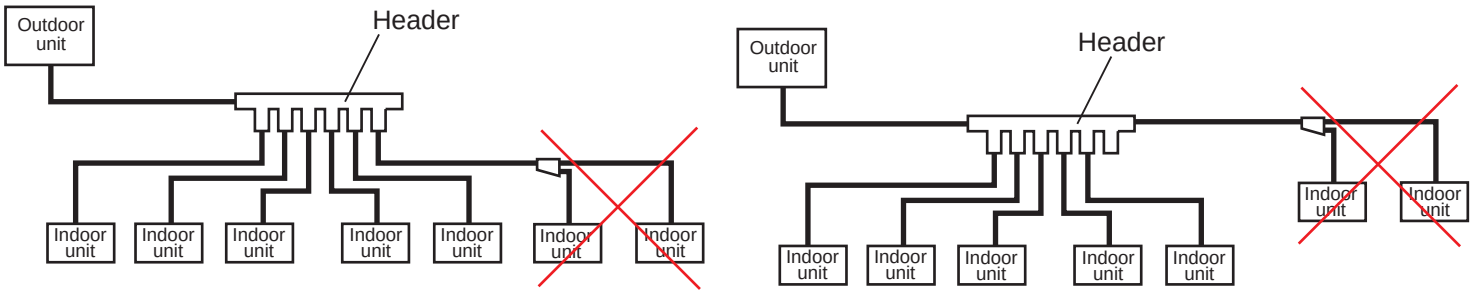

●Header selection

Total model code of indoor unit	Header	
	3 - 6 Branches	3 - 8 Branches
90 or less	UTR-H0906L	UTR-H0908L
91 to 180	UTR-H1806L	UTR-H1808L

Select the separation tube in case of total model code exceed 181.

●Piping connection

(1) When connecting the connection pipes from the indoor units, connect them to the header branch pipes in order of 1, 2, 3, etc.

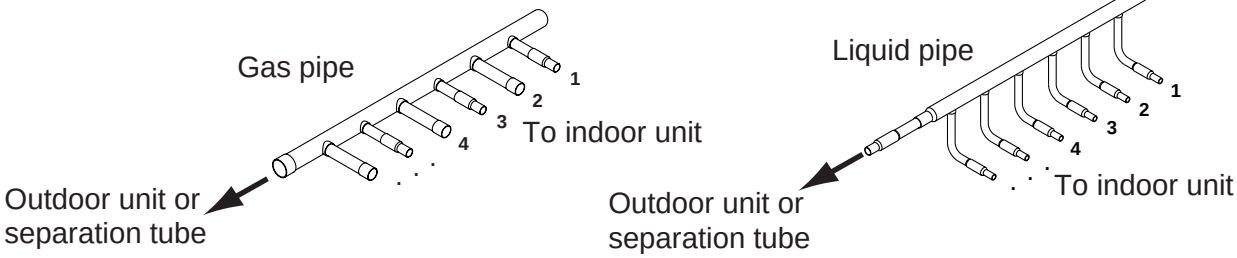

(2) Use a pipe cutter to cut at the location that matches the piping size or use expanders as necessary.

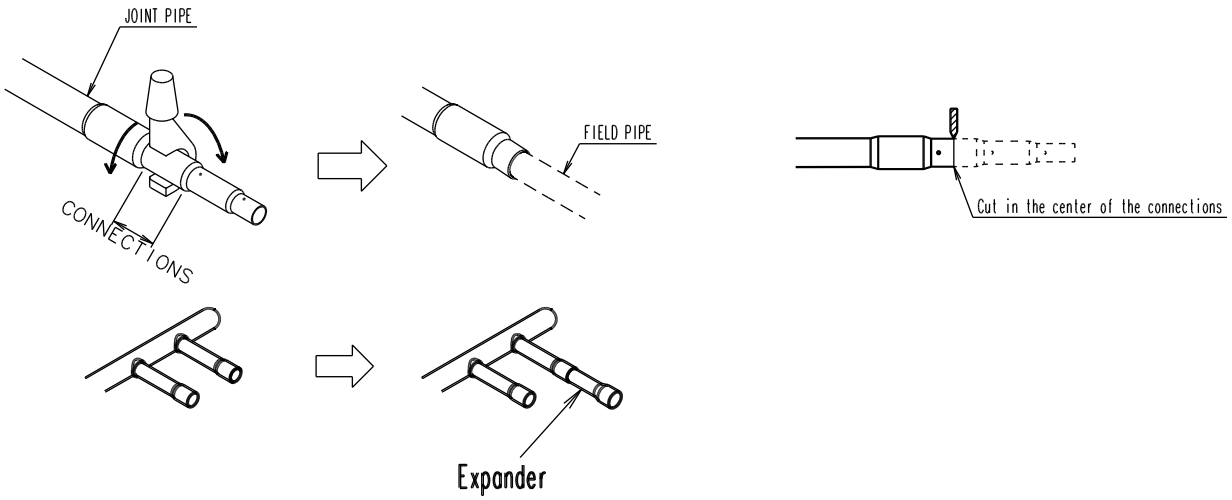

(3) Attach a plugging pipe provided if there is no piping connected at the headers.

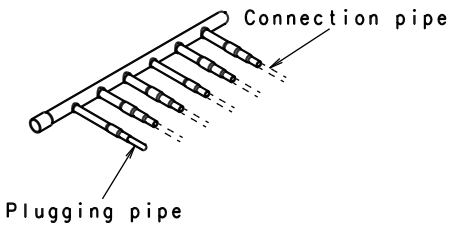

SYSTEM DESIGN

●Installation

∗Install the header so that it branches horizontally.

Gas pipe

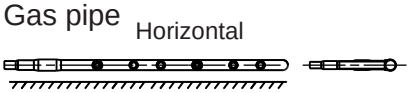

Liquid pipe

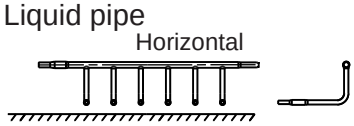

OK

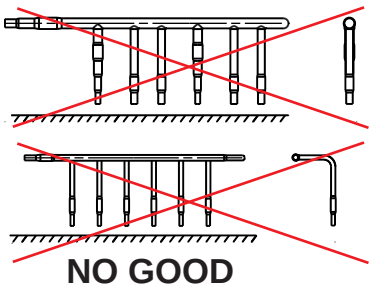

NO GOOD

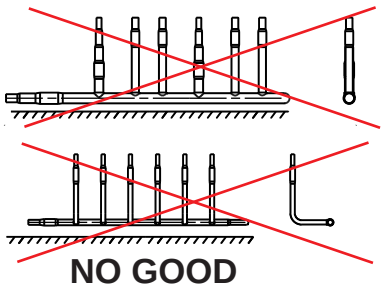

NO GOOD

∗Use header support as necessary.

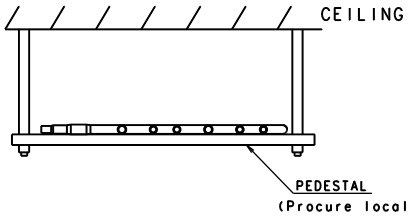

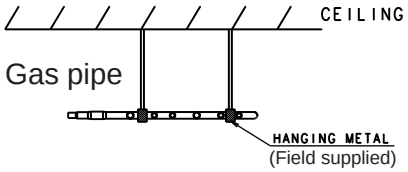

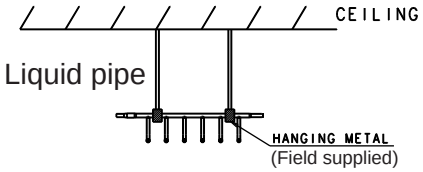

∗Use a level to make sure that the header is positioned as shown in following figure, and then, secure it in place.

Gas pipe

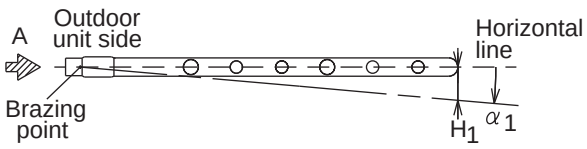

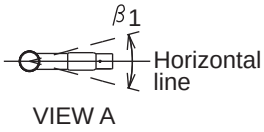

H_1= 0 mm ~ 10 mm

(α_1 : 0° ~ 1°)

β_1: -10° ~ 10°

Liquid pipe

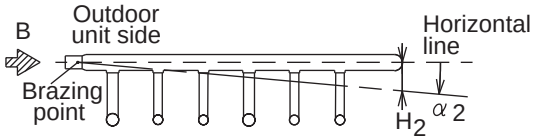

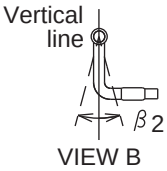

H_2= 0 mm ~ 10 mm

(α_2 : 0° ~ 1°)

β_2: -10° ~ 10°

∗Connecting the field piping from outdoor unit for opposite side,cut the pipe end to connect the pipe and close the opposite end.

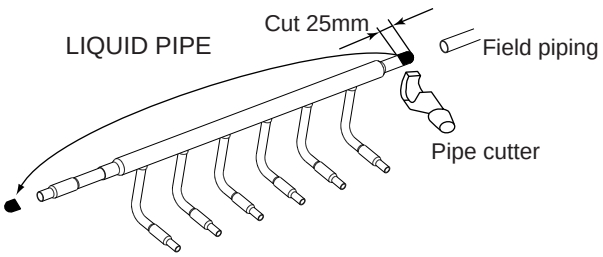

●Heat insulation installation

After brazing the piping, attach heat insulation.

Remove the protective paper for the tape on the heat insulation for the header and attach it.

Tighten by using binders in five locations.

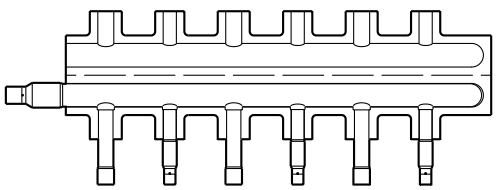

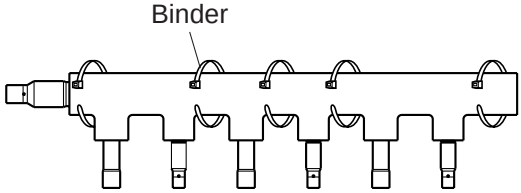

Cover the plugging pipe with heat insulation and seal with tape.

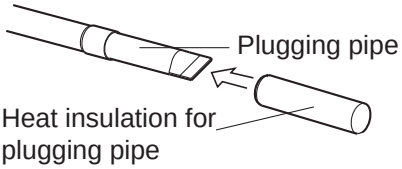

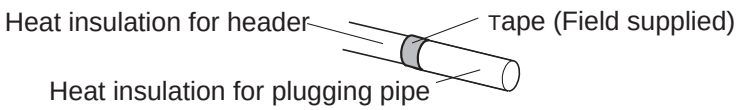

SYSTEM DESIGN

6-3-5. EV KIT

An EV kit must always be required for the compact wall mounted type (Comfort model) on the liquid pipe side.

■ MODELS REQUIRING THE EV KIT

AS✱E07LACF, AS✱E09LACF, AS✱E12LACF, AS✱E14LACF

✱ Select the above indoor unit for use in small and, quiet rooms such as hotel or bedroom, where noise would be a distraction.

✱ The other indoor units, do not require an EV kit.

● EV kit selection

Model name	Application indoor units
UTR-EV09XA	AS*E07LACF AS*E09LACF
UTR-EV14XA	AS*E12LACF AS*E14LACF

✱ The parts of the built-in electronic expansion valve different, so be careful to select the right model.

✱ A wrong selection could cause improper operation.

■ SELECTING THE INSTALLATION LOCATION

✱ A small amount of noise is generated from the operating EV kit, so it should be installed away from the living quarters, such as above the ceiling.

✱ Do not install the unit outdoors.

✱ Install the unit where it can be accessed for servicing or creating an opening for inspections.

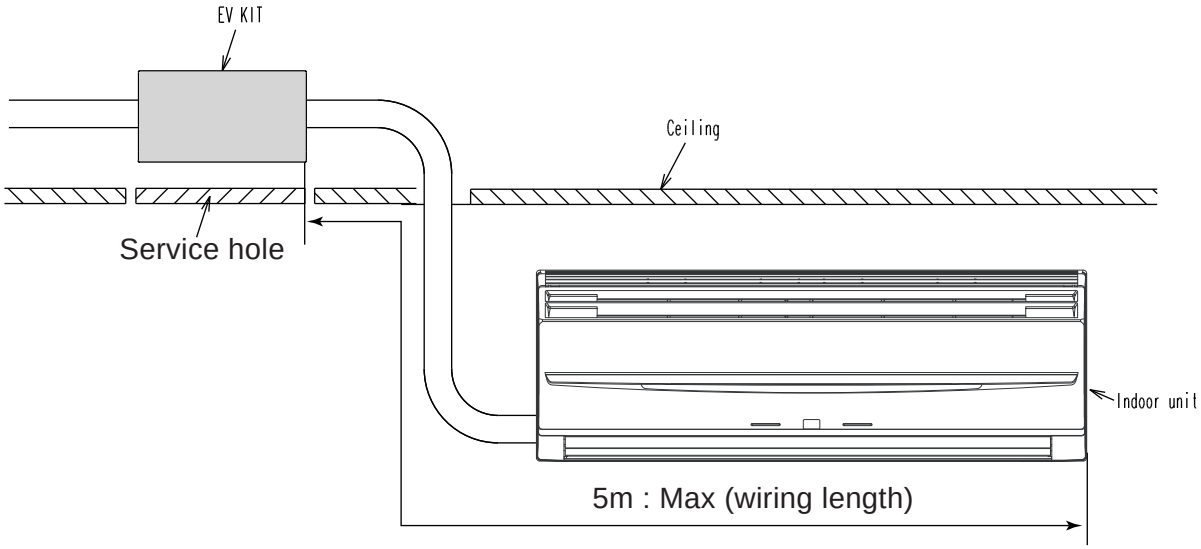

✱ Keep the installed piping and wiring length under 5m.

✱ The piping length might be made shorter than 5 m depending on the installation style.

CAUTION
Do not install EV kit in a location with any of the following conditions. • Outdoor • There is the danger of combustible gas leakage • Near a fire place or other heating appartatus. • There is oily smoke, machine oil (i.e. factory),salty envilopment with direct sea breeze. • There is too much of dust. • Corrosive gas such as sulphurous acid gas is generated. • Not well-ventilated place not avoiding rains and direct sunlight.

SYSTEM DESIGN

Decide the mounting position with the customer as follows:

(1) Install EV kit level on strong wall, floor, ceiling which is not subject to vibration.

(2) Install EV kit where the connection pipe can be easily installed.

(3) Install EV kit where vibration and noise are not amplified.

(4) Take servicing, etc. into consideration and leave the space as follows

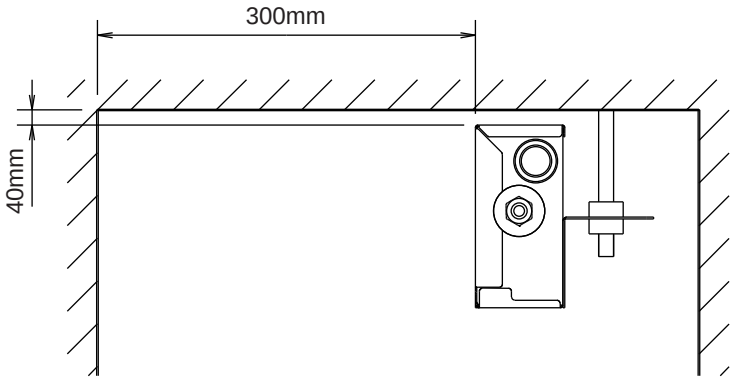

■ INSTALLATION METHOD

CAUTION

The installation direction can be either horizontal (Pattern A) or vertical (Pattern B), but keep the inclination within 5º.

Pattern A

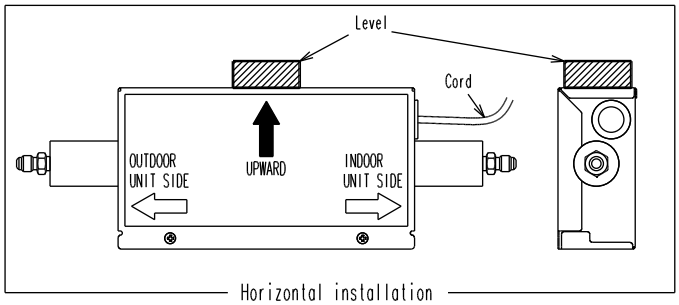

Pattern B

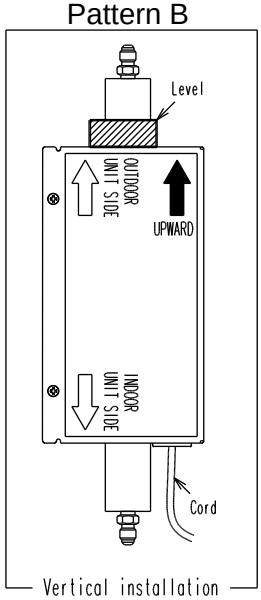

Incorrect installation direction or angle could cause improper operation.

● Suspended installation

(1) Remove the 2 screws (M4x10) and replace them with the hanger.

(2) Use the hanger bolts to fasten the hanger.

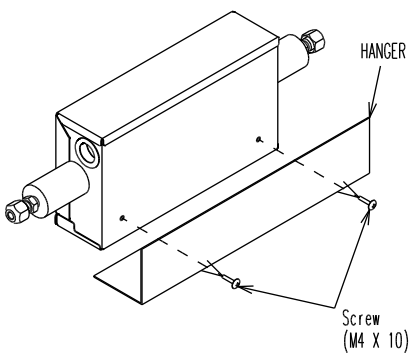

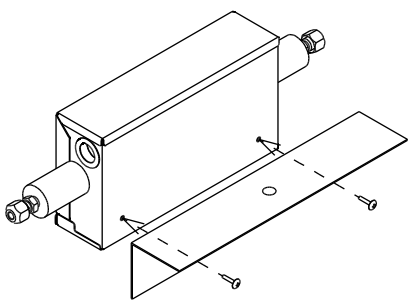

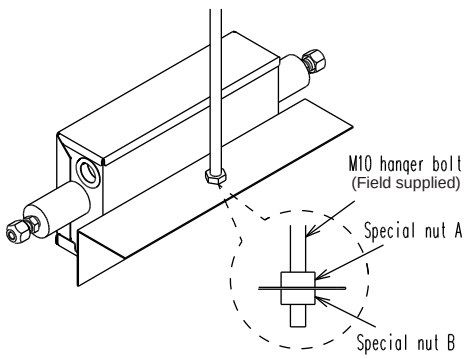

SYSTEM DESIGN

● Floor installation

✳ Use the 4 screws to fasten the unit to the floor.

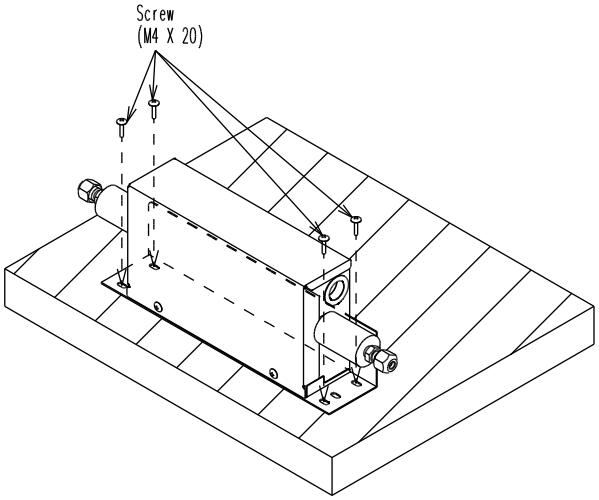

● Wall mounted installation

(1) Remove the 2 screws (M4x10) and replace them with the hanger.

(2) Use the 4 screws (M4x20) to fasten the unit to the wall.

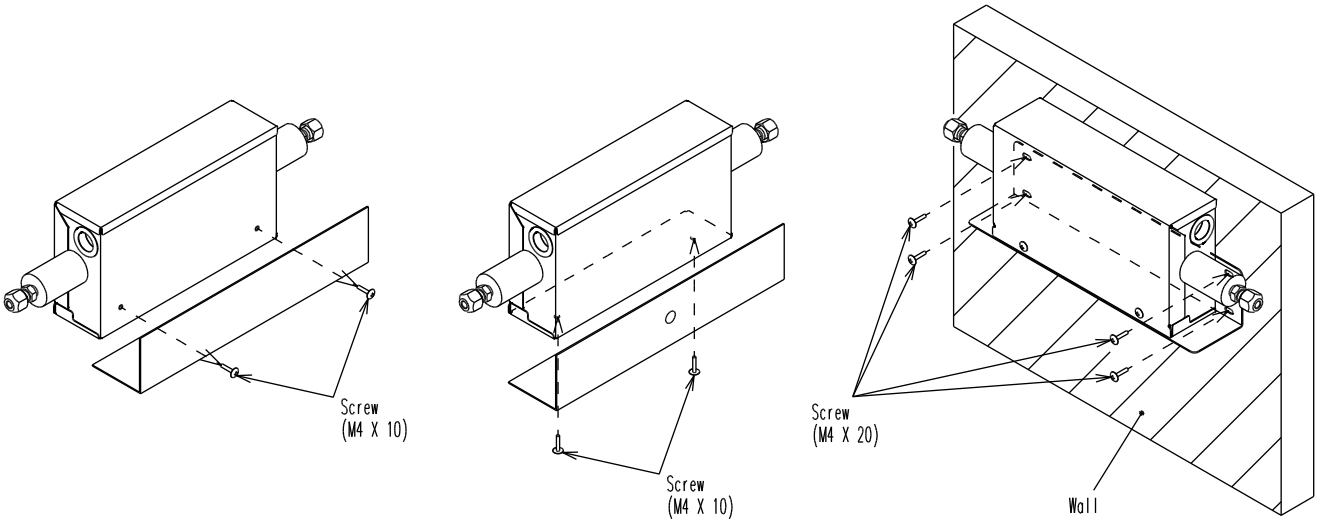

SYSTEM DESIGN

■ CONNECT THE PIPES

✳ Connect EV kit piping to liquid pipe of compact wall mounted (Comfort model) indoor unit.

Pipie size	Indoor unit side	ϕ 6.35mm	Flare connction
	Outdoor unit side	ϕ 6.35mm	

Use a toruque wrench to tighten the flare nut.

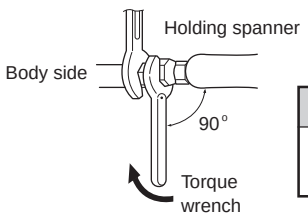

Pipe	Tightening torque
ϕ 6.35 (1/4")	16.0 to 18.0 N•m

■ ATTACH THE INSULATION MATERIAL

Insulate by the coupler heat insulation arround the pipe.

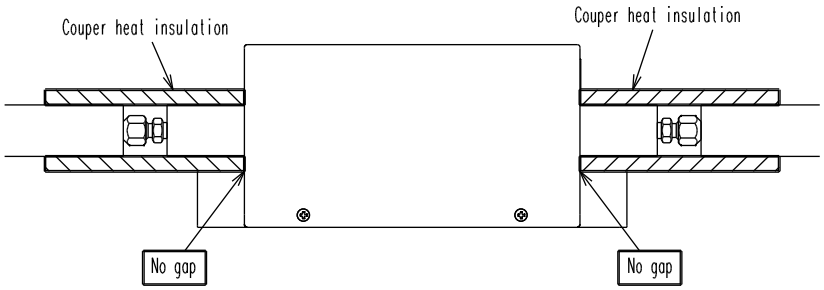

■ WIRING PROCEDURE

(1) Connect the EV kit cord to the indoor unit.

(2) Wrap the tube arround the connection, and fasten both ends binders.

(3) Connect the ground to the indoor unit.

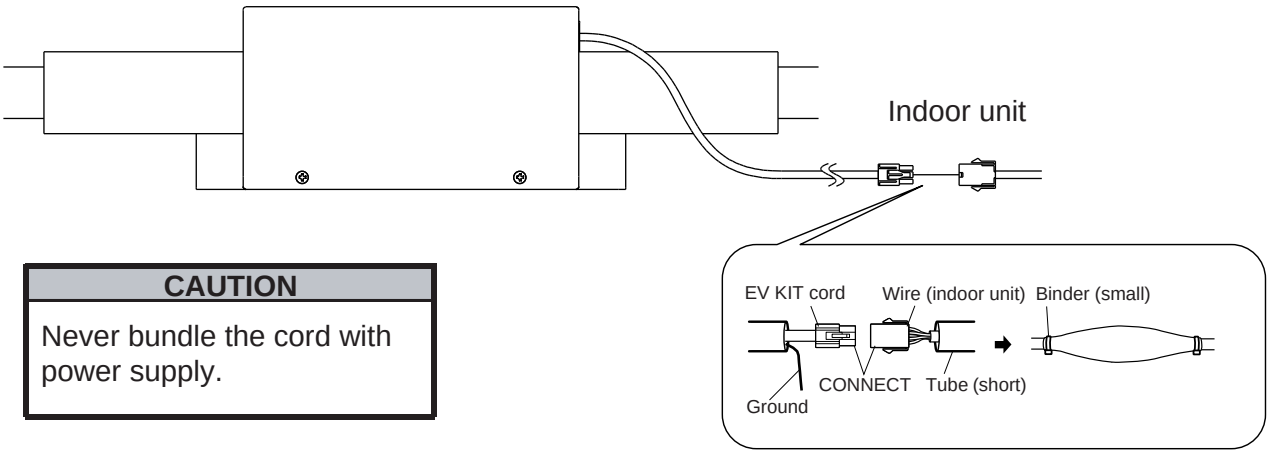

CAUTION
Never bundle the cord with power supply.

■ SPECIFICATIONS

Model name	UTR-EV09XA	UTR-EV14XA
Dimensions (mm) (H x W x D)	121 x 416 x 65	
Weight (g)	1500	
Connection cord length (m)	5	

SYSTEM DESIGN

6-4. WIRING DESIGN

6-4-1. ELECTRICAL WIRING

■ PRECAUTION FOR ELECTRICAL WIRING

Regulation on wire diameter and selecting circuit braker size differ from locality.
Install in accordance with local rules and regulations.

WARNING

1.Do not turn on the power until all installation work is complete.

2.Always install a circuit breaker in the power supply cable for the unit.
Failure to use a circuit breaker could result in electrical shock or fire.

3. Before starting work, check that power is not being supplied to the unit.

4. Connect the connection cable firmly to the terminal board. Imperfect installation may cause a fire.

5. Always fasten the outside covering of the connection cable with the cord clamp.

(If the insulator is chafed, electric leakage may occur.)

6. Always connect the ground wire.

7. Never install a condenser for improving the power factor. (It will not improve the power factor and the condenser will become abnormally hot.)

■ WIRING SYSTEM OUTLINE

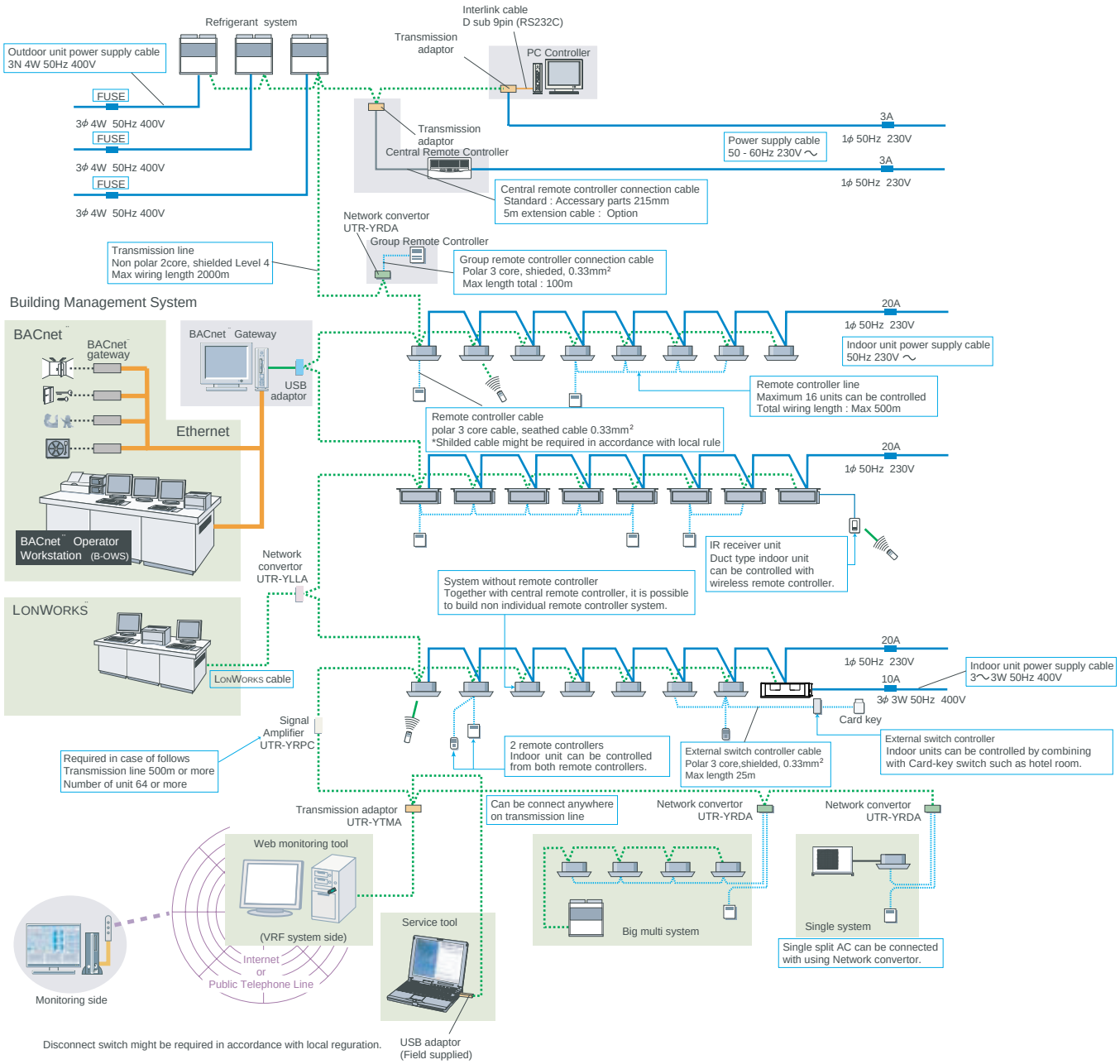

SYSTEM DESIGN

6-4-2. POWER SUPPLY CABLE WIRING

■ POWER SUPPLY CABLE SPECIFICATIONS

Use a separate power supply for the outdoor unit and indoor unit.

● Outdoor unit

Model		Recommended cable size (mm^2)	Fuse capacity(A)	Breaker for leakage current	Remarks
Master Unit	AJ*A72LBTF	6	40	100mA 0.1 sec or less	3N~ 400V 50Hz 4 Wire + ground
	AJ*A90LBTF	6	40		
	AJ*126LBTF	10	63		
Slave Unit	AJ*A72UBTF	6	40		
	AJ*A90UBTF	6	50		
	AJ*126UBTF	10	63		

✱ Select wire size base on the value of MCA and TOCA. In the table of "3-9. ELECTRIC CHARACTERISTICS", example of wiring specification for outdoor unit is given.

✱ Select circuit breaker for outdoor unit based on the value of MFA of "3-9. ELECTRIC CHARACTERISTICS". The breaker should not operate when starting current is generated.

● Indoor unit connection

Model		Recommended cable size (mm^2)	Fuse capacity(A)	Breaker for leakage current	Remarks
ALL models		2.5	20	30mA 0.1 sec or less	230V ~ 50Hz 2 Wire + ground
ARXC90	for PCB	2.5	20		230V ~ 50Hz 2 Wire + ground
	for motor drive	2.5	10		3~ 400V 50Hz 3 Wire + ground

✱ Select cable size base on the value of total MCA of the indoor units connected. and if necessary divided the system which the total MCA of the indoor units connected must be smaller than 15 (A). The indoor units shall be connected up whthin refrigerant system.

✱ In order to be influenced of a breaker stop, please divide a power supply circuit for every refrigerant system.

✱ High Static Pressure Duct Type ARXC90 is required both single phase(for PCB) and 3 phase(for fan motor) power supply. 3 Phase power supply should require the fuse or circuit braker for each unit.

✱ Please attach at least one breaker per refrigerant system.

✱ Select the cable size to keep the voltage drop within 2%.

CAUTION

1. Above "Wire size" and "Fuse capacity" are minimum value.
2. Regulation of wire size and circuit breaker differs from each locality, please refer in accordance with local rules.
3. Specific wiring requirement should be applied Type 245 IEC 57 or equivalent.
4. To prevent the electrical noise malufunction and hazards from insulation failure, the unit should be connected to ground.
5. A disconnect switch may be required for ease of maintenance in accordance with local regulation for each unit. Please check the local rules and regulations. Make the wire length between disconnect switch and unit terminal as short as possible.
6. When connecting the indoor unit power supply from part of a 3-phase power source, recommend to take the power from each phase uniformly to prevent unbalance
7. All field wiring and components must be provided by a licensed electrician.
8. Use copper conductors only.

SYSTEM DESIGN

■ POWER SUPPLY CABLE WIRING

Example 1: Power supply cable wiring.

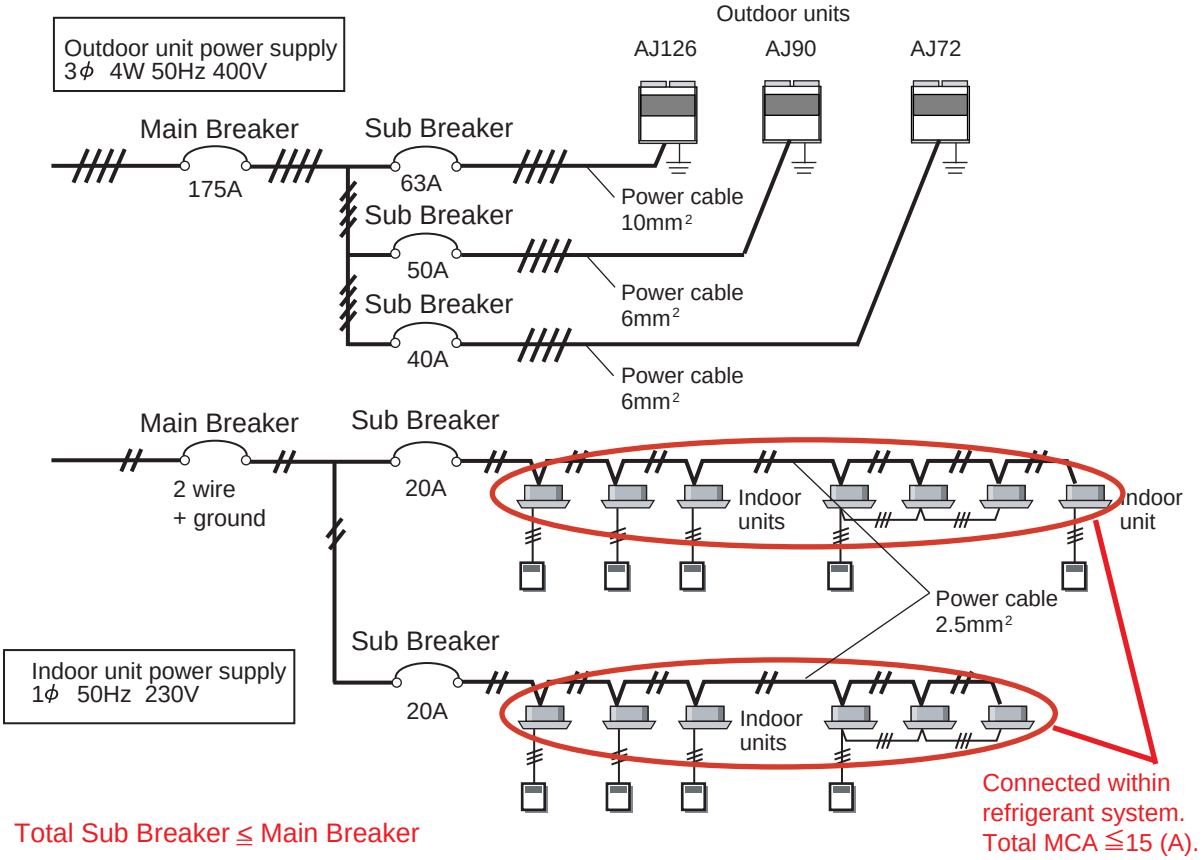

Example 2: Power supply cable wiring. (Using terminal board for indoor units)

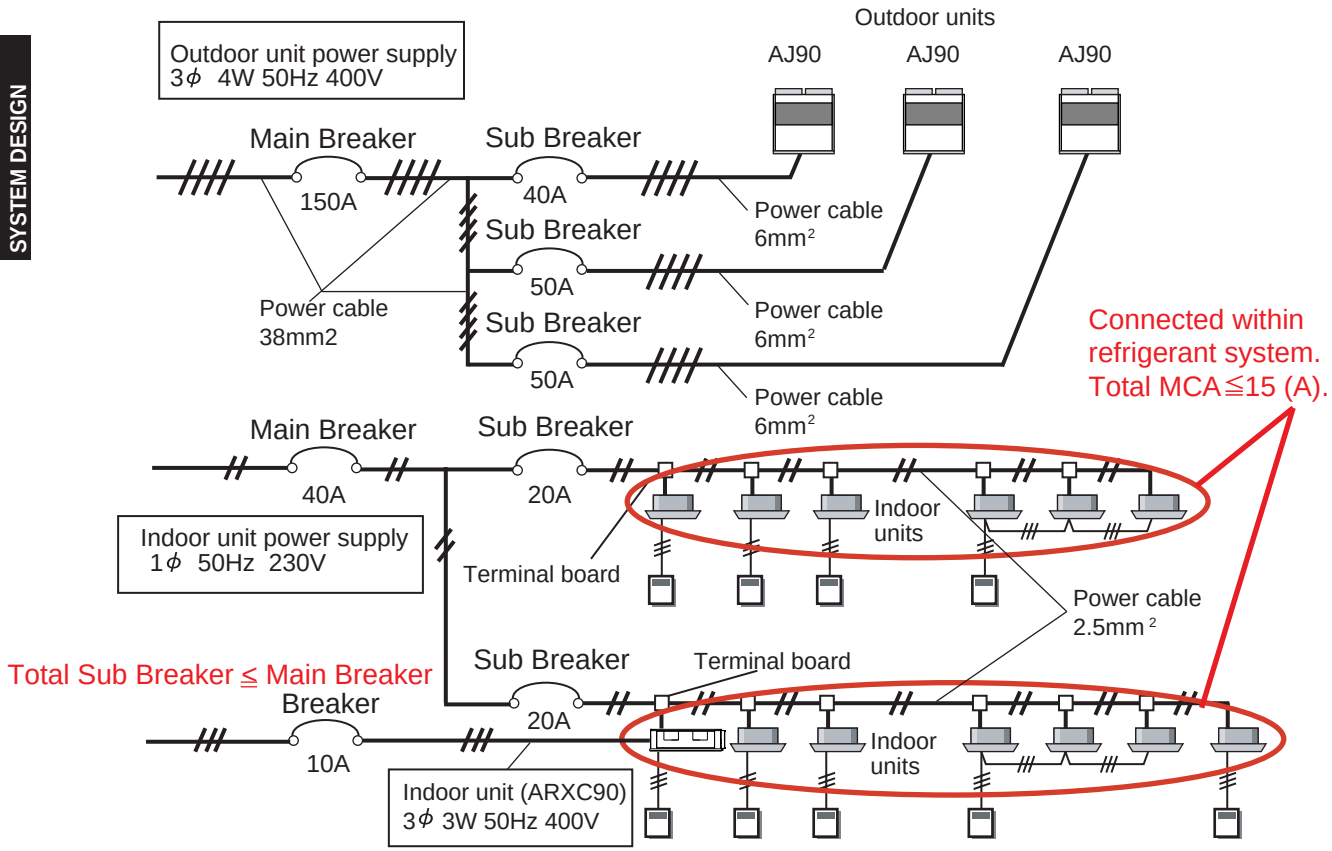

■ CAUTION

✳ Except for EMERGENCY, never turn off main as well as sub breaker of the indoor units during operation.

It will cause compressor failure as well as water leakage.

✳ Before turning off the breaker, stop indoor units with remote controllers first.

6-4-3. TRANSMISSION LINE

■ TRANSMISSION WIRING SPECIFICATIONS

Use	Size	Wire type	Remarks
Transmission cable	0.33mm^2	22AWG LEVEL 4 (NEMA) non-polar 2core, twisted pair solid core diameter 0.65mm	LONWORKS® compatible cable

✳ Use the shielded wire specified and always ground it both end.

[22AWG (0.65mm) Level 4 cable with shielded (National Electrical Manufacturers Association (NEMA)
Differs from the Category 4 specification proposed by the Electronic Industries
Association / Telecommunication Industry Association (EIA/TIA)]

● Reference specifications for transmission cable

NO.	Item		Unit	Specifications
1	Wire type		mm	0.65dia (22AWG) Twisted pair with shield
2	Pair (Twisted pair cable) Note 1		----	1P or 2P
3	Loop DC Resistance (20℃)		Ohm/km	Less than 118
4	DC Resistance Unbalancing (20℃)		%	Less than 5
5	Dielectric Voltage (Between conductor to conductor)		V/min	AC 350
6	Insulation Resistance (20℃) (Between conductor to conductor)		Mohm-km	More than 500 (after charging DC500V 1min.)
7	Static Capacitance between Conductors	1KHz	nF/km	Less than 56
8	Unbalanced Static Capacitance (To Ground)	1KHz	nF/km	Less than 3.28
9	Characteristic Impedance	772KHz	Ohm	102+ - 15% (87 to 117)
		1MHz		100+ - 15% (85 to 115)
		4MHz		100+ - 15% (85 to 115)
		8MHz		100+ - 15% (85 to 115)
		10MHz		100+ - 15% (85 to 115)
		16MHz		100+ - 15% (85 to 115)
		20MHz		100+ - 15% (85 to 115)
10	Attenuation	772KHz	dB/km	Less than 15
		1MHz		Less than 18
		4MHz		Less than 36
		8MHz		Less than 49
		10MHz		Less than 56
		16MHz		Less than 72
		20MHz		Less than 79
11	Cross talk attenuation (Note 2)	772KHz	dB/km	More than 58
		1MHz		More than 56
		4MHz		More than 47
		8MHz		More than 42
		10MHz		More than 41
		16MHz		More than 38
		20MHz		More than 36

NOTE

✳ Number of twist is not specified. However, it shall satisfy the electrical specifications such as characteristic impedance, attenuation, etc. (Example : More than 40times/m)

✳ Cross talk attenuation is applied when the twisted cable has 2 pairs (2P)

✳ Material is not specified. However, it shall be selected by considering the operating environment (Temperature, Humidity), and the local regulation by the environmental condition (ROHS Directive, etc.)

✳ Mechanical specification is not specified. However, it shall be selected by considering the operating environment.

✳ Never bundle transmission cable with power supply cable.

SYSTEM DESIGN

■ WIRING RULES

✳ In the following cases, SIGNAL AMPLIFIER is required.

(1) When the total length of the transmission line exceeded 500 m.
AB+BC+BD+DE+EF > 500 m (Fig. 1)

(2) When the total number of units* is over 64.

✳ Transmission line length between each unit*: MAX 400 m.

✳ Total transmission line length: MAX 2000 m

AB+BC+BD+DE+EF+EG+GH < 2000 m (Fig. 2)

✳ When a SIGNAL AMPLIFIER is installed, network is divided into two network segments. In a network segment (NS), divided by a SIGNAL AMPLIFIER, have to keep the following facts.

(1)Total transmission line length: MAX 500 m

AB+BC+BD < 500 m (Fig. 2)

(2)The total number of units* : MAX 64

(3)The number of terminal resistor : 1

(4)The total number of control units : 2

✳ Arrange so that there is one terminal resistor for each network segment.

✳ Always take a ground from both ends of transmission line.

Fig. 1

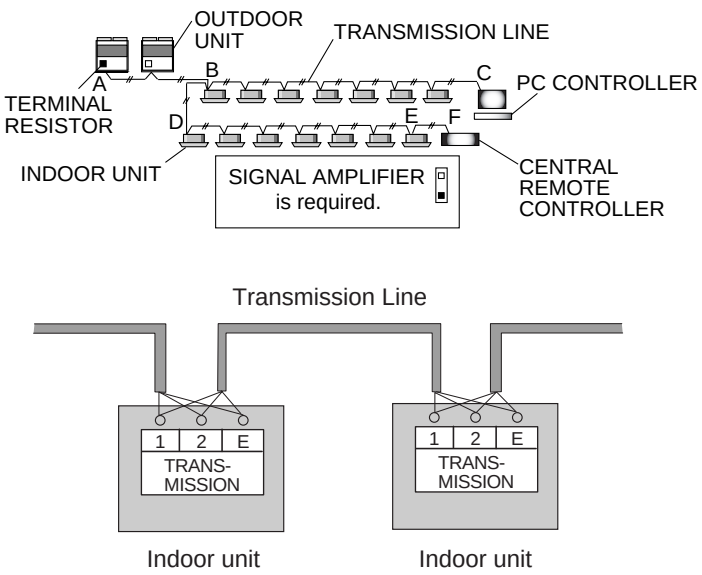

Fig. 2

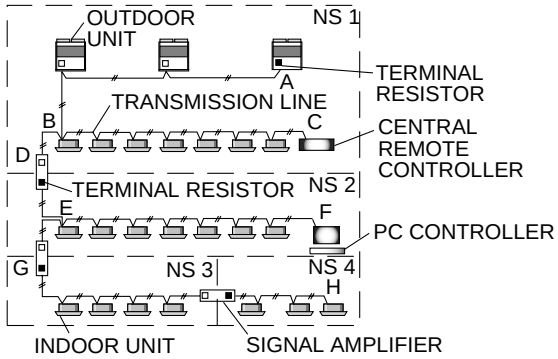

Note : Unit* means indoor unit, outdoor unit, central remote controller (CRC) and PC controller, signal amplifier, single split adaptor, network convertor etc..
Control units means central remote controller and PC controller ant network convertor for LONWORKS.

SYSTEM DESIGN

■ TRANSMISSION LINE SEPARATION RULES

* The transmission line between indoor unit, outdoor unit and controllers can be connected by one cable.
* Terminal board available on the market or the ones inside the indoor unit or outdoor should be used for transmission line separation.
* Connection of three or more lines may cause poor communication for one terminal. In this case, please use a terminal box.

NOTE

· Do not loop.

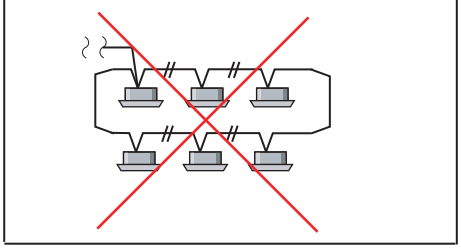

Example 1 : Connecting each outdoor and indoor unit with one connection wiring.

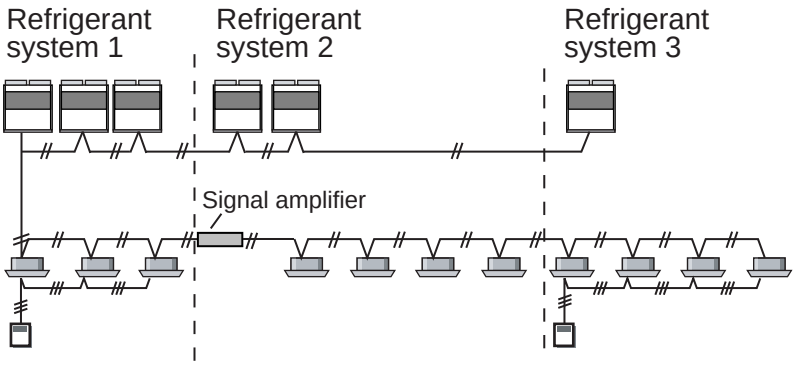

Example 2 : Separating transmission line.

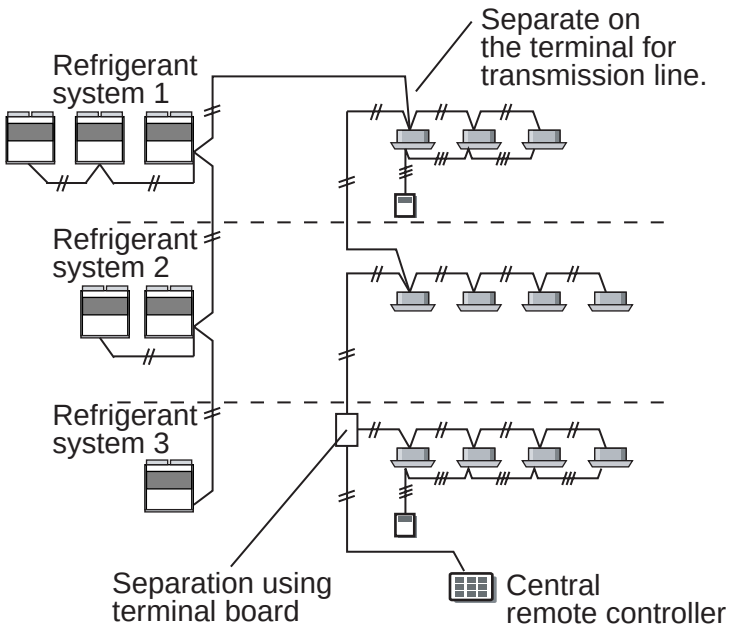

SYSTEM DESIGN

Example 3 : Separation wiring from one terminal board radially.

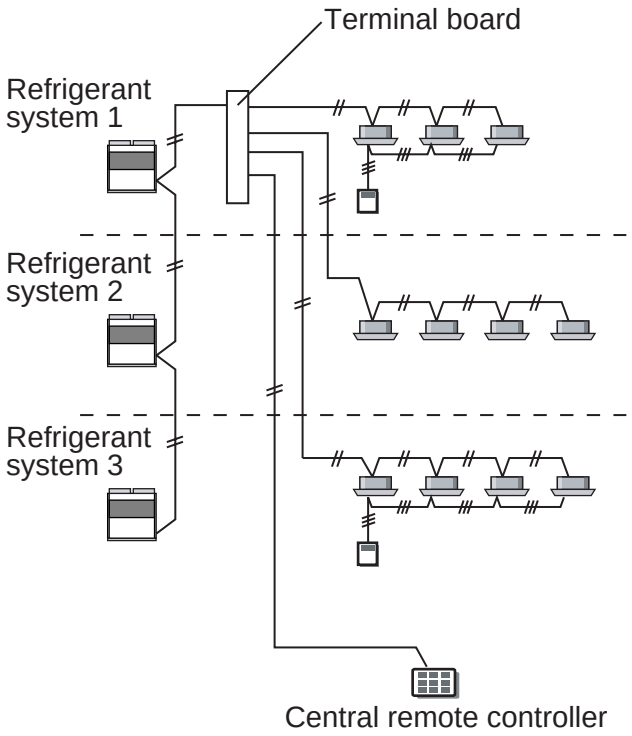

Example 4 : Combination of example 2 and 3

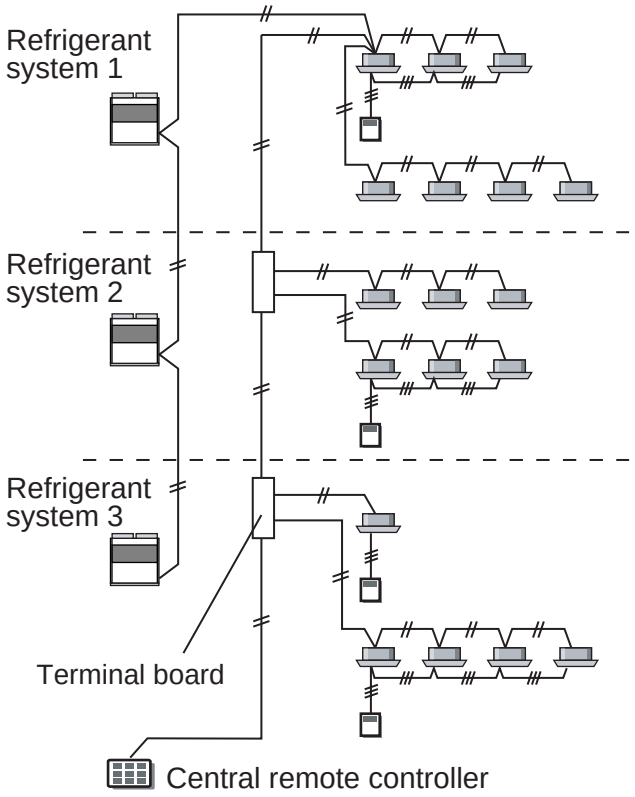

SYSTEM DESIGN

6-4-4. CONTROLLER CABLE WIRING

■WIRING SPECIFICAITIONS

Model type	Connection to	Wire	Size	Specification
PC Controller	Transmission Adaptor	Interlink cable	-	Serial D sub 9pin Interlink
Central Remote Controller	Transmission Adaptor	Connection cable	-	(Standard parts:Attached) Extension cable:Optional
Group Remote Controller	Network Convertor UTR-YRDA	Remote controller cable	0.33 mm^2	Shielded, Polar 3core
Wired Remote Controller	Indoor unit	Remote controller cable	0.33 mm^2	Sheathed PVC cable ✱1 Polar 3core
Simple Remote Controller	Indoor unit			
External switch Controller	Indoor unit	Remote controller cable	0.33 mm^2	Shielded, Polar 3core
	External input		0.33 mm^2	Shielded, Polar 2core, Twisted pair
BACnet® gateway	USB Adaptor	Ethernet		USB 1.1
Network convertor for LONWORKS®	BMS system	LONWORKS® cable	22AWG (0.65mm)	Same as transmission line
IR Receiver unit	Indoor unit	Connection cable	-	(5m cable attached)
Remote sensor	Indoor unit	Connection cable	-	(10m cable attached)
EV Kit	Indoor unit	Connection cable	-	(5m cable attached)

✱1 : Use shielded cable in accordance with local rules for remote controller cable.

CAUTION

✱Install in accordance with local rules and regulations.

✱Never bundle the power supply cable and controller cable together.
Bundling these cords together will cause misoperation.

✱Always ground for shilded cable both end.

✱For detail specification and connection, please refer to "5 Controll system".

✱Controller might be required to connect power supply cable and transmission line.
Use separate connection with other units for power suply cable.

SYSTEM DESIGN

6-5. SYSTEM SETTING

6-5-1. SYSTEM TYPE SETTING

Set the DIP switch to the corresponding system type as shown in the table.
Do not use a nonexistent switch combination.

Note
✳ Perform the system setting and address setting , before turning on the power.
✳ For the air conditioner to operate satisfactorily, perform the correct setting.

■ OUTDOOR UNIT SETTING

(◆ . . . Factory Setting)

System type setting

Set the DIP SW 7-1
Heat pump : SW 7-1 OFF ◆
Cooling only : SW7-1 ON
Setting for Master unit and Slave unit

Set the number of outdoor unit

Set the DIP SW 4-1& 4-2
1 : SW 4-1 OFF, SW 4-2 OFF ◆ Master x 1
2 : SW 4-1 OFF, SW 4-2 ON Master x 1 Slave x 1
3 : SW 4-1 ON , SW 4-2 OFF Mater x 1, Slave x 2
Setting for Master unit Only.

Set the outdoor unit address setting

Set the DIP SW 3-3& 3-4
Master : SW 3-3 OFF, 3-4 OFF ◆
Slave 1 : SW 3-3 OFF, 3-4 ON ◆
Slave 2 : SW 3-3 ON , 3-4 OFF
Setting for Master unit & Slave unit.

Pipe length setting

Set the DIP SW 6-1 & 6-2
Pipe Length S : SW 6-1 OFF, SW 6-2 ON
Standard : SW 6-1 OFF, SW 6-2 OFF ◆
Pipe Length M : SW 6-1 ON , SW 6-2 OFF
Pipe Length L : SW 6-1 ON, SW 6-2 ON
Setting for Master unit Only.

Refrigerant circuit address setting

Set the Rotary SW 8 & 9
See the switch detail for "6-5-2 Address setting"
Setting for Master unit & Slave unit.

Function setting

SYSTEM DESIGN

■ PIPE LENGTH SETTING (OUTDOOR UNIT)

Depending on the pipe length, the set-up of the pipe length switch is required.
SW setting can provide the operation to supplement the loss created by the pipe length.

(◆ . . . Factory Setting)

Pipe length range	Recommended Range of L (m)	SW 6-1	SW 6-2
S	L≦40	OFF	ON
◆ Standard	40 < L ≦ 80	OFF	OFF
M	80 < L ≦ 120	ON	OFF
L	120 < L ≦ 150	ON	ON

✳ Pipe length means the length between master outdoor unit and the farthest indoor unit.

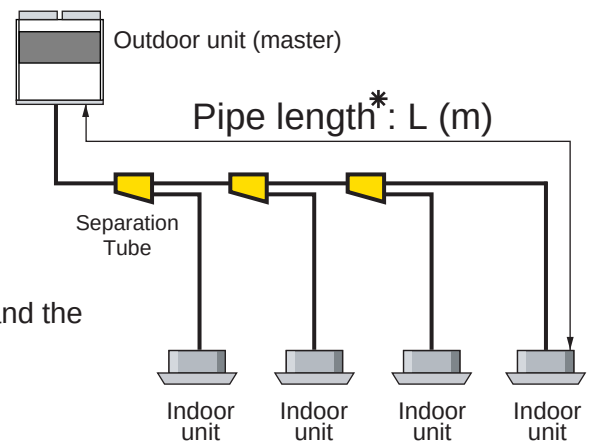

■ INDOOR UNIT SETTING

SW Number shows for other than compact wall mounted type.
Please refer to the correct SW position for 6-6 Function Setting.

(◆ . . . Factory Setting)

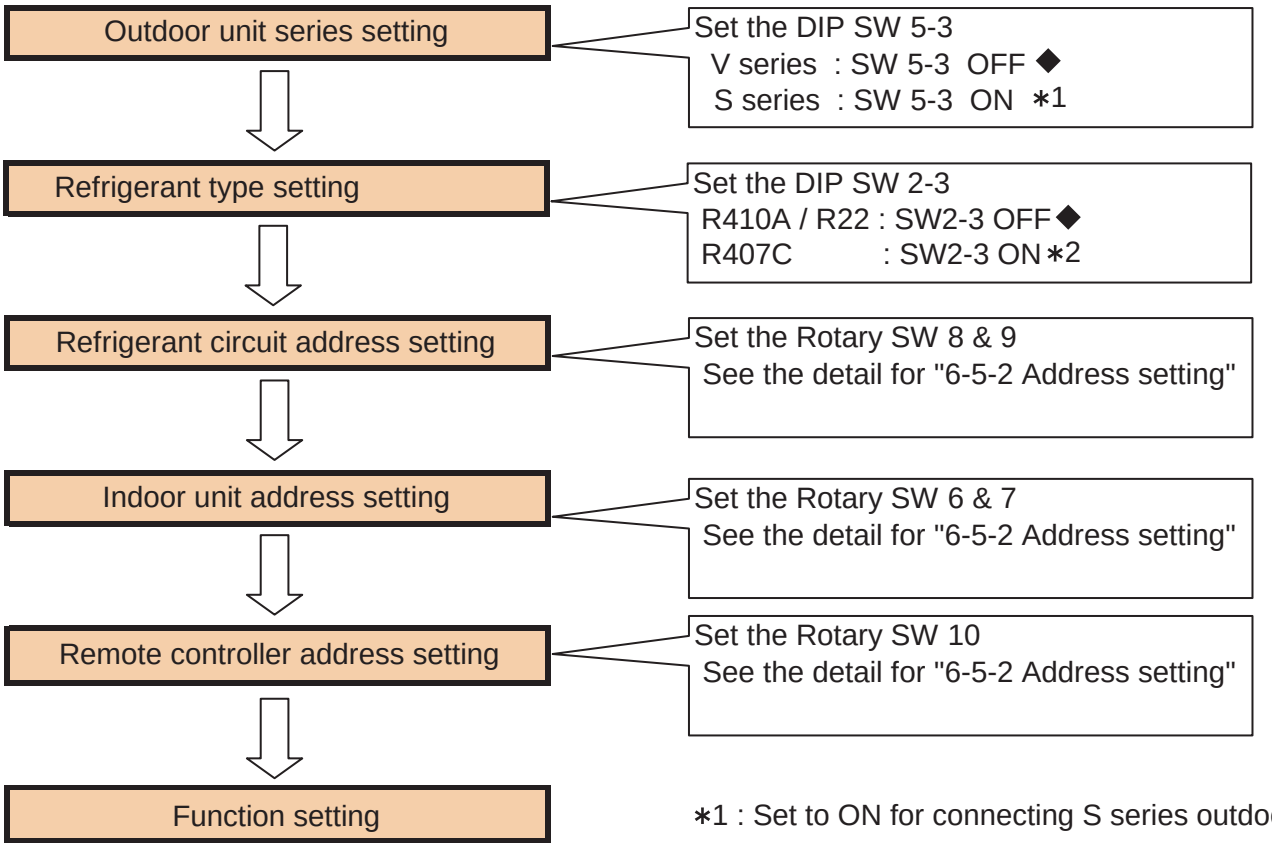

∗1 : Set to ON for connecting S series outdoor unit.

∗2 : Set to ON for connecting R407C outdoor unit.

SYSTEM DESIGN

■ REMOTE CONTROLLER SETTING

WIRED,SIMPLE REMOTE CONTROLLER

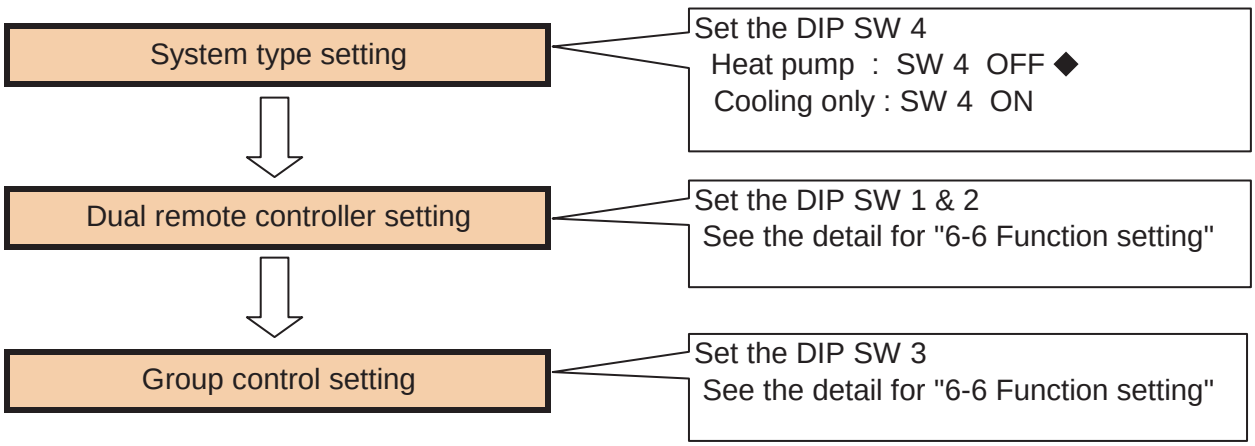

∗Other than above unit , Please refer the "6-6 Function setting " and installation manual.

SYSTEM DESIGN

6-5-2. ADDRESS SETTING

For this system, each address should be preset before operation.
Please refer following table for outdoor unit, indoor unit each remote controller.

■ KINDS OF ADDRESS AND SETTING RANGE

UNIT	SETTING	SETTING RANGE	TYPE OF SWITCH	REMARKS
Outdoor unit	Refrigerant circuit address	0～99	Setting example 0 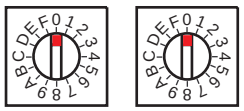 SW 9 SW 8	Arbitrary numbers can be set in range of 00-99
	Outoor unit address	0～2 Master Slave1 Slave2	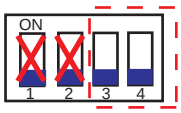 DIP-SW 3	Number of Slave unit set by DIP SW 4-1 DIP SW 4-2 (Master unit only)
Indoor unit	Refrigerant circuit address	0～99	■Manual address setting ● PCB Type A ✳1 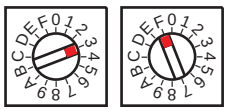 SW 9 SW 8 ● PCB Type B ✳2 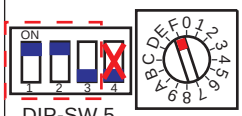 DIP-SW 5 SW 7 ■Infrared address setting After turning on the power, the wireless remote controller can be used to set the address. For details, refer to “6-5-4". Set this switch to 00 at factory shipment.	Arbitrary numbers can be set in range of 00-99
	Indoor unit address	0～63 ✳4	■Manual address setting ● PCB Type A ✳1 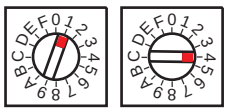 SW 7 SW 6 ● PCB Type B ✳2 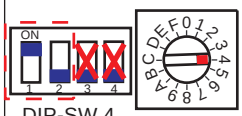 DIP-SW 4 SW 6 ■Infrared address setting After turning on the power, the wireless remote controller can be used to set the address. For details, refer to “6-5-4". Set this switch to 00 at factory shipment.	Arbitrary numbers can be set in range of 00-63 ✳4 See the setting method 6-5-3
	Remote controller address	00～15	● PCB Type A ✳1 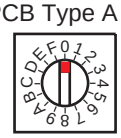 SW 10 ● PCB Type B ✳2 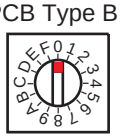 SW 8	Set from 0 to 15 in sequence
Wired, Simple remote controller	Dual remote controller switch	ON/OFF	DIP SW 1,2	OFF : Not terminated ON : Terminated
	Number of indoor unit connection	ON/OFF	DIP SW 3	Number of indoor unit OFF : 1 unit ON : multiple units
Central remote controller	Central remote controller address	0～15	Initial setting	
Group remote controller	Group remote controller address	0～3	Initial setting	

✳1 PCB Type A : Other than compact wall mounted type (Type B)
• Compact Cassette Type • Cassette Type • Compact Duct Type • Low Static Pressure Duct Type
• Duct Type • Floor / Ceiling Type • Ceiling Type • Wall Mounted Type • Ceiling Wall Type

✳2 PCB Type B : Compact Wall Mounted Type (Comfort model) (AS*E07-14)

✳4 Indoor unit address can be set up to 63. However maximum connectable indoor unit is 48 units

SYSTEM DESIGN

■ SETTING EXAMPLE

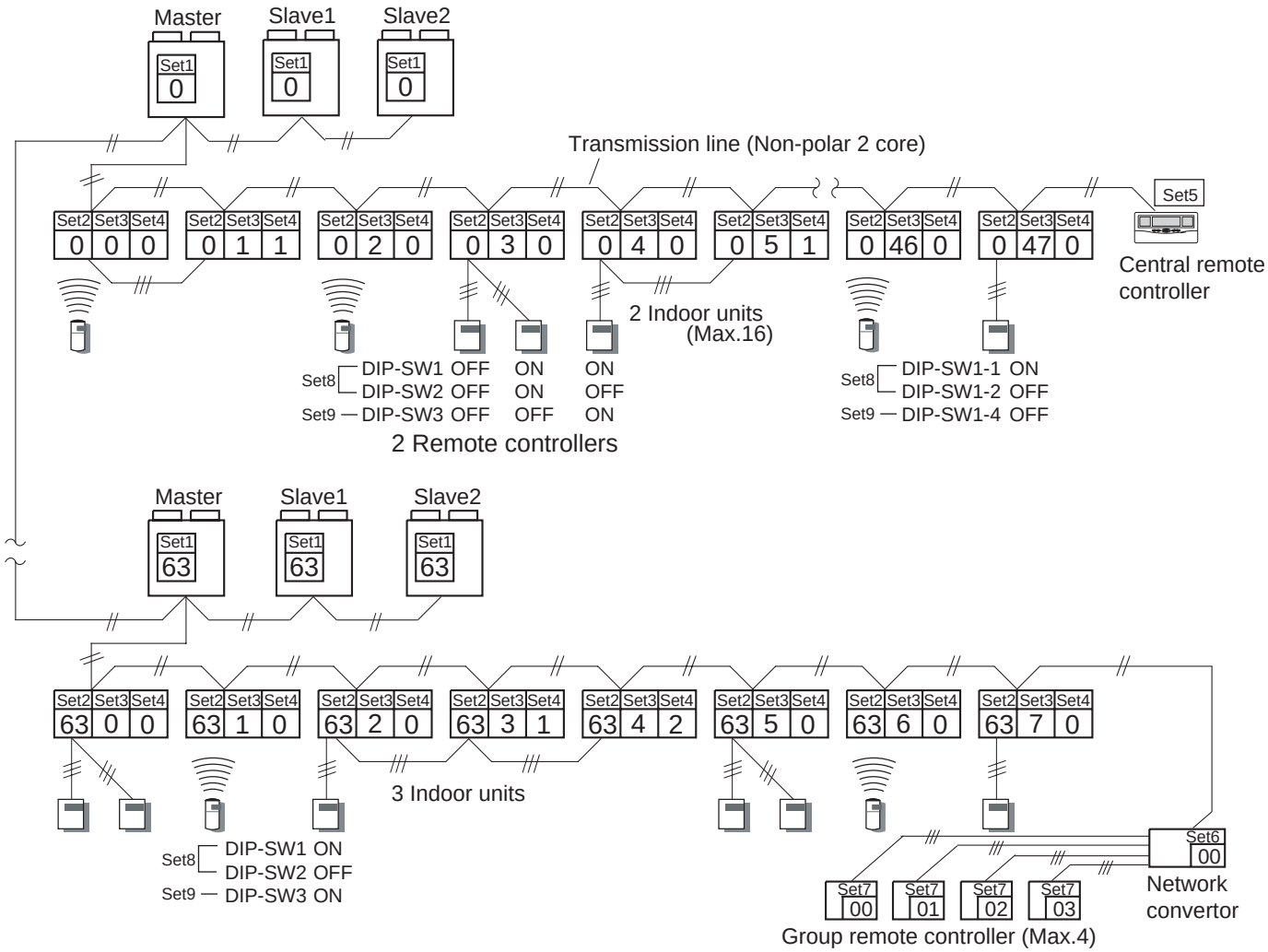

SYSTEM DESIGN

• Outdoor unit setting

Set1: Refrigerant circuit address (Rotary SW9,8)

• Central remote controller setting

Set5: Controller address (Max.16)

• Group remote controller setting

Set7: Controller address (Max.4)

• Wired, Simple remote controller setting

Set8: Dual remote controller (DIP-SW1,2)
Set9: Group control (DIP-SW3)

• Indoor unit setting

Set2 Set3 Set4
63 6 0

Set2: Refrigerant circuit address
Set3: Indoor unit address
Set4: Remote controller address

	Set2		Set3		Set4
	Refrigerant circuit address		Indoor unit address		Remote controller address
	Second digit	First digit	Second digit	First digit	First digit
※1 PCB TYPE A	Rotary SW 9	Rotary SW 8	Rotary SW 7	Rotary SW 6	Rotary SW 10
※2 PCB TYPE B	5-1 DIP-SW 5-2 5-3	Rotary SW 7	DIP-SW 4-1 4-2	Rotary SW 6	Rotary SW 8

※1 : PCB TYPE A : Other than Compact Wall Mounted type (TYPE B & TYPE C)
Compact Cassette type Cassette type Compact Duct type
Low Static Pressure Duct type Duct type Floor/Ceiling type
Ceiling type Wall Mounted type Ceiling Wall type

※2 : PCB TYPE B : Compact Wall Mounted type (comfort model) (AS*E07-14)

※ Instructions for setting up the address

1. The refrigerant circuit address of the indoor and outdoor units can be set to optional numbers in the range of 0 to 99.
2. The Indoor unit address can be set to optional numbers in the range of 0 to 63.
3. Set the remote controller address in the order of 0,1,2, . . . ,15.(Blank is not allowed)
4. The central remote controller address can be set to optional numbers in the range of 0 to 15.
5. The total numbers of indoor units ≦ 48.

6-5-3. MANUAL ADDRESS SETTING METHOD

■ ADDRESS SETTING DESCRIPTION

● Refrigerant circuit address (set 1)

In case of 2 or more refrigerant system in VRF network system, each refrigerant system should be set an exclusive refrigerant circuit address.

Refrigerant system : It means same refrigerant circuit which has connected between outdoor unit and indoor unit by piping.

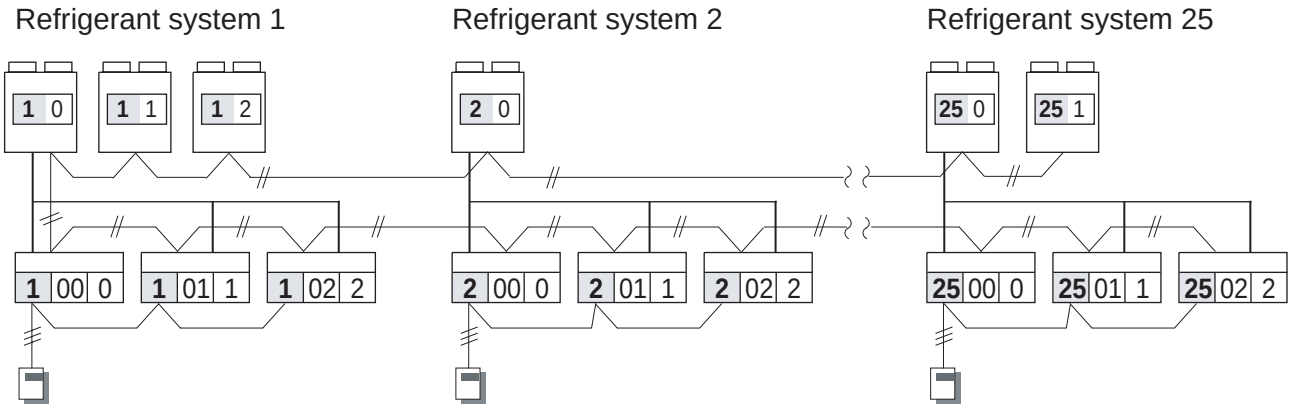

● Example

✳ Outdoor unit

Refrigerant circuit address	SW setting	
	Rotary SW 9	Rotary SW 8
1	0	1
11	0	B
25	1	9
50	3	2

Please refer to the conversion table

✳ Indoor unit

Refrigerant circuit address	PCB TYPE A ✳1		PCB TYPE B ✳2	
	Rotary SW 9	Rotary SW 8	DIP SW 5	Rotary SW 7
1	0	1	OFF OFF OFF	1
11	0	B	OFF OFF OFF	B
25	1	9	ON OFF OFF	9
50	3	2	ON ON OFF	2

Please refer to the conversion table

Setting range 00 - 99(Arbitrary numbers can be set)

All the indoor unit and outdoor unit in same refrigerant circuit should be set same address.

✳1 PCB Type A : Other than compact wall mounted type (Type B)

- Compact Cassette Type
- Cassette Type
- Compact Duct Type
- Low Static Pressure Duct Type
- Duct Type
- Floor / Ceiling Type
- Ceiling Type
- Wall Mounted Type
- Ceiling Wall Type

✳2 PCB Type B : Compact Wall Mounted Type (Comfort model) (AS*E07-14)

SYSTEM DESIGN

SYSTEM DESIGN

● Outdoor unit address (set 2)

Please set the outdoor unit address for each outdoor unit.
Master unit is preset "0" , Slave unit is preset "1" at factory setting.
So that 1 or 2 outdoor units system is not required for the field setting.
In case of 3 outdoor units connected in same refrigerant circuit, set the slave unit which has installed farther from master unit to Slave2 setting "2".

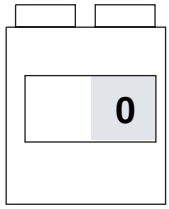

Master

Outdoor unit address **0**

DIP-SW 3-3 OFF
DIP-SW 3-4 OFF

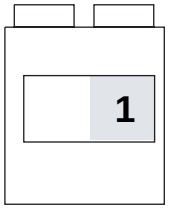

Slave1

1

DIP-SW 3-3 OFF
DIP-SW 3-4 ON

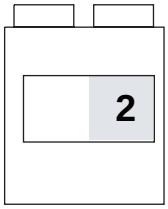

Slave2

2

DIP-SW 3-3 ON
DIP-SW 3-4 OFF

Outdoor unit address		0	1	2
DIP-SW	3-3	OFF	OFF	ON
	3-4	OFF	ON	OFF

● Number of slave unit

(Set at Master unit PCB only)
Please set the number of slave unit on Master unit PCB.

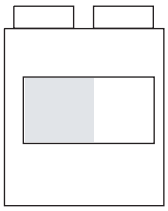

Number of slave unit

0

DIP-SW 4-1 OFF
DIP-SW 4-2 OFF

Master

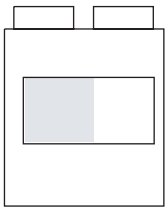

DIP-SW 4-1 OFF
DIP-SW 4-2 ON

Master

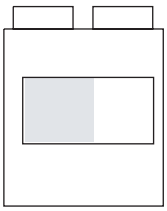

Slave1

Number of slave unit

1

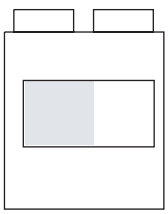

DIP-SW 4-1 ON
DIP-SW 4-2 OFF

Master

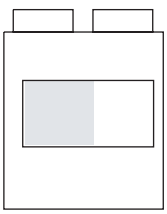

Slave1

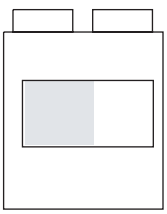

Slave2

Number of slave unit

2

Number of slave unit		0	1	2
DIP-SW	4-1	OFF	OFF	ON
	4-2	OFF	ON	OFF

SYSTEM DESIGN

● Indoor unit address (set 3)

Each indoor unit in same refrigerant system should be set an exclusive indoor unit address.

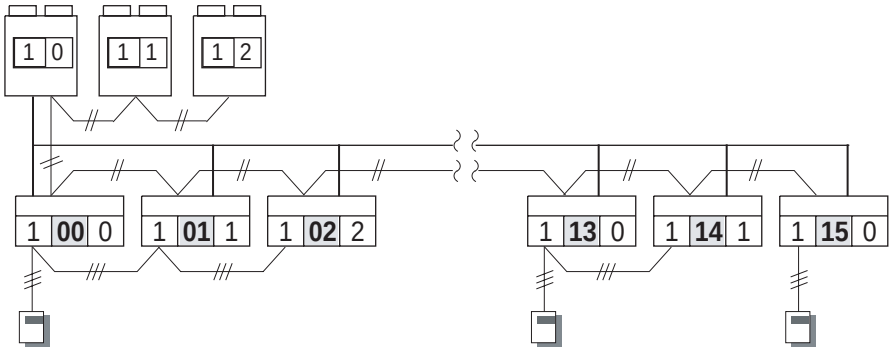

Indoor unit address	PCB TYPE A ✱1		PCB TYPE B ✱2	
	Rotary SW 7	Rotary SW 6	DIP SW 4	Rotary SW 6
3	0	3	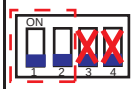 OFF OFF	3
11	0	B	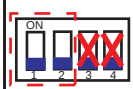 OFF OFF	B
30	1	E	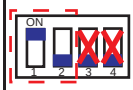 ON OFF	E
47	2	F	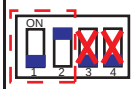 OFF ON	F

Please refer to the conversion table

Setting range 00 - 63(Arbitrary numbers can be set)

Connectable indoor units are maximum 48 units.

✱1 PCB Type A : Other than compact wall mounted type (Type B)

- Compact Cassette Type
- Cassette Type
- Compact Duct Type
- Low Static Pressure Duct Type
- Duct Type
- Floor / Ceiling Type
- Ceiling Type
- Wall Mounted Type
- Ceiling Wall Type

✱2 PCB Type B : Compact Wall Mounted Type (Comfort model) (AS*E07-14)

SYSTEM DESIGN

● Remote controller address (set 4)

1 individual remote controller can be controlled Max.16 indoor unit with connecting remote controller cable.

These units connecting by remote controller cable regards as remote controller group.

Even 1 indoor unit as 1 or no remote controller connection regards 1 remote controller group.

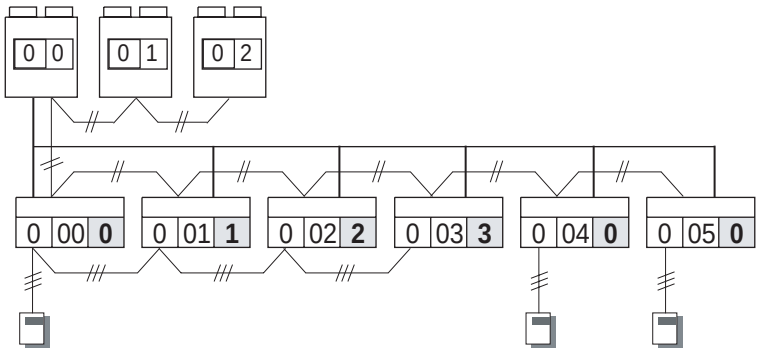

Remote controller address	✱1 PCB TYPE A	✱2 PCB TYPE B
	Rotary SW 10	Rotary SW 8
0	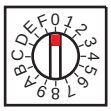 0	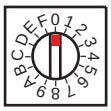 0
1	1	1
11	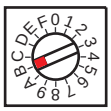 B	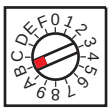 B
15	F	F

✱1 PCB Type A : Other than compact wall mounted type (Type B)

- Compact Cassette Type
- Cassette Type
- Compact Duct Type
- Low Static Pressure Duct Type
- Duct Type
- Floor / Ceiling Type
- Ceiling Type
- Wall Mounted Type
- Ceiling Wall Type

✱2 PCB Type B : Compact Wall Mounted Type (Comfort model) (AS*E07-14)

SYSTEM DESIGN

● Central remote controller address (set 5)

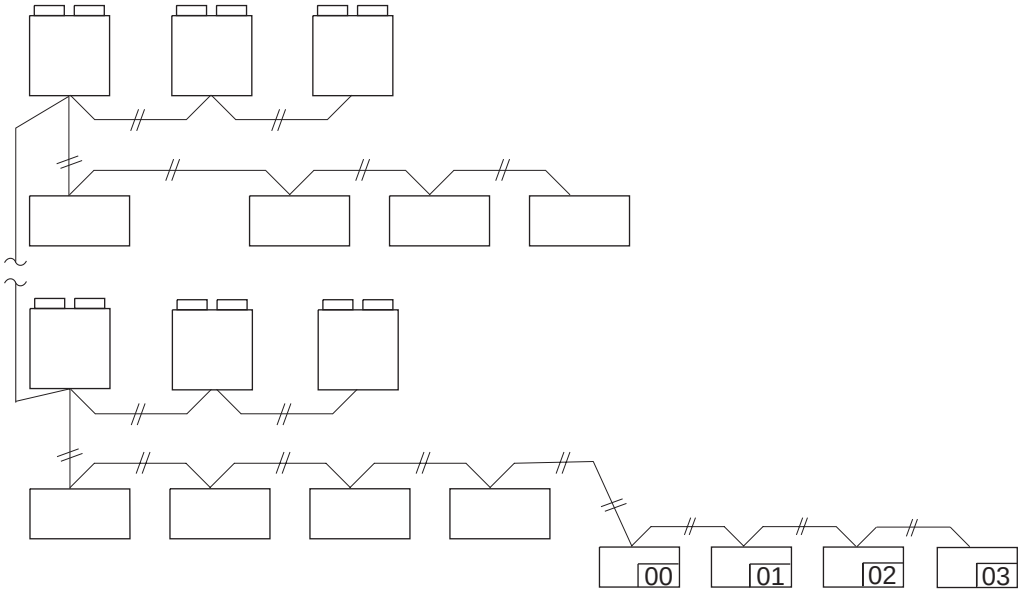

Central remote controller (Max. 16)

✳ Set central remote controller address first, to conduct the initial setting of it.
Refer to the "setting manual" for details.

● Network convertor address (set 6)

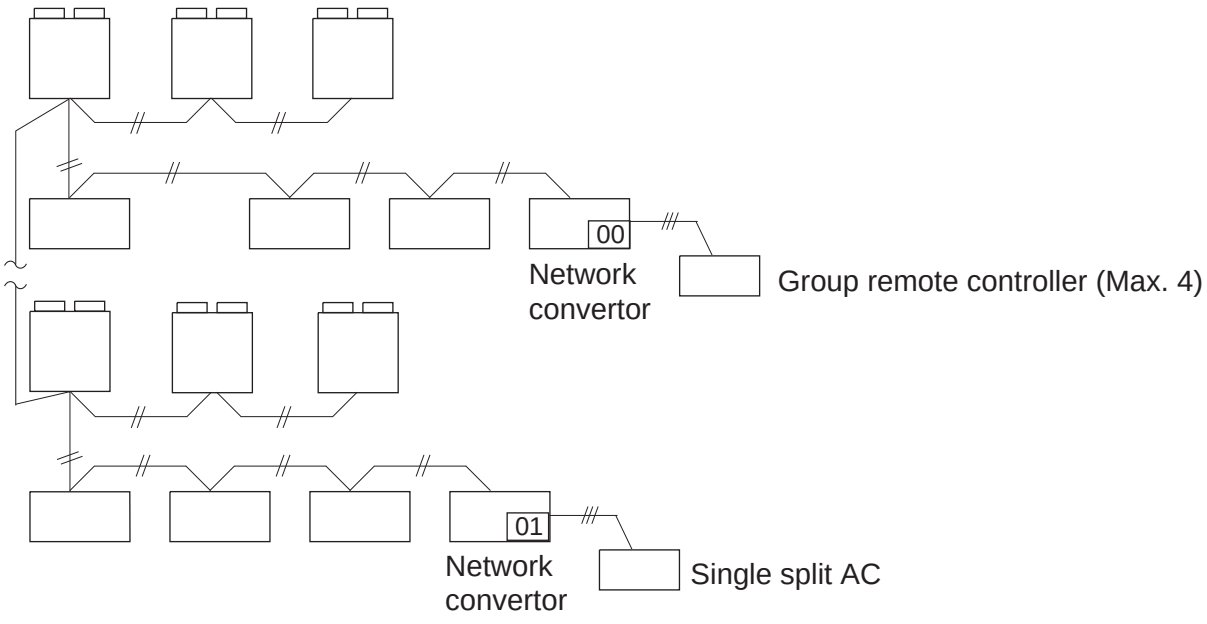

Rotary SW 111

✳ Set the Rotary SW 111 on network convertor PCB.
Refer to the installation manual for details.

SYSTEM DESIGN

● Group remote controller address (set 7)

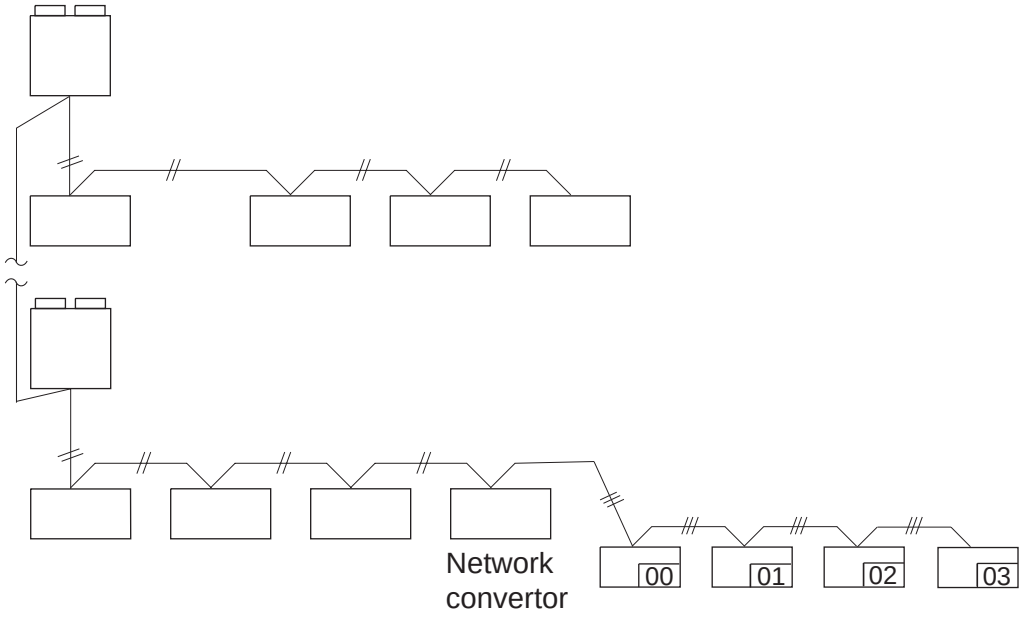

✳ Set group remote controller address first, to conduct the initial setting of it.

● Dual remote controller switch (set 8)

When 2 sets of wired remote controllers are connected to the remote control group, turn the DIP SW 1 and 2 of Master Remote Controller off.

✳ Slave remote controller will not be valid for timer setting.

✳ Last command is priority.

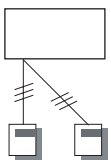

[Master] [Slave]

SW1 OFF ON
SW2 OFF ON

Remote controller unit PCB
Setting by DIP SW 1 and 2

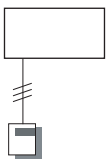

[Master]

SW1 ON
SW2 OFF

When only 1 remote controller will connect, this switch 1 must be set ON.

● Number of indoor unit connection (set 9)

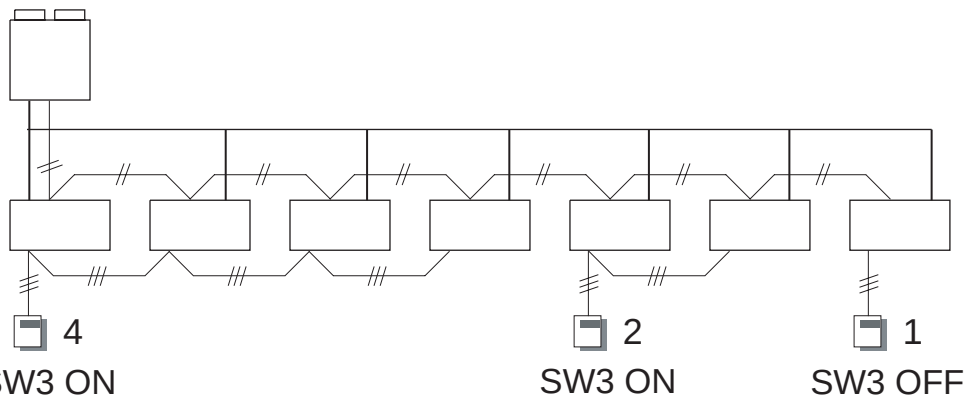

SW3 ON SW3 ON SW3 OFF

Remote controller PCB
Setting by DIP SW 3

SYSTEM DESIGN

■ ADDRESS CONVERSION TABLE FOR MANUAL SETTING

● Refrigerant circuit address

In the case of a multiple refrigerant system, each refrigerant system should be set an exclusive refrigerant circuit address.
Conversion table of refrigerant circuit address and rotary switch setting are shown in the table below.

Do not use a nonexistent switch setting combination.
Rotary SW setting is formed with the Hexadecimal notation.

Refrigerant circuit address conversion table (Outdoor unit)

(SW9 : "0" , SW8 : "0" - - - Factory setting)

Refrigerant circuit address	Rotary Switch setting		Refrigerant circuit address	Rotary Switch setting		Refrigerant circuit address	Rotary Switch setting		Refrigerant circuit address	Rotary Switch setting		Refrigerant circuit address	Rotary Switch setting	
	SW9	SW8		SW9	SW8		SW9	SW8		SW9	SW8		SW9	SW8
0	0	0	20	1	4	40	2	8	60	3	C	80	5	0
1	0	1	21	1	5	41	2	9	61	3	D	81	5	1
2	0	2	22	1	6	42	2	A	62	3	E	82	5	2
3	0	3	23	1	7	43	2	B	63	3	F	83	5	3
4	0	4	24	1	8	44	2	C	64	4	0	84	5	4
5	0	5	25	1	9	45	2	D	65	4	1	85	5	5
6	0	6	26	1	A	46	2	E	66	4	2	86	5	6
7	0	7	27	1	B	47	2	F	67	4	3	87	5	7
8	0	8	28	1	C	48	3	0	68	4	4	88	5	8
9	0	9	29	1	D	49	3	1	69	4	5	89	5	9
10	0	A	30	1	E	50	3	2	70	4	6	90	5	A
11	0	B	31	1	F	51	3	3	71	4	7	91	5	B
12	0	C	32	2	0	52	3	4	72	4	8	92	5	C
13	0	D	33	2	1	53	3	5	73	4	9	93	5	D
14	0	E	34	2	2	54	3	6	74	4	A	94	5	E
15	0	F	35	2	3	55	3	7	75	4	B	95	5	F
16	1	0	36	2	4	56	3	8	76	4	C	96	6	0
17	1	1	37	2	5	57	3	9	77	4	D	97	6	1
18	1	2	38	2	6	58	3	A	78	4	E	98	6	2
19	1	3	39	2	7	59	3	B	79	4	F	99	6	3

Example : Refrigerant circuit address 30 : Set Rotary SW9 to "1" and SW8 to "E"

SW9

SW8

SYSTEM DESIGN

Refrigerant circuit address conversion table (Indoor unit)

✱1 PCB Type A : • Compact Cassette Type • Cassette Type • Compact Duct Type
• Low Static Pressure Duct Type • Duct Type • Floor / Ceiling Type
• Ceiling Type • Wall Mounted Type • Ceiling Wall Type

(SW9 : "0" , SW8 : "0" - - - Factory setting)

Refrigerant circuit address	Rotary Switch setting		Refrigerant circuit address	Rotary Switch setting		Refrigerant circuit address	Rotary Switch setting		Refrigerant circuit address	Rotary Switch setting		Refrigerant circuit address	Rotary Switch setting	
	SW9	SW8		SW9	SW8		SW9	SW8		SW9	SW8		SW9	SW8
0	0	0	20	1	4	40	2	8	60	3	C	80	5	0
1	0	1	21	1	5	41	2	9	61	3	D	81	5	1
2	0	2	22	1	6	42	2	A	62	3	E	82	5	2
3	0	3	23	1	7	43	2	B	63	3	F	83	5	3
4	0	4	24	1	8	44	2	C	64	4	0	84	5	4
5	0	5	25	1	9	45	2	D	65	4	1	85	5	5
6	0	6	26	1	A	46	2	E	66	4	2	86	5	6
7	0	7	27	1	B	47	2	F	67	4	3	87	5	7
8	0	8	28	1	C	48	3	0	68	4	4	88	5	8
9	0	9	29	1	D	49	3	1	69	4	5	89	5	9
10	0	A	30	1	E	50	3	2	70	4	6	90	5	A
11	0	B	31	1	F	51	3	3	71	4	7	91	5	B
12	0	C	32	2	0	52	3	4	72	4	8	92	5	C
13	0	D	33	2	1	53	3	5	73	4	9	93	5	D
14	0	E	34	2	2	54	3	6	74	4	A	94	5	E
15	0	F	35	2	3	55	3	7	75	4	B	95	5	F
16	1	0	36	2	4	56	3	8	76	4	C	96	6	0
17	1	1	37	2	5	57	3	9	77	4	D	97	6	1
18	1	2	38	2	6	58	3	A	78	4	E	98	6	2
19	1	3	39	2	7	59	3	B	79	4	F	99	6	3

Example : Refrigerant circuit address 30 : Set Rotary SW9 to "1" and SW8 to "E"

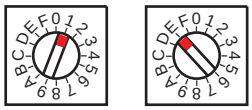

SW9 SW8

SYSTEM DESIGN

Refrigerant circuit address conversion table (Indoor unit)

✱2 PCB Type B : Compact Wall Mounted Type (Comfort model)
AS*E07, AS*E09, AS*E12, AS*E14

(SW5-1: "OFF" , SW5-2: "OFF", SW5-3: "OFF" ,SW7: "0" --- Factory setting)

Refrig-erant circuit address	DIP-SW			Rotary SW SW7	Refrig-erant circuit address	DIP-SW			Rotary SW SW7	Refrig-erant circuit address	DIP-SW			Rotary SW SW7	Refrig-erant circuit address	DIP-SW			Rotary SW SW7
	5-1	5-2	5-3			5-1	5-2	5-3			5-1	5-2	5-3			5-1	5-2	5-3	
0	OFF	OFF	OFF	0	25	ON	OFF	OFF	9	50	ON	ON	OFF	2	75	OFF	OFF	ON	B
1	OFF	OFF	OFF	1	26	ON	OFF	OFF	A	51	ON	ON	OFF	3	76	OFF	OFF	ON	C
2	OFF	OFF	OFF	2	27	ON	OFF	OFF	B	52	ON	ON	OFF	4	77	OFF	OFF	ON	D
3	OFF	OFF	OFF	3	28	ON	OFF	OFF	C	53	ON	ON	OFF	5	78	OFF	OFF	ON	E
4	OFF	OFF	OFF	4	29	ON	OFF	OFF	D	54	ON	ON	OFF	6	79	OFF	OFF	ON	F
5	OFF	OFF	OFF	5	30	ON	OFF	OFF	E	55	ON	ON	OFF	7	80	ON	OFF	ON	0
6	OFF	OFF	OFF	6	31	ON	OFF	OFF	F	56	ON	ON	OFF	8	81	ON	OFF	ON	1
7	OFF	OFF	OFF	7	32	OFF	ON	OFF	0	57	ON	ON	OFF	9	82	ON	OFF	ON	2
8	OFF	OFF	OFF	8	33	OFF	ON	OFF	1	58	ON	ON	OFF	A	83	ON	OFF	ON	3
9	OFF	OFF	OFF	9	34	OFF	ON	OFF	2	59	ON	ON	OFF	B	84	ON	OFF	ON	4
10	OFF	OFF	OFF	A	35	OFF	ON	OFF	3	60	ON	ON	OFF	C	85	ON	OFF	ON	5
11	OFF	OFF	OFF	B	36	OFF	ON	OFF	4	61	ON	ON	OFF	D	86	ON	OFF	ON	6
12	OFF	OFF	OFF	C	37	OFF	ON	OFF	5	62	ON	ON	OFF	E	87	ON	OFF	ON	7
13	OFF	OFF	OFF	D	38	OFF	ON	OFF	6	63	ON	ON	OFF	F	88	ON	OFF	ON	8
14	OFF	OFF	OFF	E	39	OFF	ON	OFF	7	64	OFF	OFF	ON	0	89	ON	OFF	ON	9
15	OFF	OFF	OFF	F	40	OFF	ON	OFF	8	65	OFF	OFF	ON	1	90	ON	OFF	ON	A
16	ON	OFF	OFF	0	41	OFF	ON	OFF	9	66	OFF	OFF	ON	2	91	ON	OFF	ON	B
17	ON	OFF	OFF	1	42	OFF	ON	OFF	A	67	OFF	OFF	ON	3	92	ON	OFF	ON	C
18	ON	OFF	OFF	2	43	OFF	ON	OFF	B	68	OFF	OFF	ON	4	93	ON	OFF	ON	D
19	ON	OFF	OFF	3	44	OFF	ON	OFF	C	69	OFF	OFF	ON	5	94	ON	OFF	ON	E
20	ON	OFF	OFF	4	45	OFF	ON	OFF	D	70	OFF	OFF	ON	6	95	ON	OFF	ON	F
21	ON	OFF	OFF	5	46	OFF	ON	OFF	E	71	OFF	OFF	ON	7	96	OFF	ON	ON	0
22	ON	OFF	OFF	6	47	OFF	ON	OFF	F	72	OFF	OFF	ON	8	97	OFF	ON	ON	1
23	ON	OFF	OFF	7	48	ON	ON	OFF	0	73	OFF	OFF	ON	9	98	OFF	ON	ON	2
24	ON	OFF	OFF	8	49	ON	ON	OFF	1	74	OFF	OFF	ON	A	99	OFF	ON	ON	3

Example : Refrigerant circuit address 30 : Set DIP-SW5-1 to "ON" ,5-2 and 5-3 to "OFF", Rotary SW7 to "E"

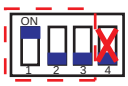

DIP-SW5

SW7

SYSTEM DESIGN

● Indoor unit address

Each indoor unit in a refrigerant system should be set an exclusive indoor unit address with rotary switches or DIP switches.

Conversion table of indoor unit address and rotary switch setting are shown in the table below.

Do not use a nonexistent switch setting combination.

Rotary SW setting is formed with the Hexadecimal notation

Indoor unit address conversion table

✳1 PCB Type A : • Compact Cassette Type • Cassette Type • Compact Duct Type • Low Static Pressure Duct Type • Duct Type • Floor / Ceiling Type • Ceiling Type • Wall Mounted Type • Ceiling Wall Type

(SW7 : "0" , SW6 : "0" - - - Factory setting)

Indoor unit address	Rotary Switch setting		Indoor unit address	Rotary Switch setting		Indoor unit address	Rotary Switch setting		Indoor unit address	Rotary Switch setting		Indoor unit address	Rotary Switch setting	
	SW7	SW6		SW7	SW6		SW7	SW6		SW7	SW6		SW7	SW6
0	0	0	13	0	D	26	1	A	39	2	7	52	3	4
1	0	1	14	0	E	27	1	B	40	2	8	53	3	5
2	0	2	15	0	F	28	1	C	41	2	9	54	3	6
3	0	3	16	1	0	29	1	D	42	2	A	55	3	7
4	0	4	17	1	1	30	1	E	43	2	B	56	3	8
5	0	5	18	1	2	31	1	F	44	2	C	57	3	9
6	0	6	19	1	3	32	2	0	45	2	D	58	3	A
7	0	7	20	1	4	33	2	1	46	2	E	59	3	B
8	0	8	21	1	5	34	2	2	47	2	F	60	3	C
9	0	9	22	1	6	35	2	3	48	3	0	61	3	D
10	0	A	23	1	7	36	2	4	49	3	1	62	3	E
11	0	B	24	1	8	37	2	5	50	3	2	63	3	F
12	0	C	25	1	9	38	2	6	51	3	3			

Example : Indoor unit address 47 : Set Rotary SW7 to "2" and SW6 to "F"

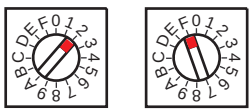

SW7 SW6

SYSTEM DESIGN

Indoor unit address conversion table

✱2 PCB Type B : Compact Wall Mounted Type (Comfort model)

AS*E07, AS*E09, AS*E12, AS*E14

(SW4-1: "OFF" , SW4-2: "OFF", SW6: "0" --- Factory setting)

Indoor unit address	DIP-SW		Rotary SW SW6	Indoor unit address	DIP-SW		Rotary SW SW6	Indoor unit address	DIP-SW		Rotary SW SW6	Indoor unit address	DIP-SW		Rotary SW SW6
	4-1	4-2			4-1	4-2			4-1	4-2			4-1	4-2	
0	OFF	OFF	0	16	ON	OFF	0	32	OFF	ON	0	48	ON	ON	0
1	OFF	OFF	1	17	ON	OFF	1	33	OFF	ON	1	49	ON	ON	1
2	OFF	OFF	2	18	ON	OFF	2	34	OFF	ON	2	50	ON	ON	2
3	OFF	OFF	3	19	ON	OFF	3	35	OFF	ON	3	51	ON	ON	3
4	OFF	OFF	4	20	ON	OFF	4	36	OFF	ON	4	52	ON	ON	4
5	OFF	OFF	5	21	ON	OFF	5	37	OFF	ON	5	53	ON	ON	5
6	OFF	OFF	6	22	ON	OFF	6	38	OFF	ON	6	54	ON	ON	6
7	OFF	OFF	7	23	ON	OFF	7	39	OFF	ON	7	55	ON	ON	7
8	OFF	OFF	8	24	ON	OFF	8	40	OFF	ON	8	56	ON	ON	8
9	OFF	OFF	9	25	ON	OFF	9	41	OFF	ON	9	57	ON	ON	9
10	OFF	OFF	A	26	ON	OFF	A	42	OFF	ON	A	58	ON	ON	A
11	OFF	OFF	B	27	ON	OFF	B	43	OFF	ON	B	59	ON	ON	B
12	OFF	OFF	C	28	ON	OFF	C	44	OFF	ON	C	60	ON	ON	C
13	OFF	OFF	D	29	ON	OFF	D	45	OFF	ON	D	61	ON	ON	D
14	OFF	OFF	E	30	ON	OFF	E	46	OFF	ON	E	62	ON	ON	E
15	OFF	OFF	F	31	ON	OFF	F	47	OFF	ON	F	63	ON	ON	F

Example : Indoor unit address 47 : Set DIP-SW4-1 to "OFF" ,4-2 to "ON", Rotary SW6 to "F"

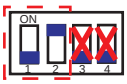

DIP-SW4

SW6

SYSTEM DESIGN

6-5-4. INFRARED ADDRESS SETTING

* A wireless remote controller (UTB- *VB) is required to set the infrared address setting.
* This function is available in all indoor unit with infrared signal receiver.
* Infrared address setting for duct type models can be made possible by using the optional IR receiver unit (UTB-*WA).

  Note : Since Beeping sound generate from indoor unit PCB installed far away (not from IR Receiver unit), sound might not be heard.

* The indoor unit's refrigerant circuit address and indoor unit address can be set using the infrared address setting.
* When remote controller address setting is required, set by the rotary switch on the indoor unit's PCB.

■ PREPARATION FOR INFRARED ADDRESS SETTING

(1) Set the switch on the indoor unit's PCB that is used for manual address setting is set to "00" at factory setting.

(This process is unnecessary for newly installed and not yet set the SW.)

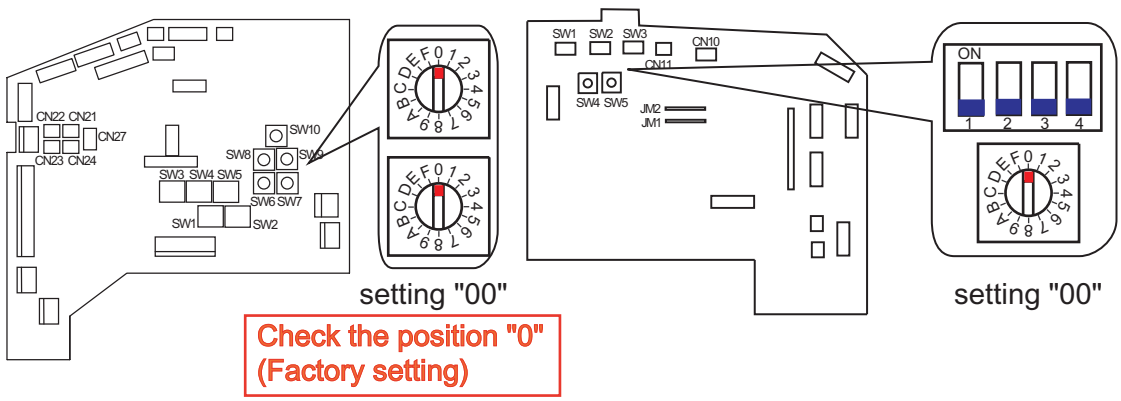

* If it is set to any other numbers, that setting value will be enabled.

(2) Turn on the power to the indoor unit.

* By turning on the power indoor units initializes EEV, so make sure the piping air-tight test and vacuuming have been conducted before turning on the power.
* Also check again to make sure no wiring mistakes were made before turning on the power.

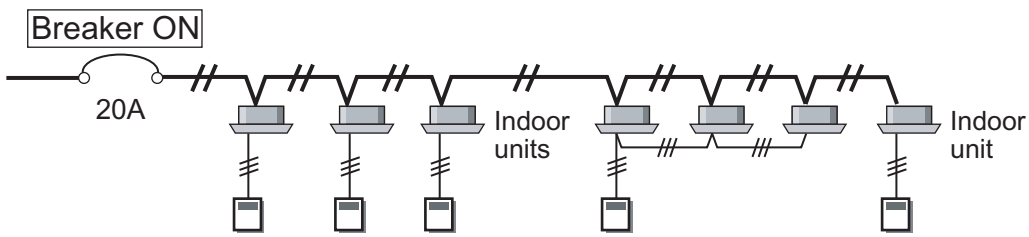

SYSTEM DESIGN

SYSTEM DESIGN

■ SWITCHING SELECTION OF ADDRESS SETTING MODE

(3) Press and hold the “MANUAL/AUTO” button for 3 seconds.

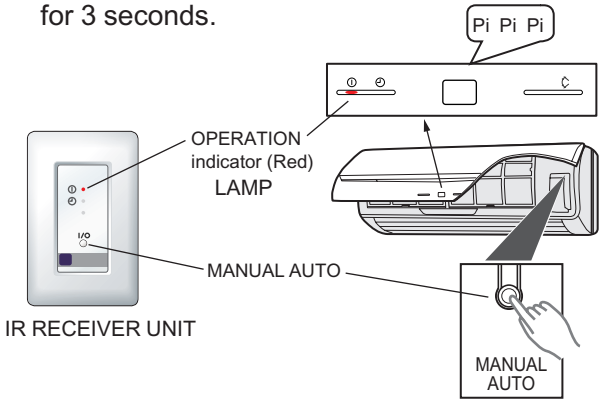

(4) Press and hold the “FAN CONTROL ” and the “+” buttons. Whilst holding these 2 buttons, press the "ACL" button.

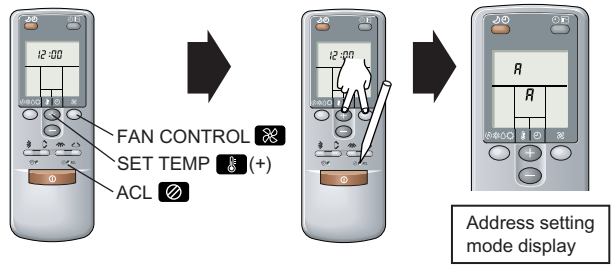

✱ The position of the “MANUAL/AUTO” button varies depending on the model. Refer to the operation manual for the position that is included with the unit.

✱ The error will be displayed by continuosly pressing the "MANUAL/AUTO" for 10 sec or more. In this case release the button or turn off the power.

✱ When the address has already been set in the circuit board, the operation LAMP will light up and the TIMER and SWING LAMPs will display the number of setting address.

✱ An explanation of the displayed information as shown below.

✱ As a Ceiling Wall type, LAMP color might be different.

■ SELECTION AND CONFIRMATION OF CUSTOM CODE

(5) Press the “+” or “-” buttons to select the custom code that matches the setting with the indoor unit. By selecting the appropriate custom code, the communication between the indoor unit and the wireless RC become possible.

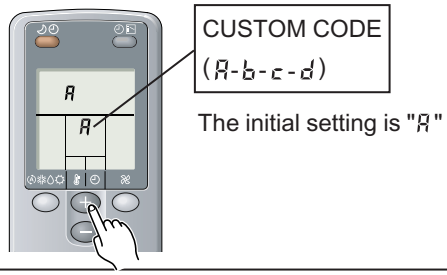

(6) Press the “VERTICAL AIRFLOW ” "button to send the code to the indoor unit.

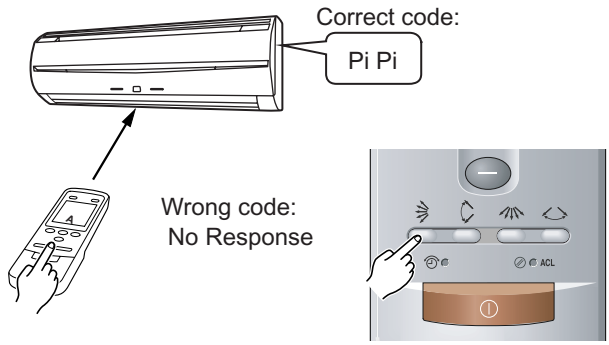

SYSTEM DESIGN

■ BUTTON NAME AND FUNCTION

✳ Refer to “6-5-2" for an outline of the address setting.

✳ It does not matter whether the refrigerant circuit address or indoor unit address is set first.
(The method shown here sets the indoor unit address first.)

✳ During address setting mode, indoor unit reject the any operation command from remote controller.

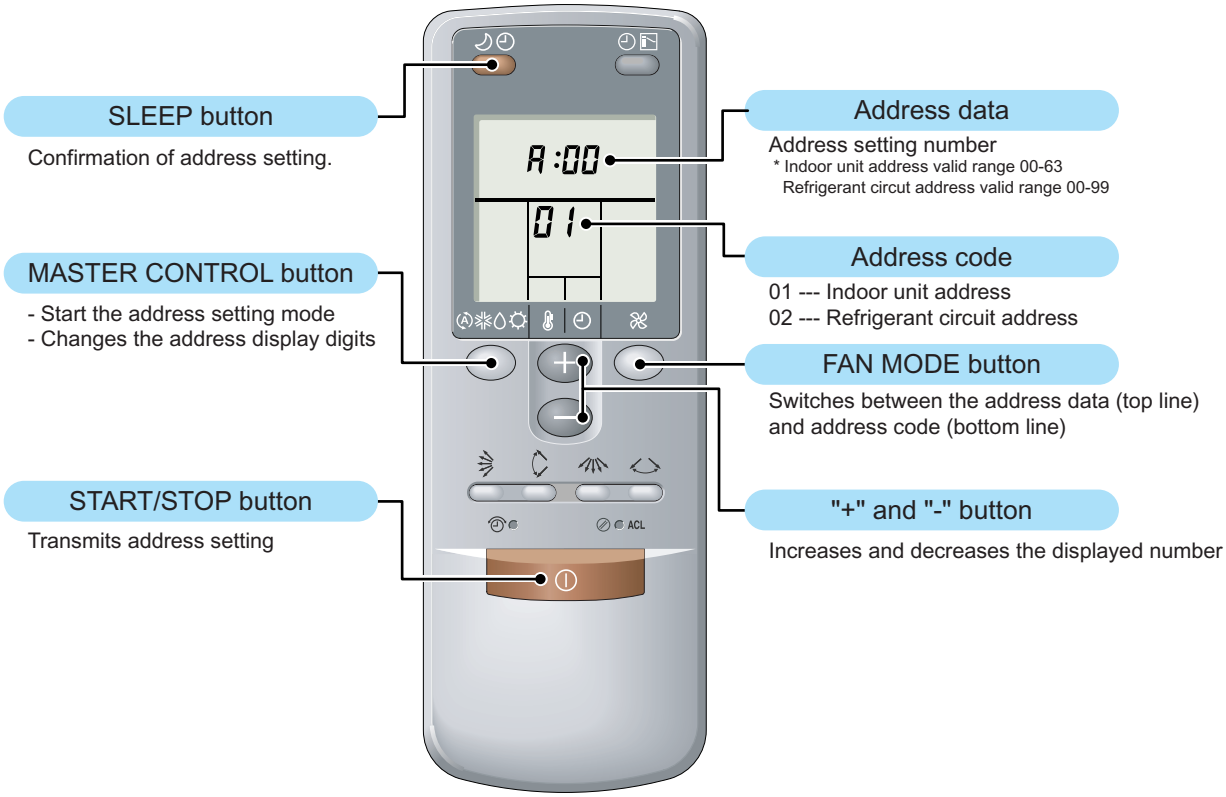

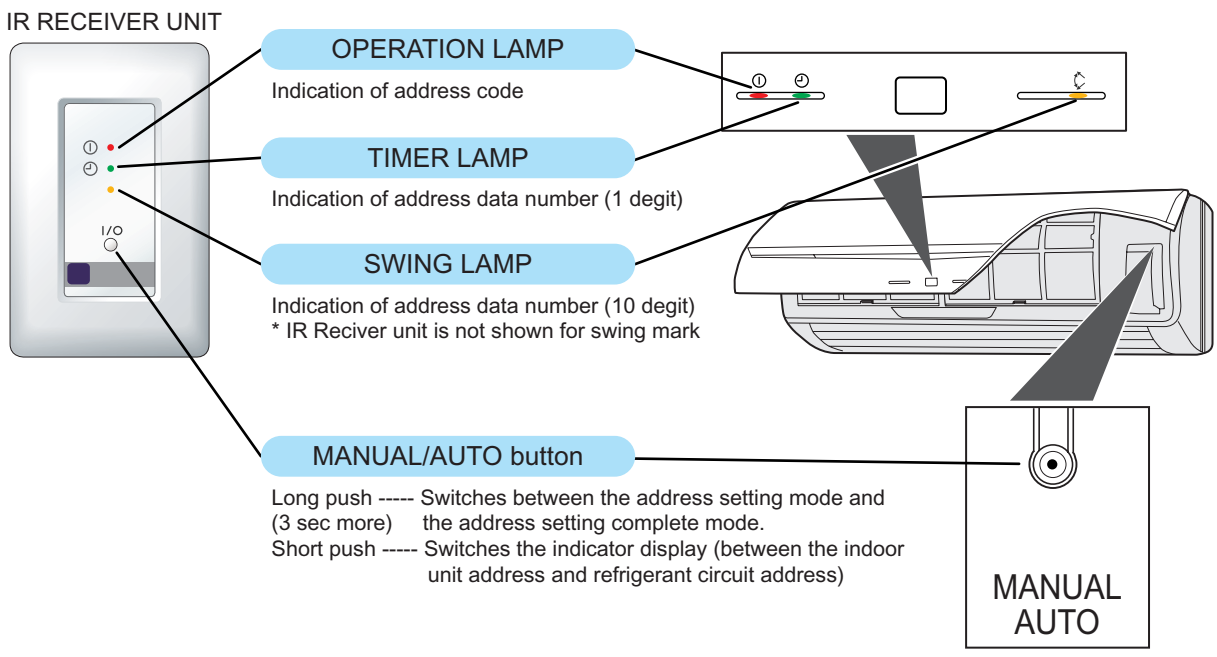

Note : Address code display is as follows (operation lamp display)

OPERATION LAMP	INDOOR UNIT ADDRESS DISPLAY	REFRIGERANT CIRCUIT ADDRESS DISPLAY
ADDRESS SETTING MODE	ON / OFF (Light continuously)	ON / OFF (Light 3 sec ON / 1 sec OFF)
ADDRESS SETTING COMPLETE MODE	ON / OFF (Light OFF)	ON / OFF (Light 0.5 sec ON / 0.5 sec OFF)

SYSTEM DESIGN

■ADDRESS SETTING

● INDOOR UNIT ADDRESS SETTING

(7) Press the “MASTER CONTROL Ⓐ❋◊☼” button to access the address setting mode.

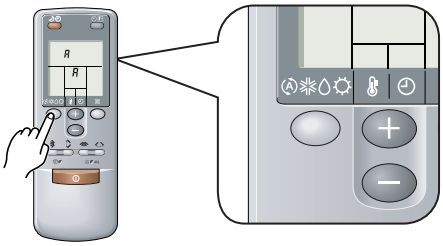

(8) Make sure the bottom number address code is ‘01’. If the number is other than ‘01’, press the “+” or the “-” buttons to alter.

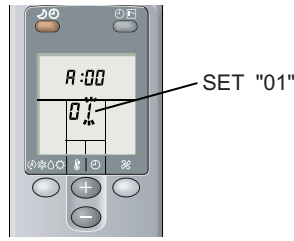

(9) Press the “FAN CONTROL ❋ ” button to access the address data setting mode. The address data will flash once this button is pressed.

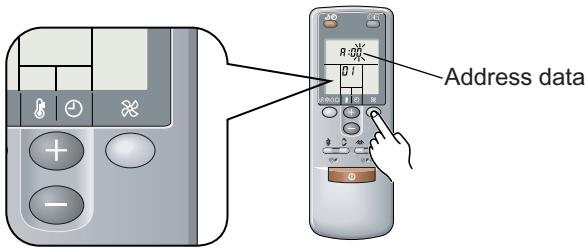

(10) Press the “+” or the “-” buttons to adjust the address data. The indoor unit address range is between 00 and 63.

Each time the master control Ⓐ❋◊☼ button is pressed, it switches between 1 unit and 10 units positions.

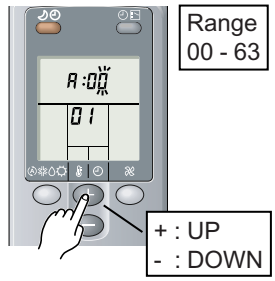

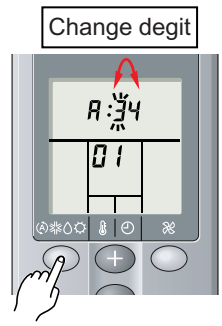

(11) Press the “START/STOP ⏻” button once to send the information. A beeping noise will be heard if the command is accepted.

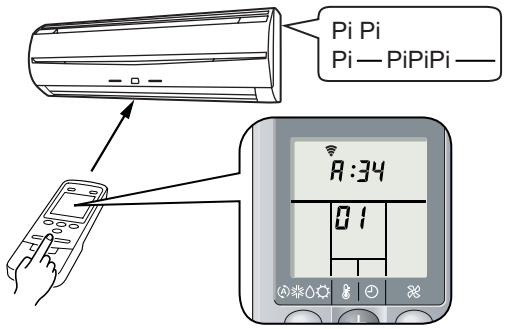

✱ In the following cases the setting signal is not read and a buzzer sounds.

The indoor unit address No. is set out of range (64 or more) : Pi Pi Pi ———— (3 sec)

The setting of the rotary switch on the PCB is not "00" : Pi Pi Pi Pi Pi

(12) Indoor unit will display the indoor unit address data number on "TIMER ◴"(GREEN) and "SWING ⟳"(ORANGE) light.

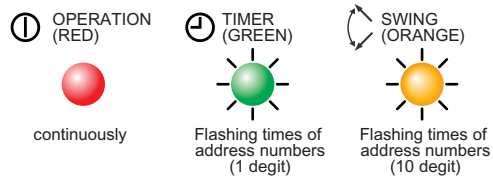

(Example) ADDRESS : 34

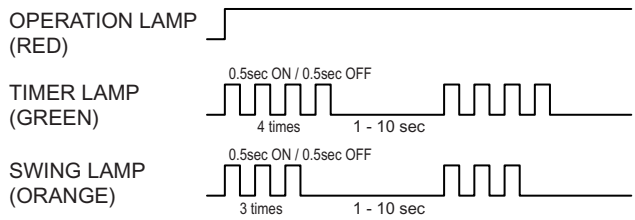

✱ ADDRESS 0 setting will not indicate TIMER LAMP.

● CHECK ADDRESS SETTING

(13) Press the “SLEEP” button.

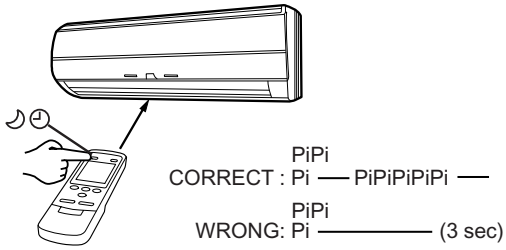

SYSTEM DESIGN

● REFRIGERANT CIRCUIT ADDRESS SETTING

Note : The refrigerant circuit address can also be set evenwhile above indoor unit address display.

(14) Press the “FAN CONTROL ※ ” button to select the address code.

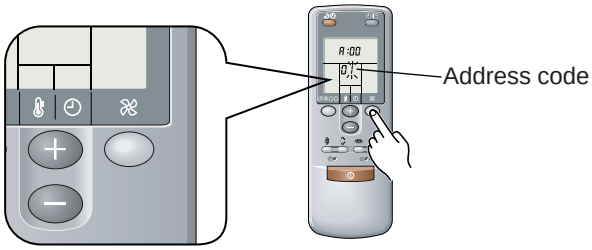

(15) Press the "+" or "-" button to adjust address code 02.

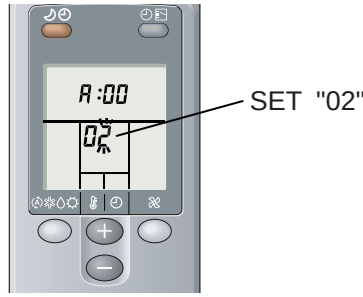

(16) Press the “FAN CONTROL ※ ” button to access the address data setting mode. The address data will flash once this button is pressed.

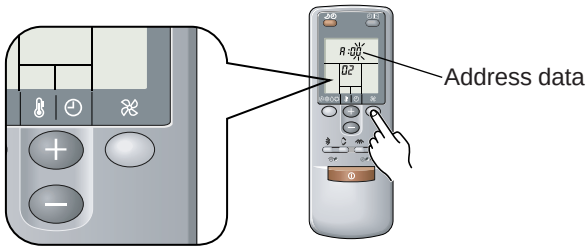

(17) Press the “+” or the “-” buttons to adjust the address data. The refrigerant circuit address range is between 00 and 99.

Each time the "master control Ⓐ❄◊☼" button is pressed, it switches between 1 unit and 10 units positions.

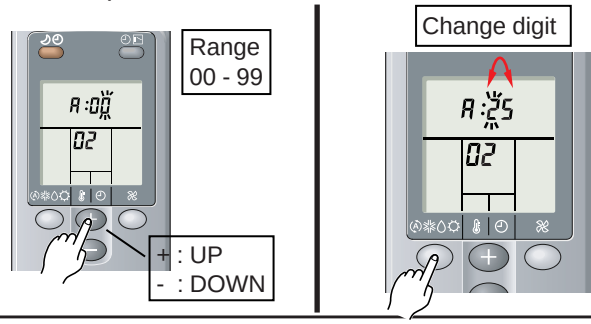

(18) Press the “START/STOP ⏻ ” button once to send the information. A beeping noise will be heard if the command is accepted.

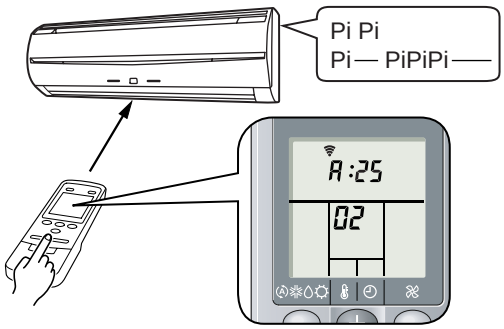

✱ In the following cases the setting signal is not read and a buzzer sounds.

The setting of the rotary switch on the PCB is not "00" : Pi Pi Pi Pi Pi

(19) Indoor unit will display the refrigerant circuit address data number on "TIMER ◴"(GREEN) and "SWING ⟳ "(ORANGE) light.

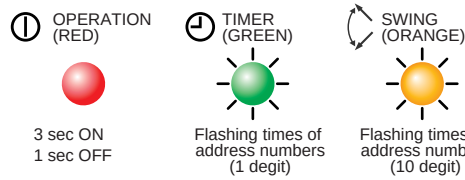

(Example) ADDRESS : 25

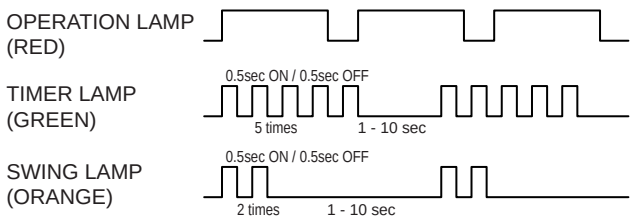

✱ ADDRESS 0 setting will not indicate TIMER LAMP and SWING LAMP.

✱ ADDRESS display will automatically switched from indoor unit address to refrigerant circuit address.

● CHECK ADDRESS SETTING

(20) Press the “SLEEP ◴ ” button.

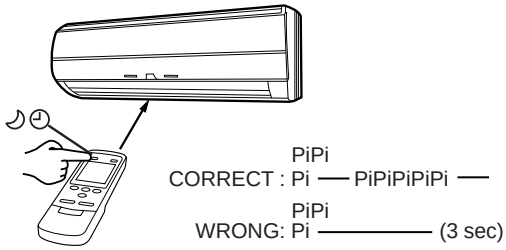

SYSTEM DESIGN

SYSTEM DESIGN

■ DISPLAY ADDRESS CODE SWITCHING

(21) Address display switches between indoor unit address and refrigerant circuit address by pressing "MANUAL/AUTO I/O " button once shortly.

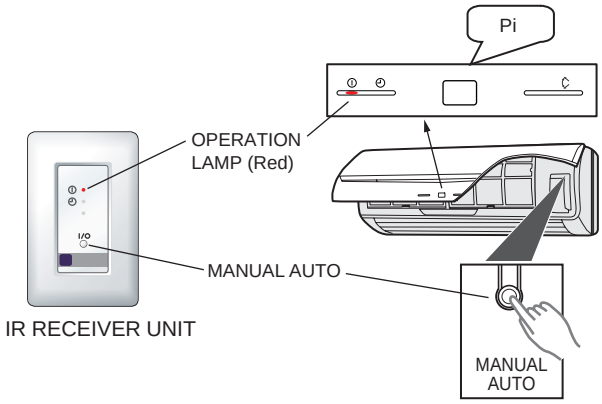

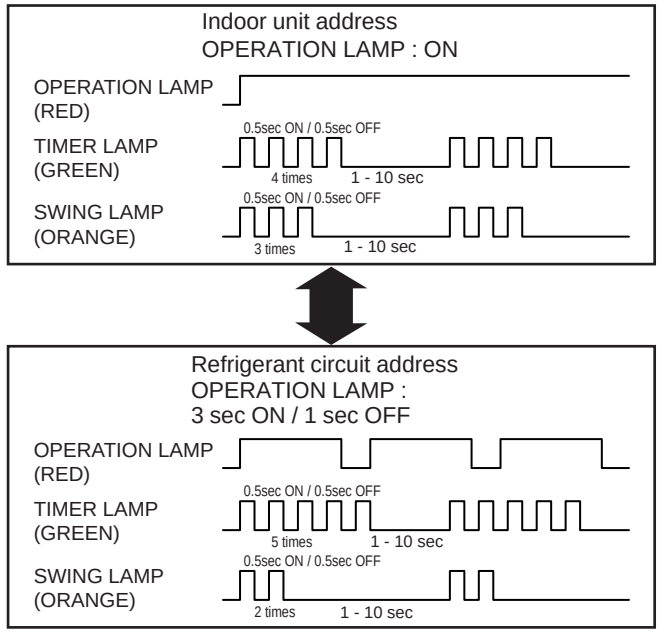

✱ Check to make sure the address setting is correct.

■ COMPLETION OF ADDRESS SETTING MODE

(22) Press and hold the "MANUAL/AUTO I/O" button for 3 seconds.

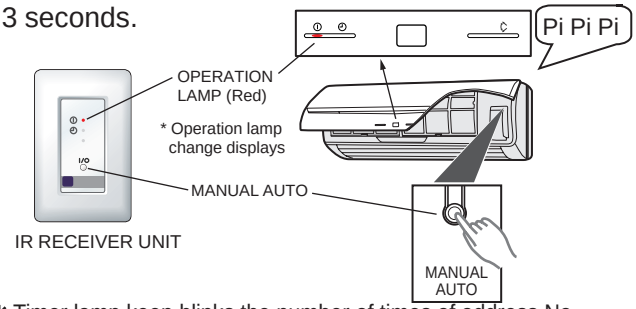

✱ Timer lamp keep blinks the number of times of address No.

(23) Press the "ACL" button.

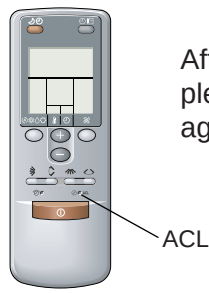

After pressing the ACL button, please set the custom code again if b,c,d setting.

✱ The address setting signal is not received afer switched address setting completion mode. (Pi Pi Pi Pi Pi)

✱ Press the "MANUAL/AUTO I/O " button again for 3 sec to return to if required to return the address setting mode.

(24) Press "MANUAL/AUTO I/O" button shortly to select the both address to be checked correct setting

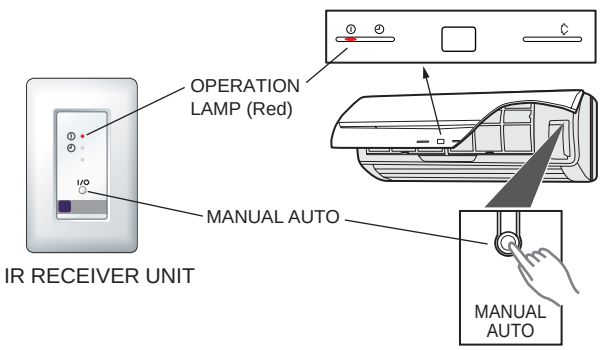

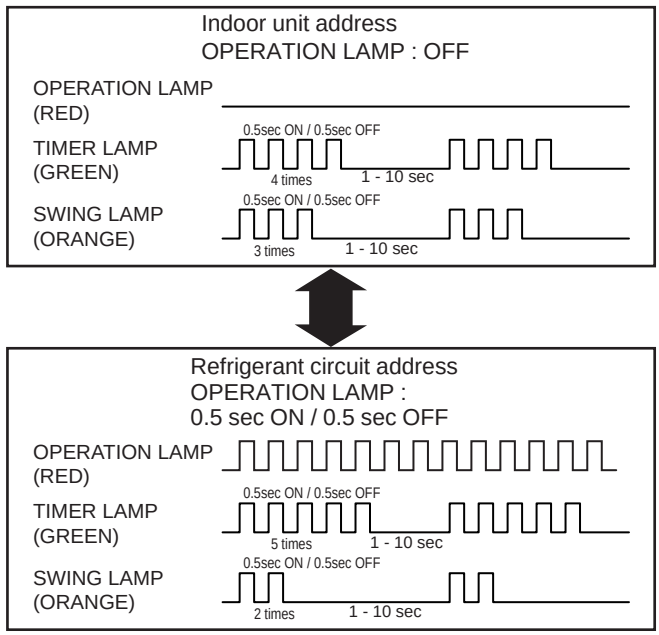

✱ Check to make sure the address setting is correct.

SYSTEM DESIGN

■ SETTING UP EACH INDOOR UNIT

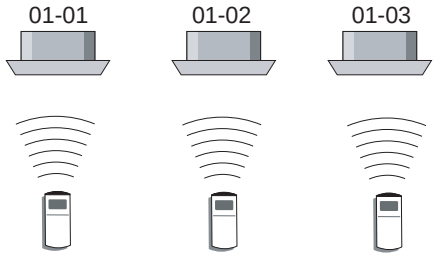

Repeat steps (1) through to (24). Steps (1) through to (6) and (21) to (24) only need to carried out if the custom code is different to the factory setting of “A”.

■ RESET THE POWER AFTER SETTING UP ADDRESS OF ALL INDOOR UNITS

Important

- **If the reset is not performed, address can not be read in normally.**
- **After all the addresses have been set, the circuit breaker needs to be switched off for at least 2 minutes.**
  After the 2 minutes has passed, power can be restored.
- **The set address is stored in the PCB and will remain in memory even when the power is turned off.**
  However setting address is effective after power reset.
  Record the address set in the indoor unit on a label, etc., and affix the label to the unit so it can be used for after-sales service operations.

- Address 0 setting will not indicate TIMER LAMP and SWING LAMP.
- Once the "ACL" button is pressed on the remote controller, the MASTER CONTROL will be set in the "AUTO MODE".
  Please adjust the MASTER CONTROL to either "COOLING" or "HEATING" before trying to operate the air conditioner.
- Note : If CUSTOM CODE is set to anything other than "A" ,the remote control must be set accordingly to the INDOOR UNIT setting.

SYSTEM DESIGN

6-6. FUNCTION SETTING
6-6-1. OUTDOOR UNIT

DIP SW	SW 1	1	Test run (Cooling)
		2	Test run (Heatling)
		3	Pump down operation
		4	Forbidden
	SW 2	1	Silent operation mode
		2	Snow falling protection fan mode
		3	Sequential start shift switch 1
		4	Sequential start shift switch 2
	SW 3	1	Outdoor unit capacity switch 1
		2	Outdoor unit capacity switch 2
		3	Outdoor unit address setting switch 1
		4	Outdoor unit address setting switch 2
	SW 4	1	Number of slave unit connection 1
		2	Number of slave unit connection 2
		3	Forbidden
		4	Error reset
	SW 5	1	Cooling capacity shift switch 1
		2	Cooling capacity shift switch 2
		3	Heating capacity shift switch 1
		4	Heating capacity shift switch 2
	SW 6	1	Pipe length switch 1
		2	Pipe length switch 2
		3	Forbidden
		4	Forbidden
	SW 7	1	System type switch 1
		2	Forbidden
		3	Indoor unit small capacity switch
		4	Forbidden
	SW 10	1	Forbidden
		2	Forbidden
		3	Forbidden
		4	Forbidden
Rotary SW	SW 8		Refrigerant circuit address switch 1
	SW 9		Refrigerant circuit address switch 2

SYSTEM DESIGN

■ SWITCH POSITION

● Outdoor unit control circuit board

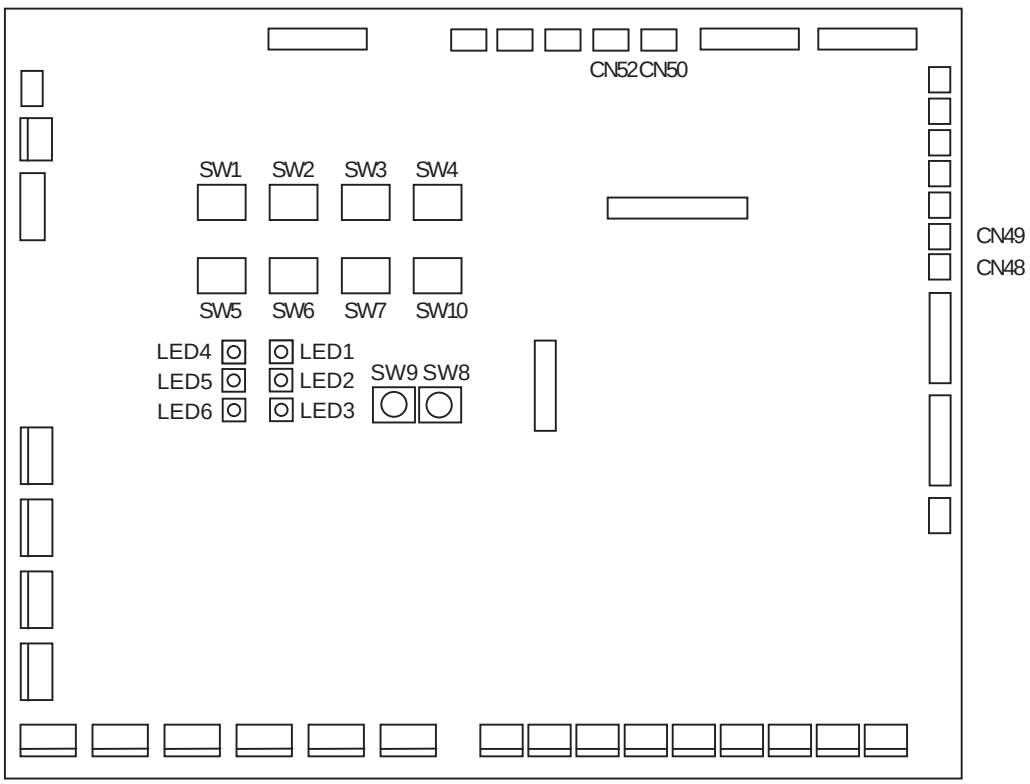

■ DIP SW SETTING

● SW1 setting

✳ Test run (cooling & Heating) (Only for master unit)

All the indoor units connected to the outdoor unit can be test-operated by DIP switch setting.

SELECTOR SWITCH FOR TEST RUN AND NORMAL OPERATION (◆ ▪ ▪ ▪Factory setting)

	SW1-1	SW1-2	Test Run	Remarks
◆	OFF	OFF	Normal operation	SW1-1/SW1-2:OFF/ON or ON/OFF→OFF/OFF
	ON	OFF	Cooling test run	SW1-1/SW1-2:OFF/OFF or ON/ON→ON/OFF
	OFF	ON	Heating test run	SW1-1/SW1-2:OFF/OFF or ON/ON→OFF/ON
	ON	ON	Normal operation	SW1-1/SW1-2:OFF/ON or ON/OFF→ON/ON

✳ Pump down operation (Only for master unit)

Pump down operation is set with SW1-3

PUMP DOWN OPERATION (◆ ▪ ▪ ▪Factory setting)

	SW1-3	Pump down operation	Remarks
◆	OFF	Release	ON →OFF
	ON	Operate	OFF→ON

✳ Dip SW 1-4 setting forbidden

◆	SW1-4	OFF

●SW2 setting

✳ Silent operation mode (Cooling mode only) (Setting for master and slave unit)

Sound level can be reduced using silent operation mode at cooling operation.
(when the outdoor temperature falls to 29℃, and the discharge pressure decreases to 3.0MPa or below.)

SILENT OPERATION MODE (◆ ▪ ▪ ▪Factory setting)

	SW 2-1	Silent operation mode	Remarks
◆	OFF	Release	ON →OFF
	ON	Oparate	OFF→ON

✳ Snow falling protection fan mode (Setting for master and slave unit)

When the outdoor temperature falls to 5℃, to prevent the unit from being covered with snow , the outdoor fan is periodically operated by this switch even when the compressor is stopped.

SNOW FALLING PROTECTION FAN MODE (◆ ▪ ▪ ▪Factory setting)

	SW2-2	Snow falling protection fan mode	Remarks
◆	OFF	Release	ON →OFF
	ON	Operate	OFF→ON

✳ Sequential start shift (Only for master unit)

The start-up timing of outdoor unit (compressor) can be set up so that it can delay several seconds.

(◆ ▪ ▪ ▪Factory setting)

	SW2-3	SW2-4	Sequential start shift timing
◆	OFF	OFF	Normal
	OFF	ON	21 sec. delay
	ON	OFF	42 sec. delay
	ON	ON	63 sec. delay

*This feature is useful when multiple number of outdoor units are installed and turned on at the same time to limit the starting current.

SYSTEM DESIGN

● SW3 setting

✳ Outdoor unit capacity switch (Setting for each unit. Never change at the site)

Set the Dip SW to correspond to the outdoor unit capacity.

(◆ ▪ ▪ ▪ Factory setting)

	SW3-1	SW3-2	Capacity range
◆	OFF	OFF	8 HP
◆	OFF	ON	10 HP
◆	ON	OFF	14 HP
	ON	ON	Forbidden

✳ Outdoor unit address switch (Setting for each unit)

Set the Dip SW to correspond to the outdoor unit address.

(◆ ▪ ▪ ▪ Factory setting)

	SW3-3	SW3-4	Address
◆	OFF	OFF	Master
◆	OFF	ON	Slave 1
	ON	OFF	Slave 2
	ON	ON	Forbidden

● SW4 setting

✳ Number of slave unit (Only for master unit)

Set the Dip SW to correspond to the number of slave unit.

(◆ ▪ ▪ ▪ Factory setting)

	SW4-1	SW4-2	Number of slave unit
◆	OFF	OFF	0
	OFF	ON	1
	ON	OFF	2
	ON	ON	Forbidden

✳ Dip SW 4-3 setting forbidden

◆	SW4-3	OFF

✳ Error reset (Setting for master and slave unit)

In the event of compressor failure etc., error information is stored in PCB.
After repairing the parts and turn ON the power, set the DIP-SW for reset the error.
(Note : without above setting, error information can't be released and continue to Error display.)

SW4-4	Error reset
OFF→ON ON→OFF	Error reset

SYSTEM DESIGN

● SW5 setting

✳Cooling Capacity shift SW (Only for master unit)

This setting makes it possible to vary the outflow air tempetature with in the range of about 2 degrees, by which 15% capacity increase and energy saving operation are realized.

COOLING CAPACITY SHIFT SW (◆ - - - Factory setting)

	SW 5-1	SW 5-2	Capacity shift
◆	OFF	OFF	Normal mode
	OFF	ON	Save energy mode
	ON	OFF	High power mode 1
	ON	ON	High power mode 2

✳Heating Capacity Shift SW (Only for master unit)

HEATING CAPACITY SHIFT SW (◆ - - - Facrory setting)

	SW 5-3	SW 5-4	Capacity shift
◆	OFF	OFF	Normal mode
	OFF	ON	Save energy mode
	ON	OFF	High power mode 1
	ON	ON	High power mode 2

● SW6 setting

✳Pipe Length Setting SW (Only for master unit)

Set up SW6-1 and SW6-2 to match up with the pipe length as follows.

PIPING LENGTH SETTING SW (◆ - - - Factory setting)

	SW6-1	SW6-2	Applicable piping length	Remarks: Pipe Length(m)
◆	OFF	OFF	Standard	40<Pipe Length≦80
	OFF	ON	Short	Pipe Length≦40
	ON	OFF	Medium	80<Pipe Length≦120
	ON	ON	Long	120<Pipe Length≦150

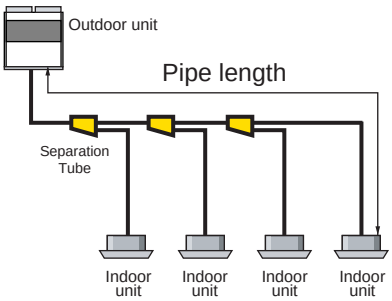

Pipe length:
Between the master outdoor unit and the farthest indoor unit

✳Dip SW 6-3, SW6-4 setting forbidden

◆	SW6-3	OFF
◆	SW6-4	OFF

● SW7 setting

✳System type of the outdoor unit (Setting for master and slave unit)

The system type of the outdoor unit can be selected by setting up SW7-1 as follows.

OUTDOOR UNIT SYSTEM TYPE SELECTION (◆ - - - Factory setting)

	SW7-1	System type
◆	OFF	Heat pump
	ON	Cooling only

✳Indoor unit small capacity setting (Only for master unit)

If the total capacity of the connected indoor units is less than 90% of the outdoor unit capacity, set this switch to ON.

INDOOR UNIT SMALL CAPACITY SETTING (◆ - - - Factory setting)

	SW7-3	Indoor unit installation capacity
◆	OFF	90% or more
	ON	less than 90%

✳Dip SW 7-2, SW7-4 setting forbidden

◆	SW7-2	OFF
◆	SW7-4	OFF

SYSTEM DESIGN

● SW10 setting

✳ Dip SW 10-1, 10-2, 10-3, 10-4 setting forbidden

(◆ ▪ ▪ ▪ Factory setting)

◆	SW10-1	OFF
◆	SW10-2	OFF
◆	SW10-3	OFF
◆	SW10-4	OFF

■ROTARY SWITCH SETTING (setting for each unit)

● SW8,9 setting

✳ Set the refrigerant circuit address

See "6-5 system setting" for detail.

Rotary SW	Description	Remarks
8	Refrigerant circuit address 1	Refrigerant circuit address (the first digit)
9	Refrigerant circuit address 2	Refrigerant circuit address (the second digit)

■EXTERNAL INPUT AND OUTPUT (only for master unit)

Connector	Input	Output	
CN48	————	Compressor ON Compressor OFF	DC12V 0V
CN49	————	Normal Error	0V DC12V
CN50	OFF:Remote controller priority ON :External Input priority	————	
CN52	Cool or Heat Select switch	————	

SYSTEM DESIGN

6-6-2. INDOOR UNIT

■ MODELS : AUXB, AU∗A, ARXB, ARXA, ARXC, AB∗A, AS∗A18-30, AW∗A

DIP-SW	SW 1	1	Forbidden
		2	Forbidden
		3	Room temp correct coefficient of heating 1
		4	Room temp correct coefficient of heating 2
	SW 2	1	Room temp correct coefficient of cooling
		2	Forbidden
		3	Refrigerant type
		4	Auto restart validity / invalidity
	SW 3	1	Forbidden (Indoor unit fan speed switch 1)
		2	Forbidden (Indoor unit fan speed switch 2)
		3	Forbidden (Indoor unit fan speed switch 3)
		4	External input select edge / pulse
	SW 4	1	Forbidden (Indoor unit model code)
		2	Forbidden (Indoor unit model code)
		3	Forbidden (Indoor unit model code)
		4	Forbidden (Indoor unit model code)
	SW 5	1	Wireless remote controller custom code switch 1
		2	Wireless remote controller custom code switch 2
		3	Outdoor unit series setting
		4	Draft prevention setting switch
Rotary SW	SW 6		Indoor unit address switch 1
	SW 7		Indoor unit address switch 2
	SW 8		Refrigerant circuit address switch 1
	SW 9		Refrigerant circuit address switch 2
	SW 10		Remote controller address switch

■ SWITCH POSITION

AUXB, AU∗A, ARXB, ARXA, AB∗A

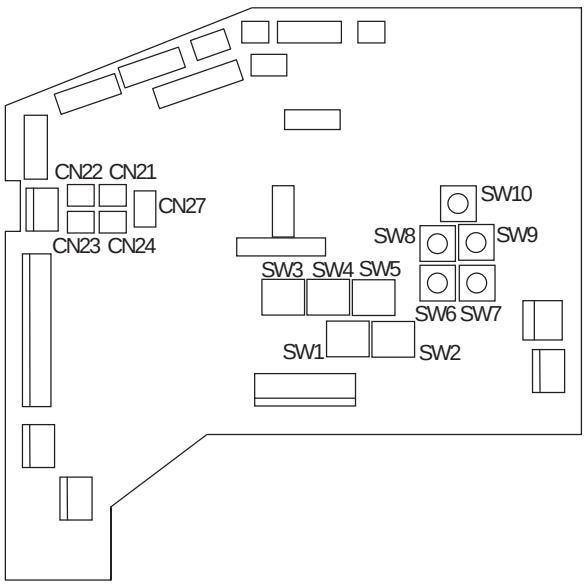

AS∗A18-30, AW∗A

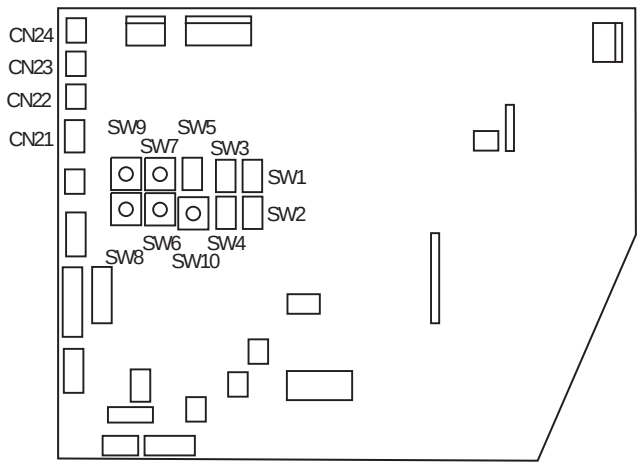

SYSTEM DESIGN

■DIP SWITCH SETTING

● SW1 setting

✳ DIP-SW1-1, SW1-2 setting forbidden

◆	SW1-1	OFF
◆	SW1-2	OFF

✳ Room temperature correct coefficient of heating.

Set the heating correct coefficient value for setting temperature. Indoor unit will be continued to operate until reaching to "Set Temperature" + "Coeffecient value".
It takes effect for mounting the unit at higher position in order to correct the temperature difference between floor and ceiling side.

HEATING TEMPERATURE CORRECTION (◆ ▪ ▪ ▪Factory setting)

	SW1-3	SW1-4	Coefficient value
◆	OFF	OFF	+ 4 deg
	ON	OFF	+ 8 deg
	OFF	ON	0 deg
	ON	ON	- 2 deg

● SW2 setting

✳ Room temperature correct coefficient of cooling.

Set the cooling correct coefficient value for setting temperature. Indoor unit will be continued to operate until reaching to "Set Temperature" + "Coeffecient value".
It takes effect for mounting the unit on floor position in order to correct the temperature defference between human around and floor side.

COOLING TEMPERATURE CORRECTION (◆ ▪ ▪ ▪Factory setting)

	SW2-1	Coefficient value
◆	OFF	0 deg
	ON	+ 2 deg

✳ DIP-SW2-2 setting forbidden

◆	SW2-2	OFF

✳ Refrigerant type

Selecting refrigerant type

REFRIGERNT TYPE (◆ ▪ ▪ ▪Factory setting)

	SW2-3	Refrigerant type
◆	OFF	R410A / R22
✳1	ON	R407C

✳1 : Set to ON for connecting R407C outdoor unit.

✳ Auto restart validity / invalidity

Auto restart function can be selected by turning this switch ON / OFF.

AUTO RESTART SETTING (◆ ▪ ▪ ▪Factory setting)

	SW2-4	Auto restart
◆	OFF	Invalidity
	ON	Validity

SYSTEM DESIGN

● SW3 setting (Never change at the site)

Indoor unit fan speed switch

This switch can select fan speed corresponding to each model.

✳ Compact Cassette Type

	AUXB07	AUXB09	AUXB12	AUXB14	AUXB18
SW 3-1	OFF	OFF	OFF	OFF	OFF
SW 3-2	OFF	OFF	OFF	OFF	OFF
SW 3-3	OFF	OFF	OFF	OFF	OFF

✳ Cassette Type

	AU*A20	AU*A25	AU*A30	AU*A36	AU*A45	AU*A54
SW 3-1	ON	OFF	OFF	OFF	ON	OFF
SW 3-2	ON	ON	OFF	ON	OFF	OFF
SW 3-3	ON	ON	ON	OFF	OFF	OFF

✳ Compact Duct Type

	ARXB07	ARXB09	ARXB12	ARXB14	ARXB18
SW 3-1	OFF	OFF	OFF	OFF	OFF
SW 3-2	OFF	OFF	OFF	OFF	OFF
SW 3-3	OFF	OFF	OFF	OFF	OFF

Please refer for static pressure setting 6-6-8

✳ Duct Type , Low Static Pressure Duct type

	ARXB25	ARXB30	ARXB36	ARXB45
	ARXA25	ARXA30	ARXA36	ARXA45
SW 3-1	OFF	OFF	OFF	OFF
SW 3-2	OFF	OFF	OFF	OFF
SW 3-3	OFF	OFF	OFF	OFF

Please refer for static pressure setting 6-6-8 (for ARXB)

✳ High Static Pressure Duct type

	ARXC36	ARXC45	ARXC60	ARXC90
SW 3-1	OFF	OFF	OFF	OFF
SW 3-2	OFF	OFF	OFF	OFF
SW 3-3	OFF	OFF	OFF	OFF

✳ Floor Ceiling Type

	AB*A12	AB*A14	AB*A18
SW 3-1	OFF	OFF	OFF
SW 3-2	OFF	OFF	OFF
SW 3-3	OFF	OFF	OFF

✳ Ceiling Type

	AB*A30	AB*A36	AB*A45	AB*A54
SW 3-1	OFF	OFF	OFF	OFF
SW 3-2	OFF	ON	OFF	ON
SW 3-3	OFF	OFF	ON	ON

✳ Wall mounted Type

	AS*A18	AS*A24	AS*A30
SW 3-1	OFF	OFF	ON
SW 3-2	OFF	ON	ON
SW 3-3	ON	ON	ON

✳ Ceiling Wall Type

	AW*A07	AW*A09	AW*A12	AW*A14	AW*A18	AW*A24	AW*A30
SW 3-1	OFF	ON	OFF	ON	OFF	OFF	ON
SW 3-2	OFF	OFF	ON	ON	OFF	ON	ON
SW 3-3	OFF	OFF	OFF	OFF	ON	ON	ON

SYSTEM DESIGN

✳External input select edge / pulse

This switch is used to select the format of external input command as shown in the table below.

(◆ ▪ ▪ ▪Factory setting)

	SW3-4	External input select
◆	OFF	Edge
	ON	Pulse

●SW4 setting (Never change at the site)

✳Indoor unit model code

This switch for changing the model code information of indoor unit PCB.

INDOOR UNIT MODEL CODE

	7	9	12	14	18	20	25(24)	30	36	45	54	60	90
SW 4-1	OFF	ON	OFF	ON	OFF	ON	OFF	ON	OFF	ON	OFF	ON	OFF
SW 4-2	OFF	OFF	ON	ON	OFF	OFF	ON	ON	OFF	OFF	ON	ON	OFF
SW 4-3	OFF	OFF	OFF	OFF	ON	ON	ON	ON	OFF	OFF	OFF	OFF	ON
SW 4-4	OFF	OFF	OFF	OFF	OFF	OFF	OFF	OFF	ON	ON	ON	ON	ON

●SW5 setting

✳Wireless remote controller custom code switch

Decide the custom code and restrict the type of infrared control signal, in order to prevent mixing of multiple indoor unit signals.

Remote controller custom code switch

(◆ ▪ ▪ ▪Factory setting)

	SW5-1	SW5-2	Custom code
◆	OFF	OFF	Type A
	ON	OFF	Type B
	OFF	ON	Type C
	ON	ON	Type D

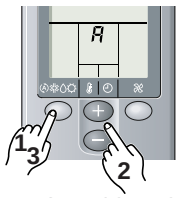

1. Press the MASTER CONTROL button for more than five seconds to start the code change.
2. Press the (+) or (-) button to select the desired code. → A → B → C → D
3. Press the MASTER CONTROL button again to end the code change.

Remote controller

✳Connected outdoor unit series

Selecting outdoor unit series.

(◆ ▪ ▪ ▪Factory setting)

	SW5-3	Outdoor unit series
◆	OFF	VRF V series
∗2	ON	VRF S series

∗2 : Set to ON for connecting S series outdoor unit.

✳Draft prevention setting switch (only for cassette type)

Set the flap angle of cassette type unit.

Draft prevention switch

(◆ ▪ ▪ ▪Factory setting)

	SW5-4	flap angle
◆	OFF	Normal position
	ON	Draft prevention position

Normal position	Draft prevention position
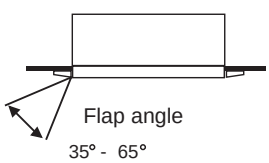	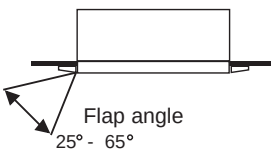
Flap angle 35° - 65°	Flap angle 25° - 65°

An air flow direction, by moving the flap angle horizontally, It can prevent that a cold wind directly hits.

*If air conditioning cooling operation is performed in long time and a humid place, there is a possibility that waterdrop may hang down from a blow-off mouth.

SYSTEM DESIGN

■ROTARY SWITCH SETTING

● SW6,7 setting

✳Indoor unit address switch

Sets the indoor unit addresses.
Please see "6-5-3 address setting" for type A indoor unit address conversion table.

INDOOR UNIT ADDRESS SWITCH (Factory setting SW 6: 0 SW 7: 0)

Rotary SW	Description	Remarks
6	Indoor unit address SW 1	Indoor unit address (the first digit)
7	Indoor unit address SW 2	Indoor unit address (the second digit)

● SW8,9 setting

✳Refrigerant circuit address switch

Sets the refrigerant circuit address.
Please see "6-5-3 address setting" for type A refrigerant circuit address conversion table.

REFRIGERANT CIRCUIT ADDRESS SWITCH (Factory setting SW 8: 0 SW 9: 0)

Rotary SW	Description	Remarks
8	Refrigerant circuit address SW 1	Refrigerant circuit address (the first digit)
9	Refrigerant circuit address SW 2	Refrigerant circuit address (the second digit)

● SW10 setting

✳Remote controller address switch

When the indoor unit is wired by remote controller group, to identity the indoor unit in the remote controller group, the number (remote controller address) in the remote controller group is set.
Set the remote controller address in the 0.1.2,~,15 order (Blank is not allowed)

REMOTE CONTROLLER ADDRESS SWITCH (Factory setting : 0)

Rotary SW	Description	Remarks
10	Remote controller address	Remote controller address

SYSTEM DESIGN

■EXTERNAL INPUT AND OUTPUT

Connector	Indoor unit type	Input	Output	Remarks
CN21	Wall mounted / Ceiling wall types	CONTROL INPUT (OPERATION / STOP)	——	See 6-7-2 for details
CN27	Other types			
CN22	All types	——	OPERATION DISPLAY (DC12V)	
CN23			ERROR DISPLAY (DC12V)	
CN24			INDOOR UNIT FAN STATUS DISPLY(DC12V)	

6-6-3. INDOOR UNIT (COMPACT WALL MOUNTED comfort model)

■ MODELS : AS∗E07-14

DIP-SW	SW 1	1	Forbidden (Indoor unit fan speed switch 1)
		2	Forbidden (Indoor unit fan speed switch 2)
		3	Forbidden
		4	External input select edge / pulse
	SW 2	1	Forbidden (Indoor unit model code)
		2	Forbidden (Indoor unit model code)
		3	Forbidden
		4	Auto restart validity / invalidity
	SW 3	1	Wireless remote controller custom code switch 1
		2	Wireless remote controller custom code switch 2
		3	Outdoor unit series setting
		4	Refrigerant type
	SW 4	1	Indoor unit address switch 2
		2	Indoor unit address switch 3
		3	Forbidden
		4	Forbidden
	SW 5	1	Refrigerant circuit address switch 2
		2	Refrigerant circuit address switch 3
		3	Refrigerant circuit address switch 4
		4	Forbidden
Rotary SW	SW 6		Indoor unit address switch 1
	SW 7		Refrigerant circuit address switch 1
	SW 8		Remote controller address switch

SYSTEM DESIGN

■ SWITCH POSITION

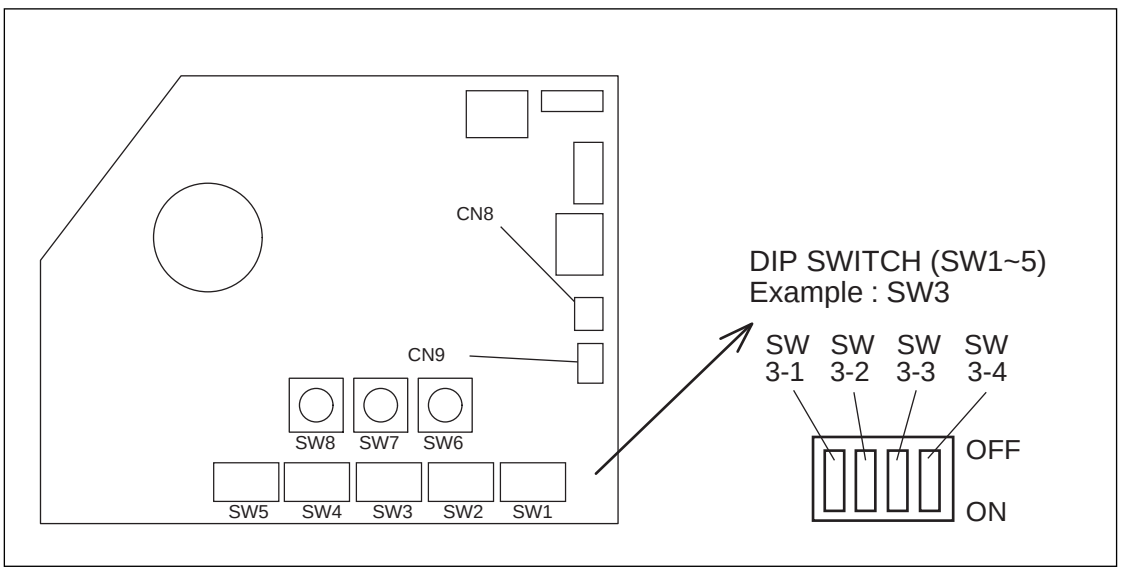

■ DIP SWITCH SETTING

● SW1 setting

✳ Fan speed setting switch (Never change at the site)

The fan speed corresponding to each model is set with the switch.

	AS*E07	AS*E09	AS*E12	AS*E14
SW1-1	OFF	ON	OFF	ON
SW1-2	OFF	OFF	ON	ON

DIP-SW 1-3 setting forbidden

(◆ ▪ ▪ ▪Factory setting)

◆	SW 1-3	OFF

✳ External input select edge / pulse

This switch is used to select the format of external input command as shown in the table below.

(◆ ▪ ▪ ▪Factory setting)

	SW1-4	External input select
◆	OFF	Edge
	ON	Pulse

● SW2 setting

✳ Model code setting switch (Never change at the site)

The model code information corresponding to each model is provided with the switch.

	AS*E07	AS*E09	AS*E12	AS*E14
SW2-1	OFF	ON	OFF	ON
SW2-2	OFF	OFF	ON	ON

DIP-SW 2-3 setting forbidden

(◆ ▪ ▪ ▪Factory setting)

◆	SW 2-3	OFF

✳ Auto restart validity / invalidity.

The auto restart function becomes validity by changing the switch position from OFF to ON.

AUTO RESTART SETTING (◆ ▪ ▪ ▪Factory setting)

	SW2-4	Auto restart
◆	OFF	Invalidity
	ON	Validity

SYSTEM DESIGN

● SW3 setting

✳ Wireless remote controller custom code switch

Decide the custom code and restrict the type of infrared control signal, in order to prevent mixing of multiple indoor unit signals.

Remote controller custom code switch

(◆ ▪ ▪ ▪Factory setting)

	SW3-1	SW3-2	Custom code
◆	OFF	OFF	Type A
	ON	OFF	Type B
	OFF	ON	Type C
	ON	ON	Type D

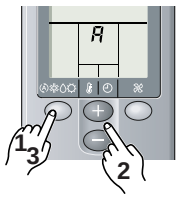

1. Press the MASTER CONTROL button for more than five seconds to start the code change.
2. Press the (+) or (-) button to select the desired code. → A → B → C → D
3. Press the MASTER CONTROL button again to end the code change.

Remote controller

✳ Connected outdoor unit series

Selecting outdoor unit series.

(◆ ▪ ▪ ▪Factory setting)

	SW3-3	Outdoor unit series
◆	OFF	VRF V series
∗1	ON	VRF S series

∗1 : Set to ON for connecting S series outdoor unit.

✳ Refrigerant type

Selecting refrigerant type

REFRIGERNT TYPE (◆ ▪ ▪ ▪Factory setting)

	SW3-4	Refrigerant type
◆	OFF	R410A / R22
∗2	ON	R407C

∗2 : Set to ON for connecting R407C outdoor unit.

SYSTEM DESIGN

● SW4 setting

✳ Indoor unit address switch

By combined with Rotary SW6, the indoor unit address(0 - 63)can be set.
Please refer "6-5-3 ADDRESS SETTING (Type B)" for the indoor unit address conversion table.

(◆ ▪ ▪ ▪Factory setting)

		SW 4-1	SW 4-2	Remarks
◆	0-15	OFF	OFF	Set with rotary SW6 see 6-5-3
	16-31	ON	OFF	
	32-47	OFF	ON	
	48-63	ON	ON	

✳ DIP-SW 4-3 and 4-4 setting forbidden

(◆ ▪ ▪ ▪Factory setting)

◆	SW4-3	OFF
◆	SW4-4	OFF

SYSTEM DESIGN

● SW5 setting

✳ Refrigerant circuit address

By combined with Rotary SW7 ,the refrigerant circuit address (0-99) can be set.
Please refer "6-5-3 ADDRESS SETTING" for refrigerant address conversion table.

(◆ ▪ ▪ ▪Factory setting)

Refrigerant circuit address	SW5-1	SW5-2	SW5-3	Remarks
◆ 0 - 15	OFF	OFF	OFF	Set with Rotary SW7, see 6-5-3
16 - 31	ON	OFF	OFF	
32 - 47	OFF	ON	OFF	
48 - 63	ON	ON	OFF	
64 - 79	OFF	OFF	ON	
80 - 95	ON	OFF	ON	
96 - 99	OFF	ON	ON	

✳ DIP SW 5-4 setting forbidden

Selecting outdoor unit series.

(◆ ▪ ▪ ▪Factory setting)

◆	SW 5-4	OFF

■ ROTARY SWITCH SETTING

● SW6 setting

✳ Indoor unit address switch

By combined with DIP switch 4-1 and 4-2,the indoor unit address(0 - 63)can be set.
Please refer "6-5-2 ADDRESS SETTING for type B" indoor unit address conversion table.

INDOOR UNIT ADDRESS SWITCH (Factory setting : 0)

Rotary SW	Description	Remarks
SW6	Indoor unit address SW	Set with DIP switch 4-1 and 4-2

● SW7 setting

✳ Refrigerant circuit address switch

By combined with DIP switch 5-1,5-2 and 5-3,the refrigerant circuit address(0 - 99)can be set.
Please refer "6-5-3 ADDRESS SETTING for type B" for the refrigerant circuit address conversion table.

REFRIGERANT CIRCUIT ADDRESS SWITCH (Factory setting : 0)

Rotary SW	Description	Remarks
SW7	Refrigerant circuit address SW	Set with DIP switch 5-1,5-2 and 5-3

● SW8 setting

✳ Remote controller address switch

When the indoor unit is wired by remote controller group, to identity the indoor unit in the remote controller group, the number (remote controller address) in the remote controller group is set.
Set the remote controller address in the 0.1.2,• • • ,15 order (Blank is not allowed)

REMOTE CONTROLLER ADDRESS SWITCH (Factory setting : 0)

Rotary SW	Description	Remarks
SW8	Remote controller address	Remote controller address

■ EXTERNAL INPUT AND OUTPUT

Connector	Input	Output	Remarks
CN10	CONTROL INPUT (OPERATION / STOP)	——	See 6-7-3 for details
CN11	——	OPERATION DISPLAY (DC12V)	

SYSTEM DESIGN

6-6-4. WIRED, SIMPLE REMOTE CONTROLLER

Wired, simple remote controller		
DIP SW	1	Dual remote controller setting
	2	
	3	Group control setting
	4	Model setting
	5	Auto changeover setting
	6	Memory backup setting (Wired remote controller only)

■ SWITCH POSITION

• Wired remote controller

MODEL : UTB - ∗UB

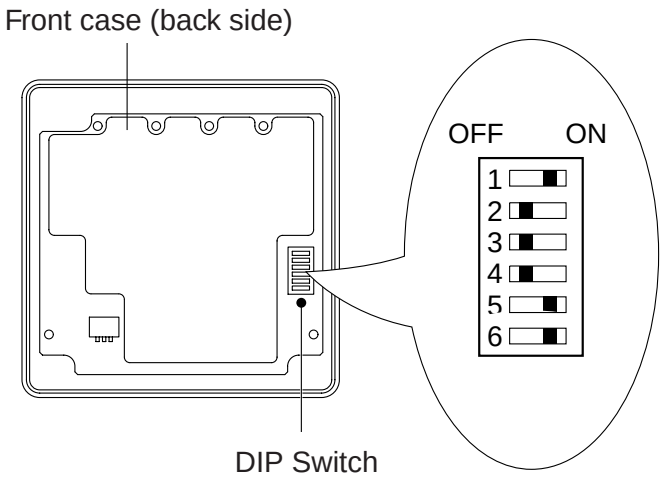

• Simple remote controller

MODEL : UTB - ∗PB

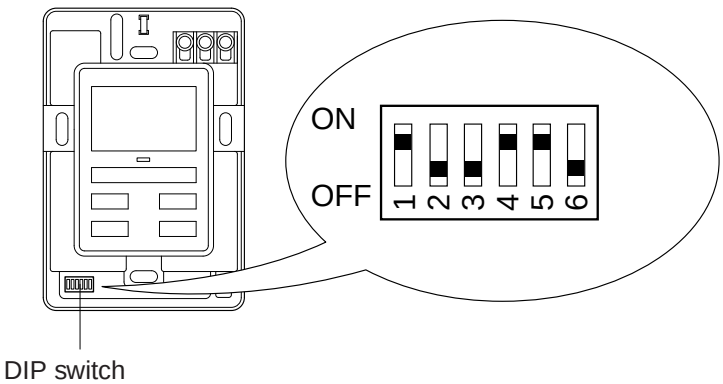

MODEL : UTB - ∗RA

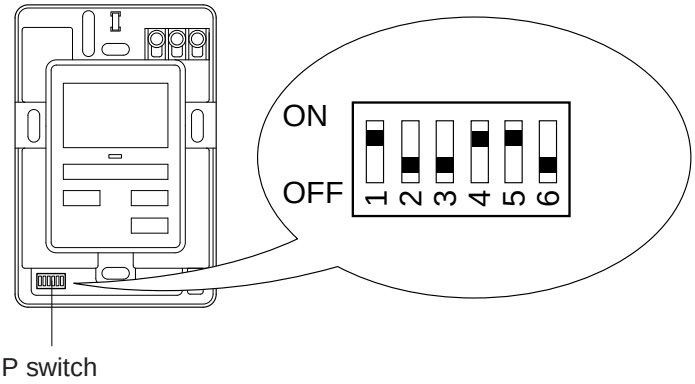

SYSTEM DESIGN

■ DIP SWITCH SETTING

● SW1 setting

✳ Dual remote controller setting

Set the remote controller DIP switch No.1 and 2 according to the following table.

(◆ ▪ ▪ ▪Factory setting)

	Number of remote controller	Master unit		Slave unit	
		DIP-SW No.1	DIP-SW No.2	DIP-SW No.1	DIP-SW No.2
◆	1 (Normal)	ON	OFF	—	—
	2 (Dual)	OFF	OFF	ON	ON

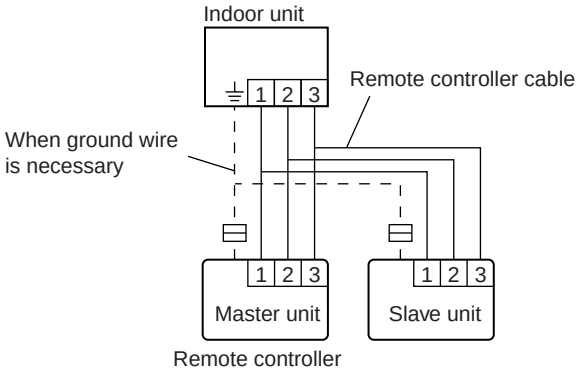

✳ Group control setting

Number of indoor unit connection (One/Multiple)
This is switched according to the number of connected indoor units.

(◆ ▪ ▪ ▪Factory setting)

	DIP-SW No.3	Number of indoor unit
◆	OFF	One unit connection
	ON	Multiple unit connection

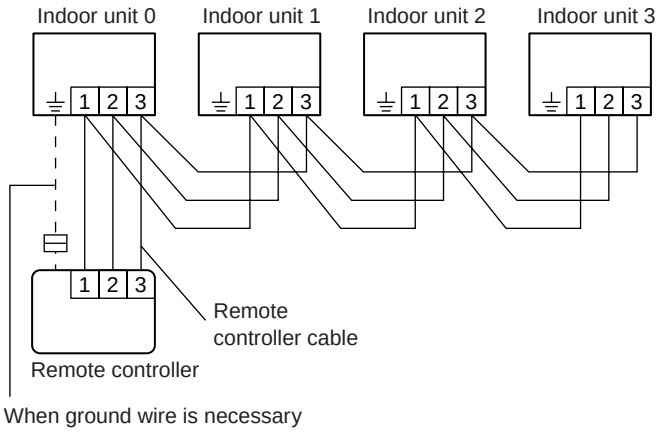

✳ Model setting

The system type of the outdoor unit can be selected by setting up DIP switch No.4 as follows.

(◆ ▪ ▪ ▪Factory setting)

	DIP-SW No.4	Model
◆	OFF	Heat Pump model
	ON	Cooling only model

Do not forget to set to ON when system uses for cooling only.

SYSTEM DESIGN

✳ Auto changeover setting

Selecting auto changeover validity / invalidity.

(◆ ▪ ▪ ▪Factory setting)

	DIP-SW No.5	Auto changeover	
◆	OFF	Invalidity	※1
	ON	Validity	※2

※1 : Set to OFF for "HEAT PUMP TYPE".

※2 : Set to ON for "COOLING ONLY TYPE".

✳ Memory backup setting (Wired remote controller only)

Set to ON to use batteries for thr memory backup.
If batteries are not used, all of the settings stored
in memory will be deleted if there is a power failure.

(◆ ▪ ▪ ▪Factory setting)

	DIP-SW No.6	Memory backup
◆	OFF	Invalidity
	ON	Validity

Never turn it ON in the case of simple remote controller.

SYSTEM DESIGN

6-6-5. GROUP REMOTE CONTROLLER

Group remote controller		
DIP SW	1	Memory backup setting
	2	Forbidden

■ SWITCH POSITION

● Group remote controller

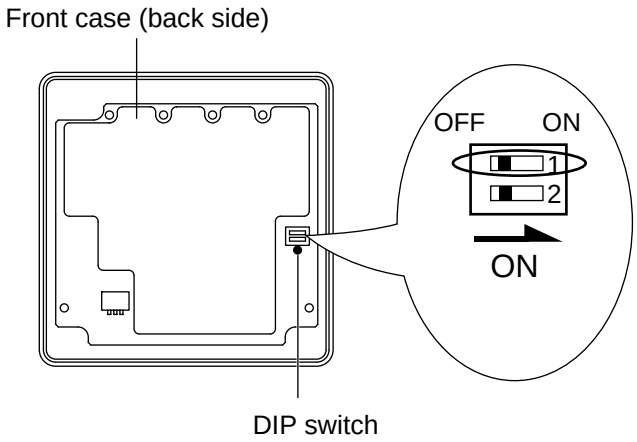

■ DIP SWITCH SETTING

● SW1 setting

∗ Set SW1 to ON to enable the memory backup.

If there is a power failure when the memory backup is enabled, the setting stored in the memory will be saved.

(◆ . . . Factory setting)

	SW1	Memory backup
◆	OFF	Invalidity
	ON	Validity

● SW2 setting : Forbidden

(◆ . . . Factory setting)

	SW2	OFF
◆		

SYSTEM DESIGN

6-6-6. CENTRAL REMOTE CONTROLLER

Central remote controller			
DIP-SW	SW 2	1	External Input validity / invalidity
		2	External Input select Edge / pulse
		3	Filter sign indication ON / OFF
		4	°C / °F switch
		5	RC operation prohibit function validity / invalidity
		6	Forbidden
		7	Forbidden
		8	SRAM battery ON / OFF
	SW 3	1	Forbidden
		2	Forbidden
		3	Forbidden
		4	Forbidden
	SW 42		Initial setting

■ SWITCH POSITION

● Central remote controller

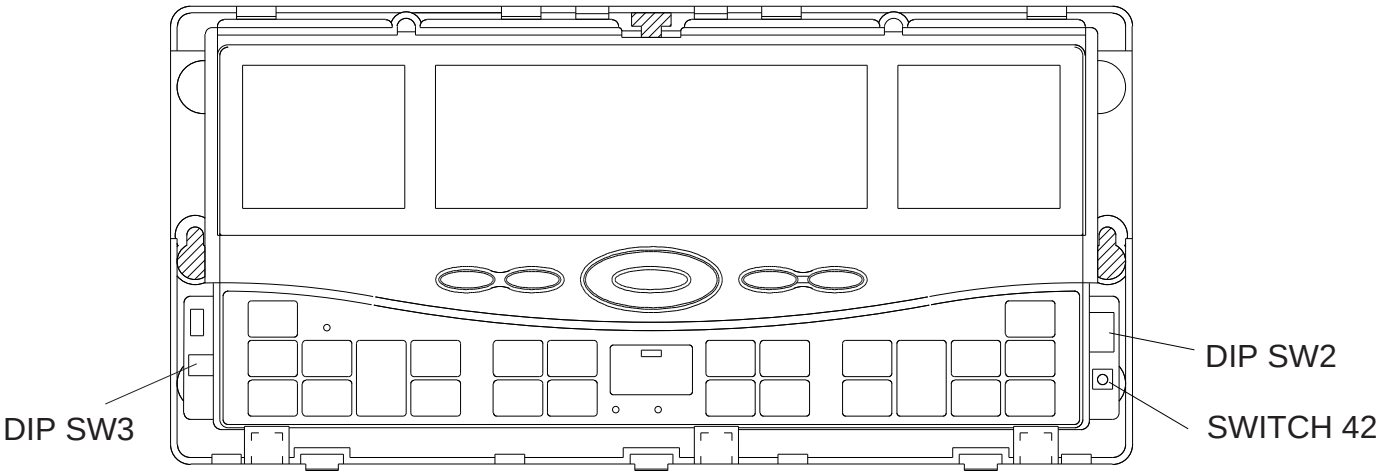

SYSTEM DESIGN

■DIP SWITCH SETTING

●SW2 SETTING

✳ External input validity / invalidity

For validity / invalidity the external input function.

(◆ ▪ ▪ ▪Factory setting)

	SW2-1	External input function
◆	OFF	Invalidity
	ON	Validity

✳ External input select edge / pulse

Select the external input command function.

(◆ ▪ ▪ ▪Factory setting)

	SW2-2	External input select
◆	OFF	Edge
	ON	Pulse

(Refer to 5-4-4 and 5-4-6 external input & output)

✳ Filter sign indication ON / OFF

Filter check sign indication or not when filter check signal come from indoor unit.

(◆ ▪ ▪ ▪Factory setting)

	SW2-3	Filter check sign indication
◆	OFF	Non-Display
	ON	Display

✳ ˚C / ˚F switch

Temperature display is centigrade(˚C) / Fahrenheit(˚F)

(◆ ▪ ▪ ▪Factory setting)

	SW2-4	˚C /˚F
◆	OFF	˚C
	ON	˚F

✳ RC operation prohibit function validity / invalidity

For validity / invalidity the wired ,simple and wireless remote controller operation prohibit function.

(◆ ▪ ▪ ▪ Factory setting)

	SW2-5	RC operation prohibit function
◆	OFF	Validity
	ON	Invalidity

SYSTEM DESIGN

✳ SW2-6 2-7 setting forbidden.

SW 2-6	OFF
SW 2-7	OFF

✳ SRAM battery ON / OFF

When installing the central remote controller, this switch must be set to ON.
(factory setting : OFF)

(◆ · · · Factory setting)

	SW2-8	SRAM Battery
◆	OFF	OFF
	ON	ON

At the time of shipment, the battery is turned off to avoid electricity consumption.
Be sure to set this switch to ON.

✳ SW42 Initial setting button

This switch is used when initializing the central remote controller.

SYSTEM DESIGN

6-6-7. DUCT STATIC PRESSURE SETTING

■MODELS : ARXB07, ARXB09, ARXB12, ARXB14, ARXB18

Change a setting of air flow, when external static pressure is more than 25 Pa.
A setting of air flow can be changed by exchanging wires for B type from A type. (Refer to following table)

How to set air flow
Connect "1" of "B type" wire to "CN4" on circuit board and "2" to the connector connected to the fan motor.

TYPE	EXTERNAL STATIC PRESSURE	WIRE	REMARK
A	0 - 25 Pa	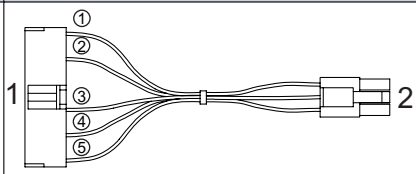 ① BLUE ② VIOLET ③ PINK ④ WHITE ⑤ BLACK	Factory setting (Standard static pressure)
B	25 - 50 Pa	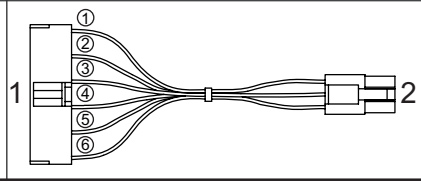 ① VIOLET ② PINK ③ BLUE ④ RED ⑤ WHITE ⑥ BLACK	Standard parts (High static pressure)

● Layout of circuit board

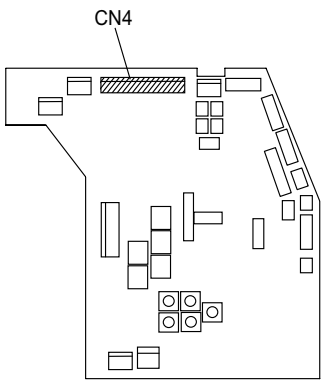

● Layout of control box

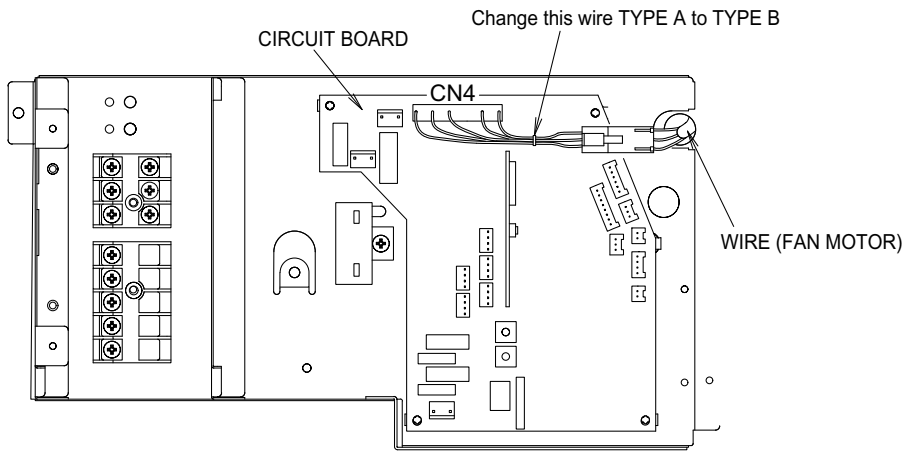

Be sure to connect the wire with connector.
If connection is improper, it will not operate properly.

SYSTEM DESIGN

■MODELS : ARXB25, ARXB30, ARXB36, ARXB45

When using the ARXB25/30/36/45 model with external static pressure of 40Pa or higher, the Wire (Fan motor) must be replaced as explained below.

Replacement method
(1) Remove the cover.
(2) Remove the Wire (Type A) connector from Wire (Fan motor).
(3) Remove the Wire (Type A) connector from CN4 of the PCB.
(4) Insert the Wire (Type B) connector into CN4 of the PCB.
(5) Insert the Wire (TypeB) connector into Wire (Fan motor).
(6) Insert the cover.

TYPE	EXTERNAL STATIC PRESSURE	WIRE	REMARK
A	0 - 40 Pa	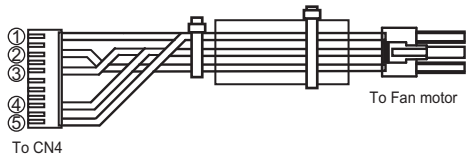	Factory setting (Standard static pressure)
B	40 - 80 Pa	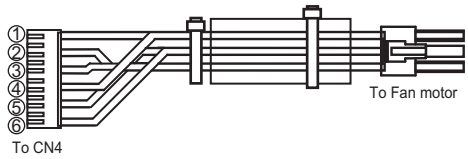	Standard parts (High static pressure)

● Layout of circuit board

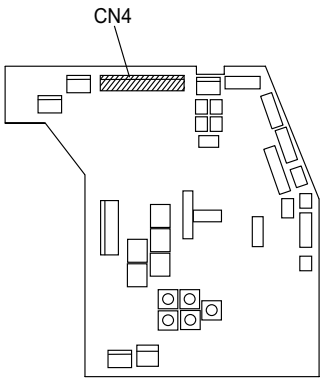

●Layout of control box

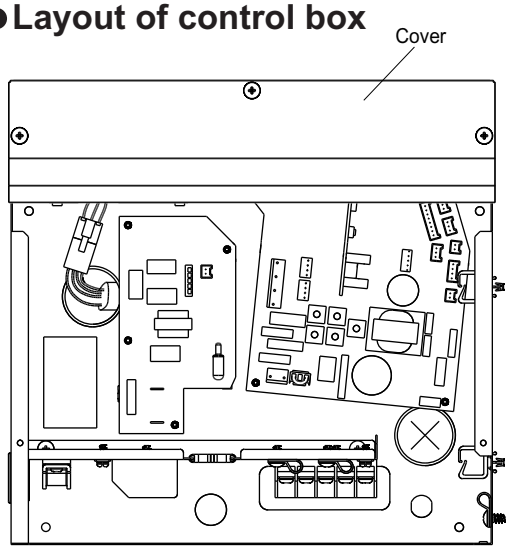

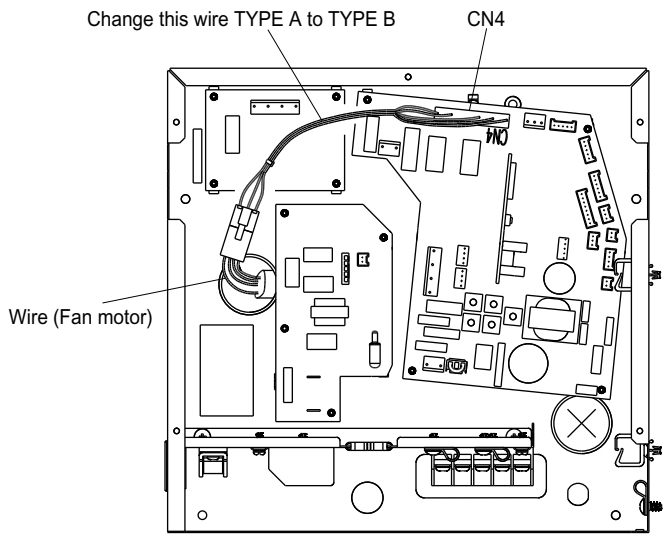

Be sure to connect the wire with connector.
If connection is improper, it will not operate properly.

SYSTEM DESIGN

6-7. EXTERNAL INPUT & OUTPUT
6-7-1. OUTDOOR UNIT
■ INPUT
● Heat and Cool switch (Heat pump type only, master unit only)
"Cooling priority" or "Heating priority" can be selected by this input.

CONNECTOR	INPUT SIGNAL	STATUS	REMARKS
CN50 (YELLOW)	OFF	Remote Controller priority	
	ON	External input priority	
CN52 (GREEN)	OFF	Cooling priority	CN50 need to be "ON".
	ON	Heating priority	

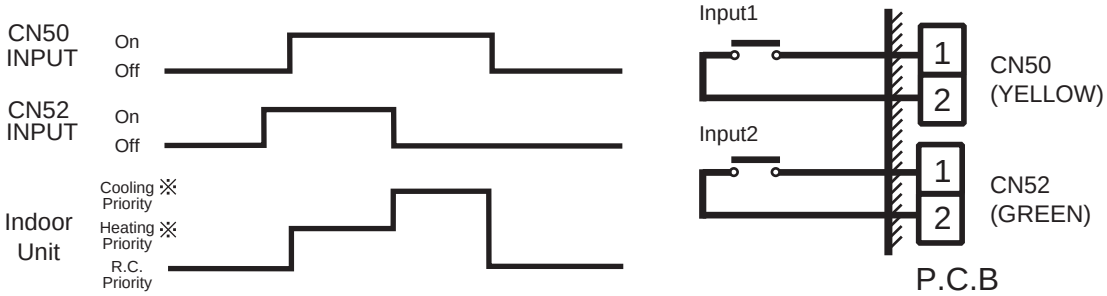

※Note : Though switching the setting of CN52 under the operation, (COOL→HEAT or HEAT→COOL) indoor unit operation has not been changed till all the connected indoor units stop. Operation mode priority is valid later on the system once stop the operation.

■ OUTPUT
● Operation display (master unit only)
This output indicates the outdoor unit's "Operation" status.

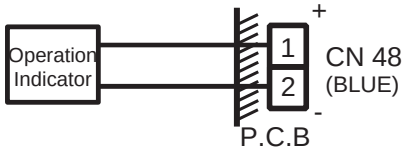

● Error display (master unit only)
This output indicates the outdoor unit and connected indoor unit's "Normal" or "Error" status.

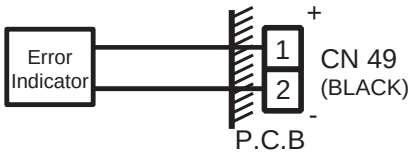

CONNECTOR	OUTPUT VOLTAGE	STATUS
CN48 (BLUE)	0V	Stop
	12V	Operation
CN49 (BLACK)	0V	Normal
	12V	Error

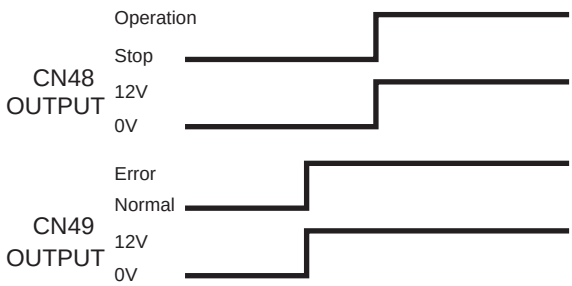

※ Maximum Output current(CN48,CN49) is 15mA. (Output voltage DC12V ± 5%)
A twisted pair cable(22AWG) shoud be used. Maximum length of cable is 25m.

※If the external indicator has malfunction, due to noise please insert a ceramic capacitor (0.1μF 25V or more) near the input port of the equipment.

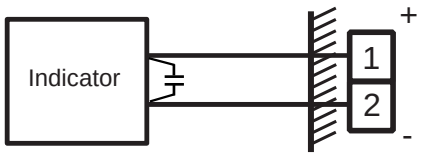

● Base heater
This output the signal when temperature goes down 2°C, and release at 4°C.

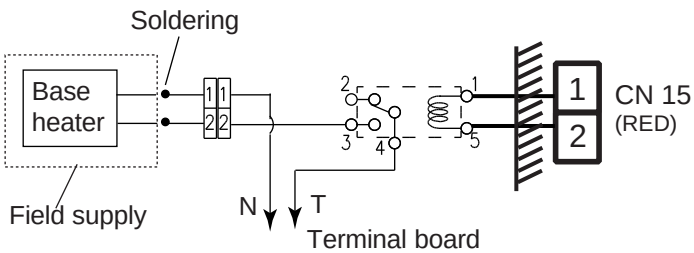

■ PARTS
Following cord (service parts) is required. Please use the parts number shown below to order the cord from your sales representative.

Name and shapes	Q'ty	Parts No.
EXTERNAL INPUT WIRE	1	9368777005

6-7-2. INDOOR UNIT

■ CONTROL INPUT (Operation / Stop)

Indoor unit can be operated or stopped by using indoor unit PCB
CN 21 (Wall mounted type / ceiling wall type) or CN27 (other types)

- Open circuit voltage : ≦ 5.25 (V).
- Short circuit current : ≦ 0.6 (mA).
- Short circuit detection resistance (R_{ON}) : ≦ 500 (ohm).
- Open circuit detection resistance (R_{OFF}) : ≧ 100 (kilo-ohm).

A twisted pair cable(22AWG) shoud be used. Maximum length of cable is 25m.

● Input select

Dip SW3-4	Input select
OFF	Edge
ON	Pulse

● In the case of "Edge" input

CONNECTOR	INPUT SIGNAL	COMMAND
Ch1 of CN21*1) (RED) or CN27*2)(RED)	OFF ⟶ ON	Operation
	ON ⟶ OFF	Stop

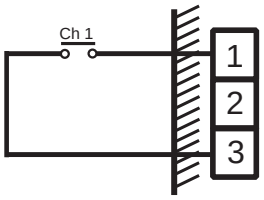

CN 21(RED) *1)
or
CN 27(RED) *2)

*1) For wall mounted type / ceiling wall type.
*2) For other types

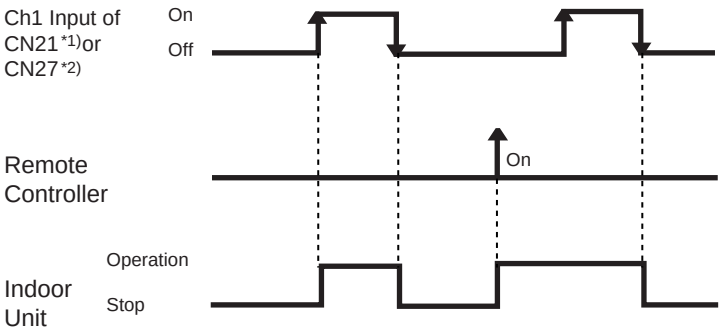

NOTE

1. The last command has priority.
2. The indoor units within the same remote controller group operates in the same mode.
3. The wire connection should be separate from the power cable line.

● In the case of "pulse" input

CONNECTOR		INPUT SIGNAL	COMMAND
CN21*1) (RED) or CN27*2)(RED)	Ch1	OFF ⟶ ON	Operation
	Ch2	OFF ⟶ ON	Stop

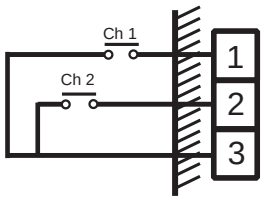

CN 21(RED) *1)
or
CN 27(RED) *2)

*1) For wall mounted type.
*2) For other types

The width of pulse must be longer than 200msec.

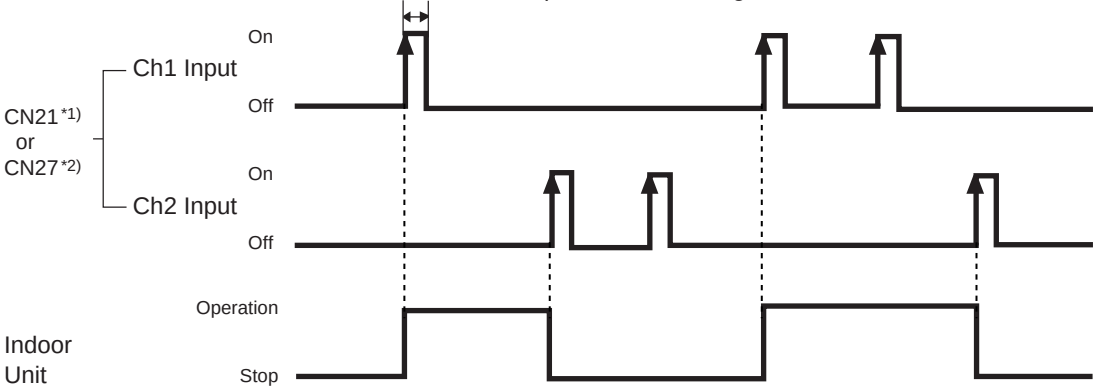

SYSTEM DESIGN

■ OUTPUT

CONNECTOR	OUTPUT VOLTAGE	STATUS
CN22	12V	Operation
	0V	Stop
CN23	12V	Error
	0V	Normal
CN24	12V	Fan run
	0V	Fan stop

・Output voltage : Hi DC12V ± 2V
Lo 0V

・Permissible current : 15mA

● Operation display

The output for CN22 is ON when the indoor unit is operating.
The output is off when the unit is stopped.

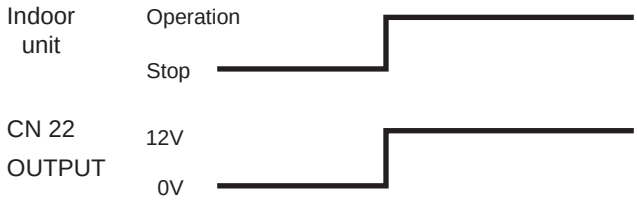

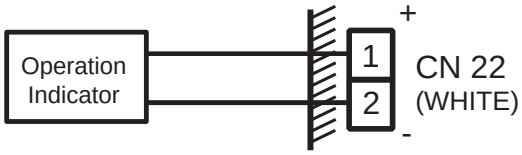

● Error display

The output for CN23 is ON when an error is generated for the indoor unit.

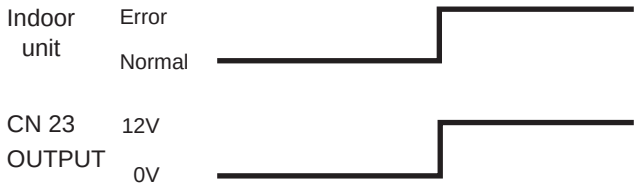

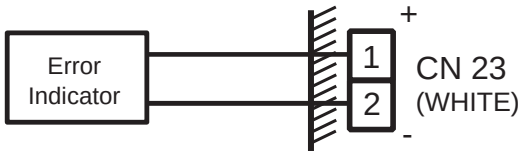

● Inter locking output with indoor unit fan

The output for CN24 is ON when the indoor unit fan is operating.
The output is off when the fan is stopped or during cold air prevention.
The output for CN24 is ON during DRY mode.

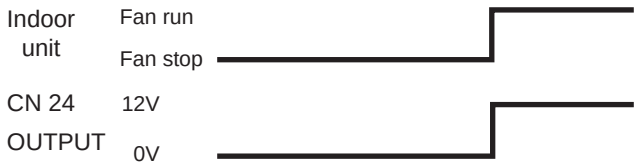

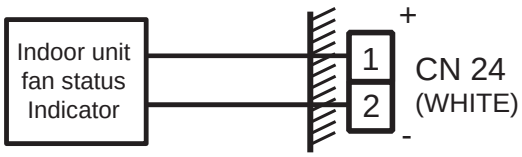

EX) Used for inter lock energize for exhaust fan.

■ PARTS

Following cord (service parts) is required. Please use the parts number shown below to order the cord from your sales representative.

Usage	Name and shapes	Q'ty	Parts No.
For output port	EXTERNAL INPUT WIRE 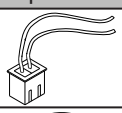	1	9368778002
For control input port	EXTERNAL INPUT WIRE 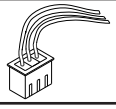	1	9368779009

※ If the external indicator has malfunction, due to noise please insert a ceramic capacitor (0.1μF 25V or more) near the input port of the equipment.

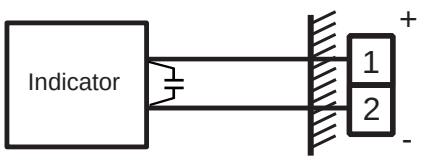

SYSTEM DESIGN

6-7-3. INDOOR UNIT (COMPACT WALL MOUNTED comfort model)

■ CONTROL INPUT (Operation / Stop)

Indoor unit can be operated or stopped by using the connector CN9 (RED) ON indoor unit PCB.

- Open circuit voltage : ≦ 5.25 (V).
- Short circuit current : ≦ 0.6 (mA).
- Short circuit detection resistance (R_{ON}) : ≦ 500 (ohm).
- Open circuit detection resistance (R_{OFF}) : ≧ 100 (kilo-ohm).

A twisted pair cable(22AWG) shoud be used. Maximum length of cable is 25m.

● Input select

Dip SW1-4	Input select
OFF	Edge
ON	Pulse

● In the case of "Edge" input

CONNECTOR	INPUT SIGNAL	COMMAND
CN9 (RED)	OFF ⟶ ON	Operation
	ON ⟶ OFF	Stop

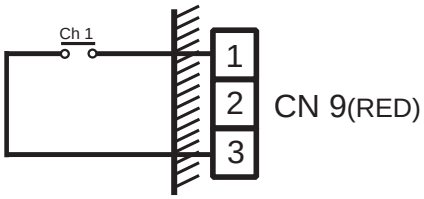

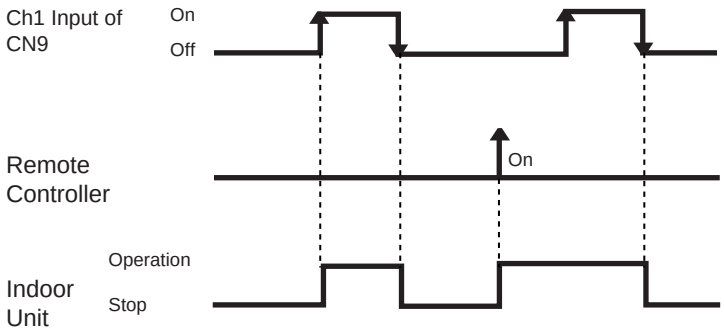

NOTE

1. The last command has priority.
2. The indoor units within the same remote controller group operates in the same mode.
3. The wire connection should be separate from the power cable line.

● In the case of "pulse" input

CONNECTOR		INPUT SIGNAL	COMMAND
CN9 (RED)	Ch1	OFF ⟶ ON	Operation
	Ch2	OFF ⟶ ON	Stop

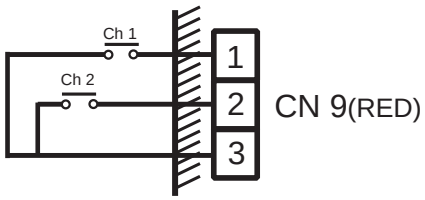

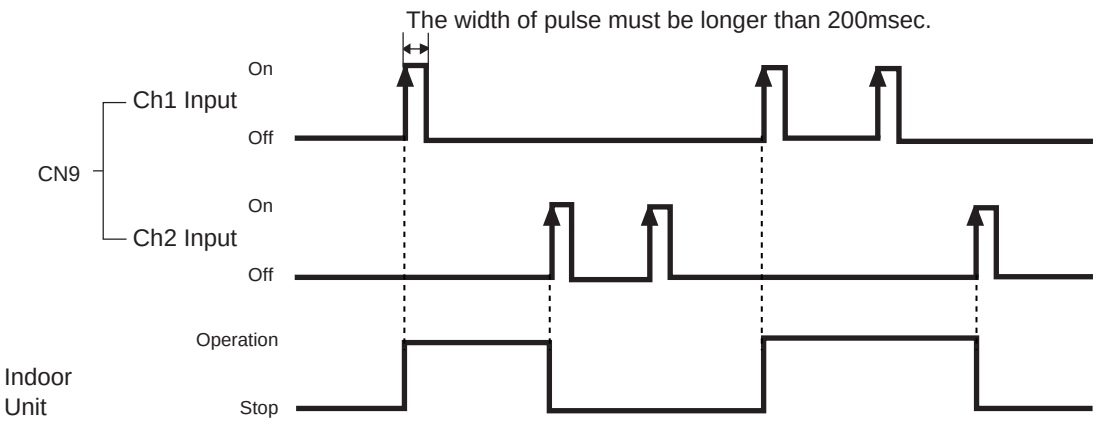

SYSTEM DESIGN

■ OUTPUT

CONNECTOR	OUTPUT VOLTAGE	STATUS
CN8 (WHITE)	12V	Operation
	0V	Stop

・Output voltage : Hi DC12V ± 2V
Lo 0V

・Permissible current : 15mA

● Operation display

The output for CN8 is ON when the indoor unit is operating.
The output is off when the unit is stopped.

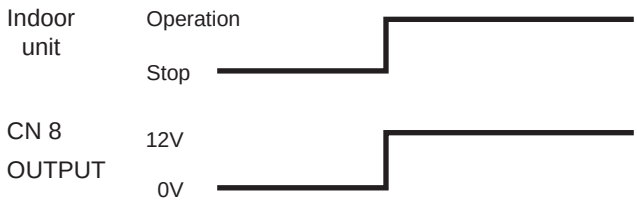

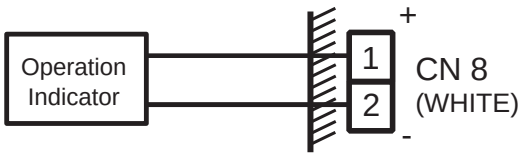

■ PARTS

Following cord (service parts) is required. Please use the parts number shown below to order the cord from your sales representative.

Usage	Name and shapes	Q'ty	Parts No.
For output port	EXTERNAL INPUT WIRE 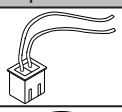	1	9368778002
For control input port	EXTERNAL INPUT WIRE 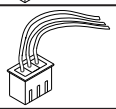	1	9368779009

※If the external indicator has malfunction, due to noise please insert a ceramic capacitor (0.1μF 25V or more) near the input port of the equipment.

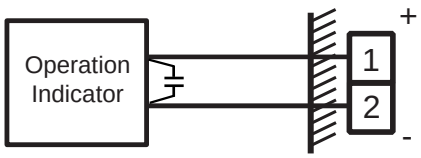

SYSTEM DESIGN

6-7-4. CENTRAL REMOTE CONTROLLER / PC CONTROLLER

■ CONTROL INPUT (ALL ON / ALL OFF)

Indoor units which stored into Central R.C. or PC controller can be operated or stopped by this input. (set up in Transmission adoptor)

- Short circuit detection resistance (R_{ON}) : ≦ 500 (ohm).
- Open circuit detection resistance (R_{OFF}) : ≧ 100 (kilo-ohm).

● Input select

• Central remote controller

DIP 2-1	DIP 2-2	Input select
ON	OFF	"Edge"
ON	ON	"Pulse"

• PC controller

Input select can be set in environmental set up.
(Please refer to PC Controller's setting manual.)

● In the case of "Edge" input

CONNECTOR		INPUT SIGNAL	COMMAND
CN9 (RED)	Ch1	OFF ⟶ ON	All ON
		ON ⟶ OFF	All OFF

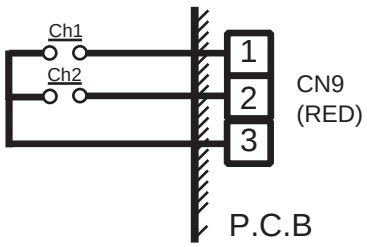

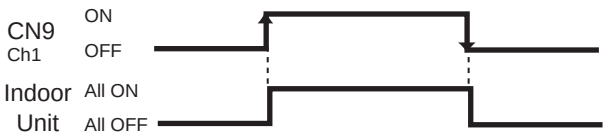

● In the case of "Pulse" input

CONNECTOR		INPUT SIGNAL	COMMAND
CN9 (RED)	Ch1	OFF ⟶ ON	All ON
	Ch2	OFF ⟶ ON	All OFF

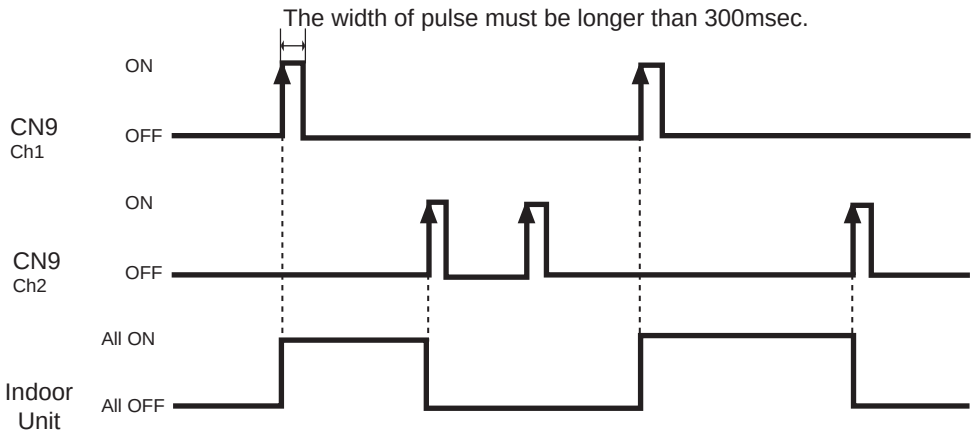

SYSTEM DESIGN

SYSTEM DESIGN

■ OUTPUT

● Operation display

This output indicates the indoor unit's "Operate" or "Stop" status.

CONNECTOR		OUTPUT SIGNAL	STATUS
CN1 (WHITE)	Ch1	open	All of indoor units "OFF"
		short	At least one more indoor units "ON"

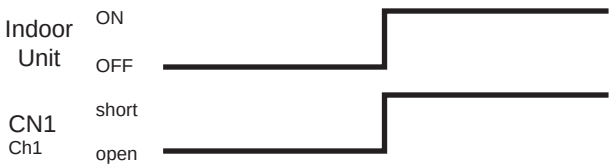

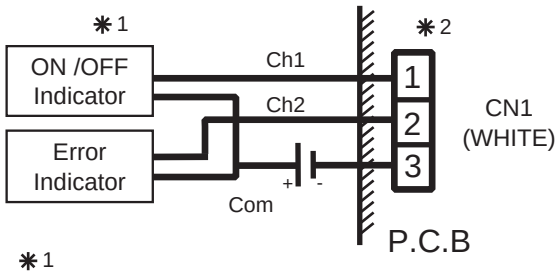

✱1
Necessary to insert a diode on both ends of relay coil.

✱2
Pin1 : NPN open collector output (15V 10mA Max)
Pin2 : NPN open collector output (15V 10mA Max)
Pin3 : Ground

● Error display

This output indicates the indoor unit's "Normal" or "Error" status.

CONNECTOR		OUTPUT SIGNAL	STATUS
CN1 (WHITE)	Ch2	open	All of indoor units "Normal"
		short	At least one more indoor units "Error"

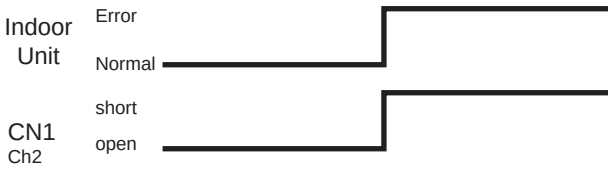

■ PARTS

Following cord (service parts) is required. Please use the parts number shown below to order the cord from your sales representative.

Name and shapes	Q'ty	Parts No.
EXTERNAL INPUT WIRE 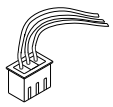	1	9368779009

SYSTEM DESIGN

6-8. DRAIN CONNECTION

6-8-1. OUTDOOR UNIT

Please connect the hose when the processing of the drain water of the installation in the room etc. is necessary by the following method.

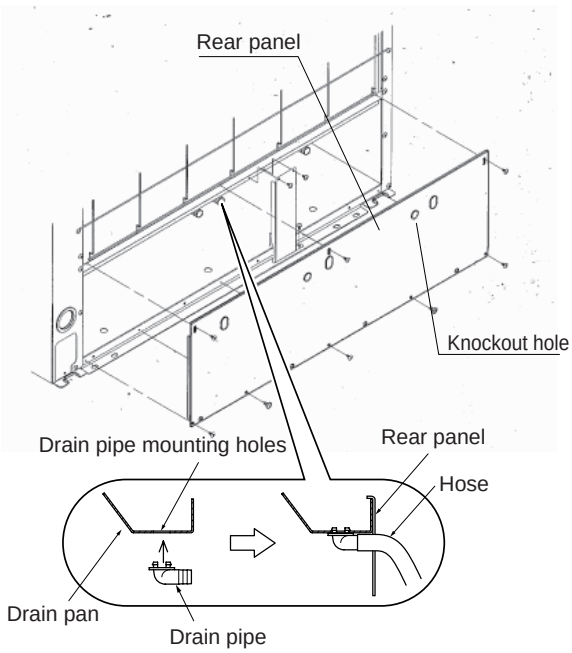

* Remove the rear panel.

* Since the drain water flows out from the outdoor unit during heating operation, install the drain pipe and connect it to an commercial 16 mm hose.
  (When heating at the outdoor temperature is 0˚C or less, construct so that drain water from the outdoor unit will not freeze in the drain pipe.)

* Always use a drain pipe at three places.

⚠ CAUTION

Drain water will leak from the bottom of outdoor unit during cooling / heating operation,even if the drain pipe is connected.To prevent the area surrounding the outdoor unit from getting wet,install a gutter surrounding the outdoor unit as shown in the figure below for drain water.

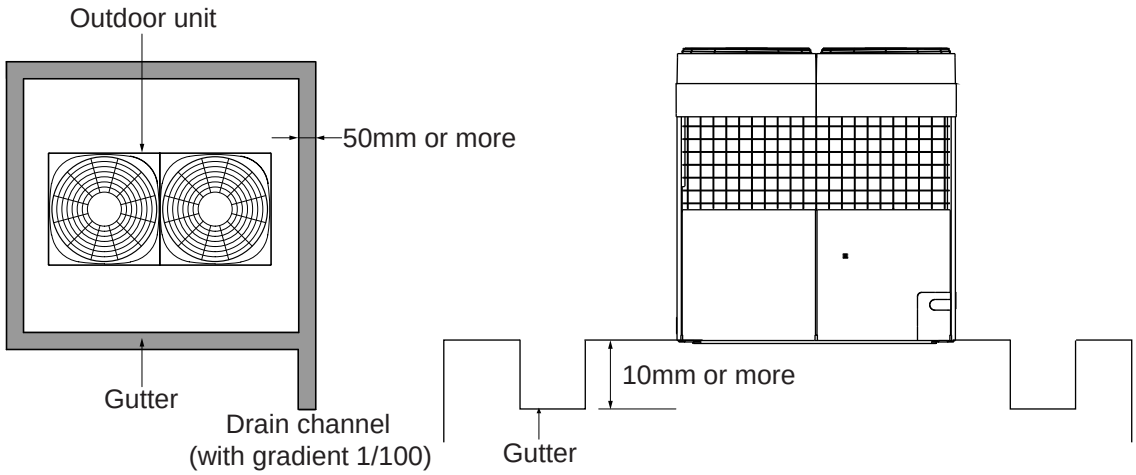

● **Detachable drain pan**

Drain pan can be dismounted easily. So that it is easily clean up drain pan which has been accumulated fallen leaves.

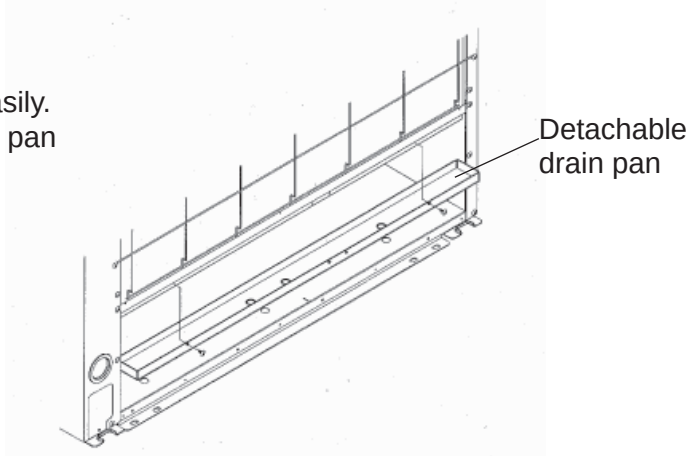

SYSTEM DESIGN

6-8-2. INDOOR UNIT

General Rules of drain process

- ✳ Install the drain pipe with downward gradient (1/100 or more) and so there are no rises in the pipe.
- ✳ Use general hard polyvinyl chloride pipe (VP25) and connect it with adhesive (polyvinyl chloride) so that there is no leakage.
- ✳ Support the drain pipe with supporters each 1.5 to 2m.
- ✳ Do not perfrom air bleeding.
- ✳ Always heat insulate the indoor side of the drain pipe.

■ COMPACT CASSETTE TYPE

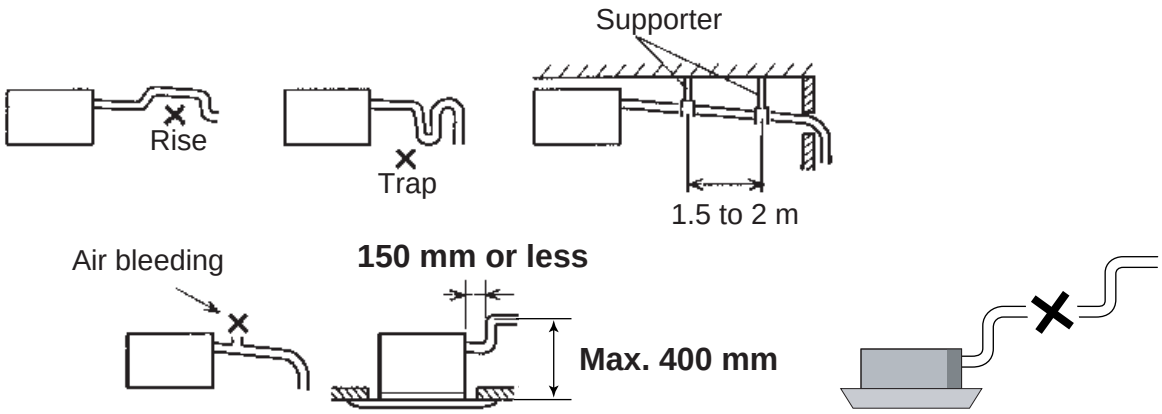

- ✳ When desiring a high drain pipe height, raise it up to 400 mm or less from the ceiling within a range of 150 mm from the body.
- ✳ A rise dimension over this range will cause leakage.

■ CASSETTE TYPE

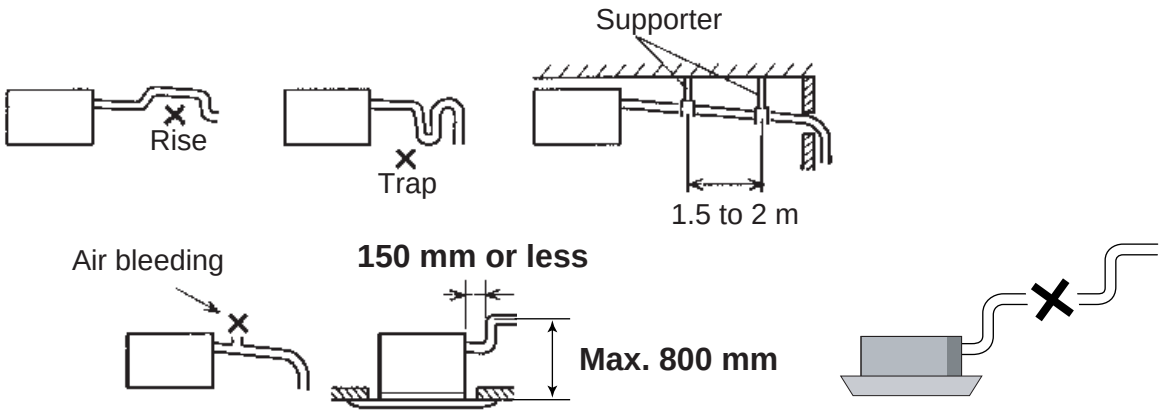

- ✳ When desiring a high drain pipe height, raise it up to 800 mm or less from the ceiling within a range of 150 mm from the body.
- ✳ A rise dimension over this range will cause leakage.

SYSTEM DESIGN

■COMPACT DUCT TYPE

Drain port : O.D ⌀26mm

A. CEILING CONCEALED SETTING

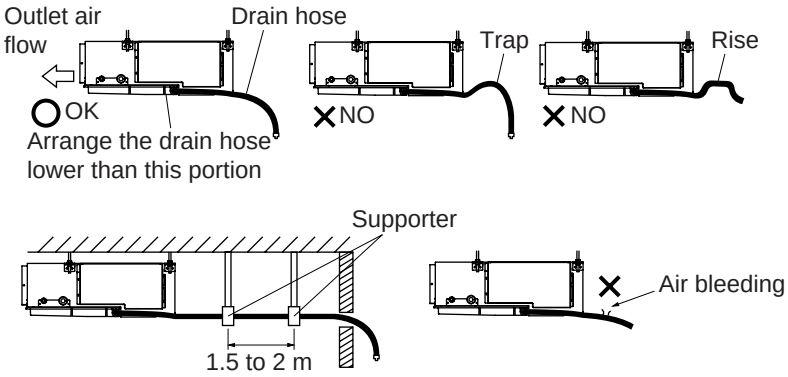

B. FLOOR STANDING CONCEALED SETTING

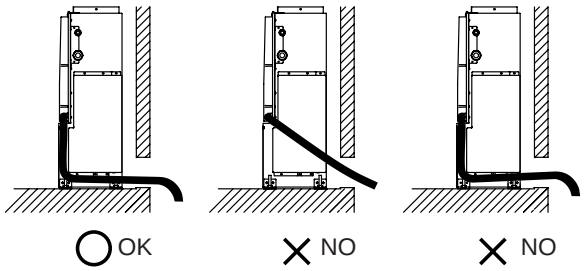

⚠ CAUTION
Connect the drain hose so that the control box cover can easily be removed for servicing when necessary.
In order to prevent water from leaking into the control box, make sure that the piping is well insulated.
After finishing the piping, the drain hose installation and the wiring, seal the holes in the wall.

■LOW STATIC PRESSURE DUCT TYPE / DUCT TYPE

Drain port : O.D ⌀38mm

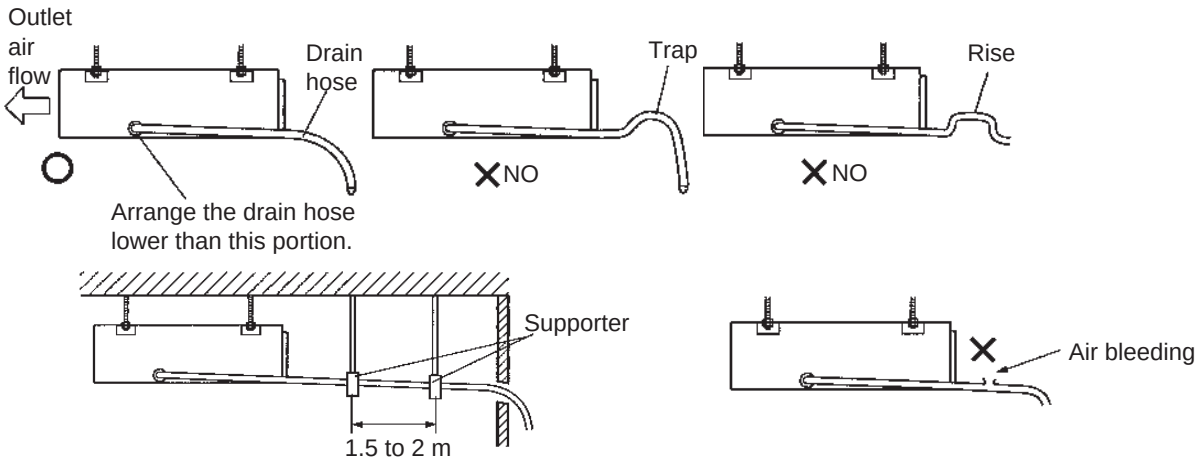

- ∗ The outside diameter of the drain port is 38 mm. Use a suitable drain hose.
- ∗ There is a drain port on both the left and right sides. Select the drain port to match the local conditions

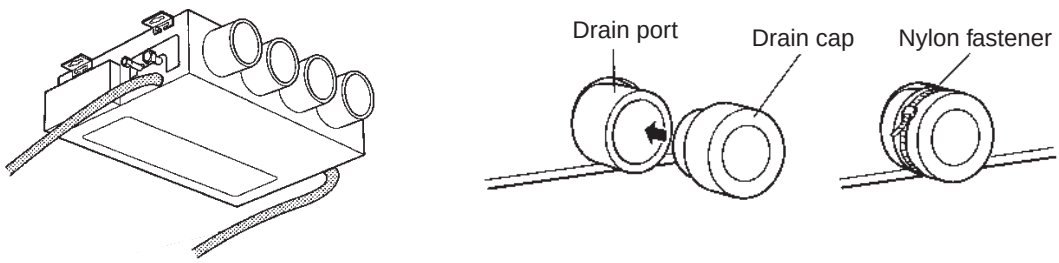

⚠ CAUTION
Always check that the drain cap is installed to the unused drain port and is fastened with the nylon fastener. If the drain cap is not installed, or is not sufficiently fastened by the nylon fastener, water may drip during the cooling operation.

SYSTEM DESIGN

■HIGH STATIC PRESSURE DUCT TYPE

Drain port : O.D ∅38mm

● Main drain pipe

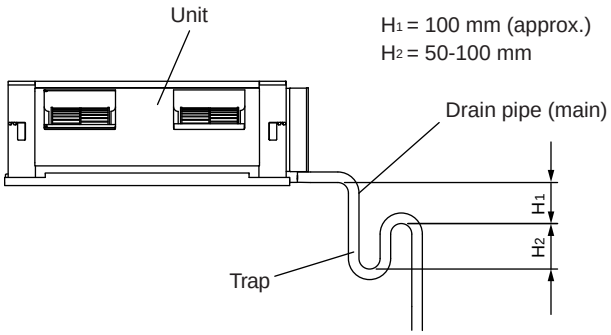

* Install the drain hose so that there is a trap.
* The position of the installed drain hose should have a downward gradient of (1/100 or more).
* Make sure that the drain hose is installed without rises.
* Make the trap near to the indoor unit.

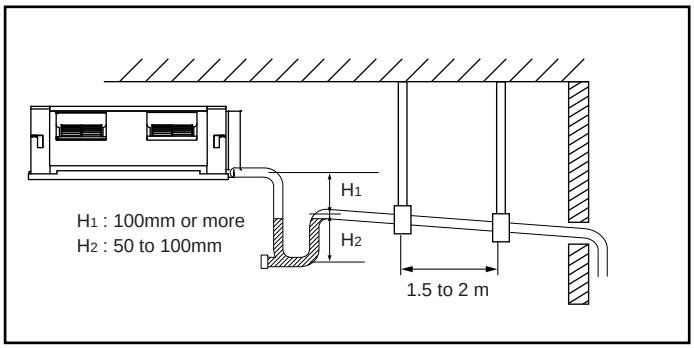

* Be sure to provide a drain trap for indoor units that have a large negative pressure in the area of the drain pan outlet.
* Provide one trap for each indoor unit. A trap will have no effect if positioned after the flows from multiple indoor units have joined together.
* Position the trap in a location where it can be cleaned.

● Safety drain pipe

There is no need to provide a trap for the safety drain pipe. If the safety drain pipe is connected to the main drain pipe, make the connection below the trap on the main drain pipe.

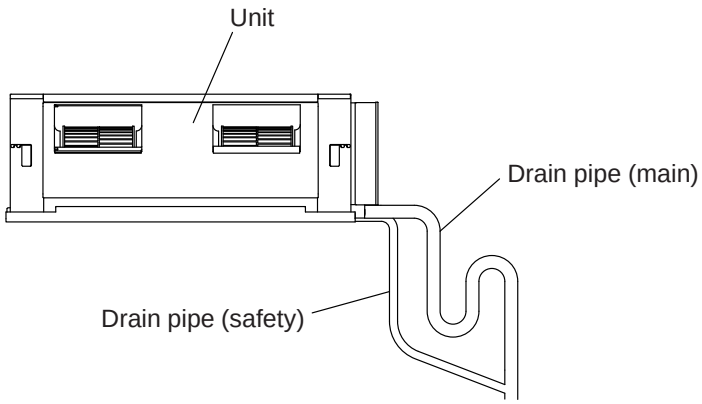

Once installation is complete, check the flow of the drain water.

SYSTEM DESIGN

■FLOOR / CEILING TYPE

A.UNDER CEILING SETTING

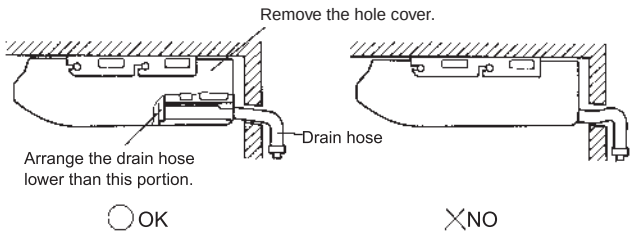

When drain hose is arranged backward.
Secure the drain hose with the VT wire (Fig. 20).

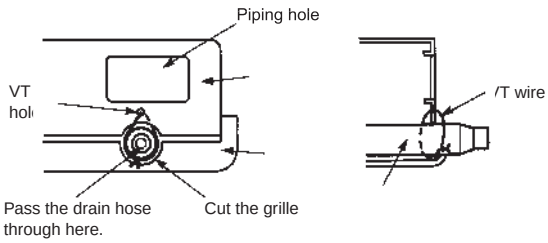

B.FLOOR CONSOLE SETTING

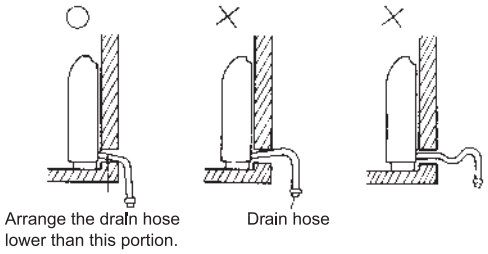

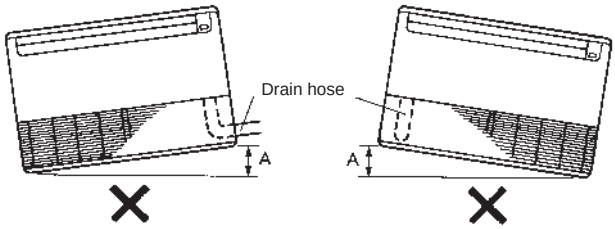

***Do not install the unit so that the drain hose side is too high.**
Height A should be less than 5mm.

■CEILING TYPE

Drain port : O.D ⌀38mm

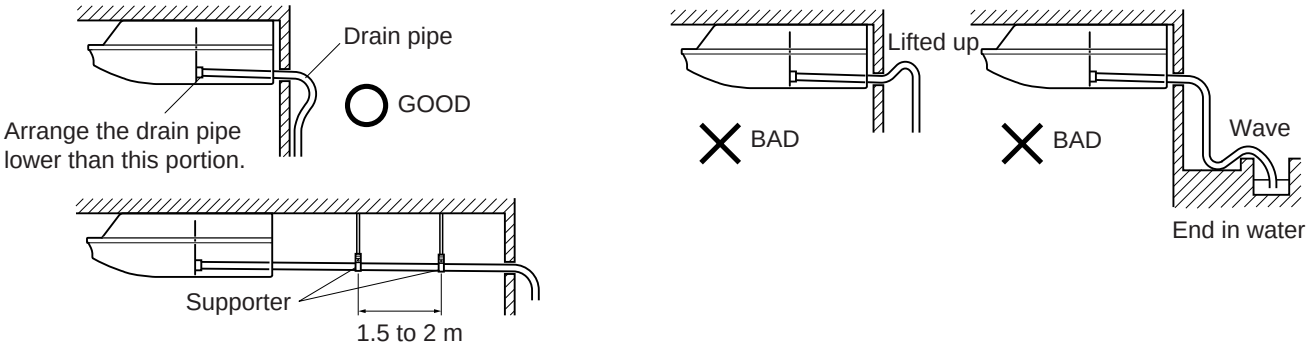

(1) Install insulation for the drain pipe.

Cut the included insulation material to an appropriate size and adhere it to the pipe.

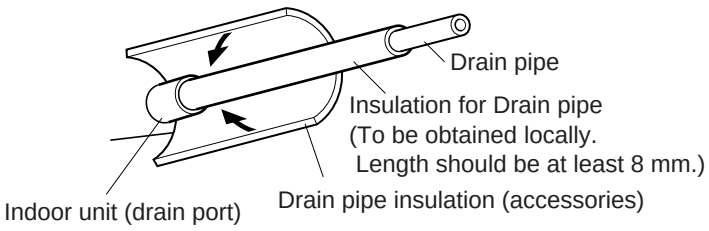

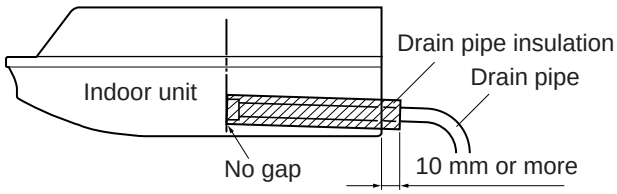

(2) If "1 Right rear piping" :fasten the drain pipe with VT wire so that the pipe slopes correctly within the indoor unit .

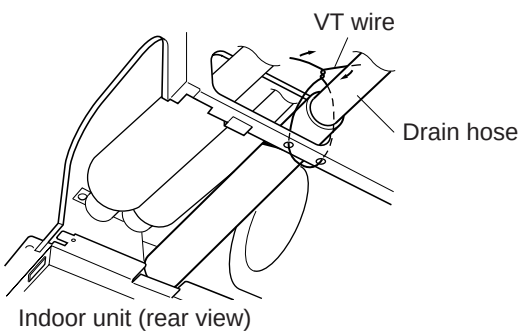

SYSTEM DESIGN

■COMPACT WALL MOUNTED TYPE

Drain hose is attached.

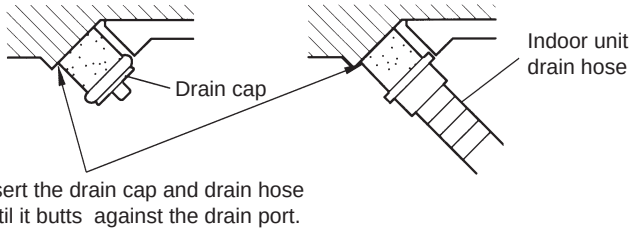

Check the following :

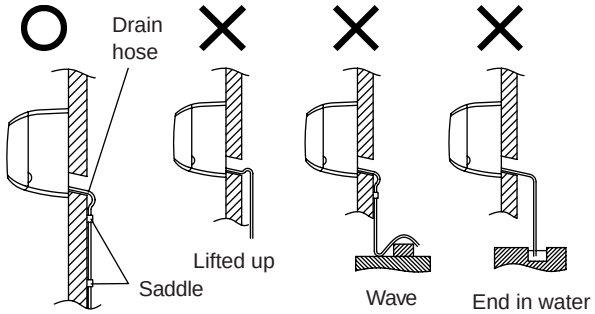

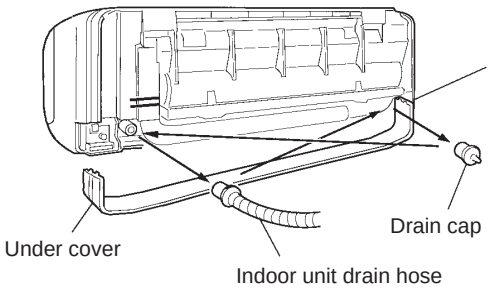

For left outlet piping, cut off the piping outlet cutting groove with a hacksaw.

Remove the drain cap by pulling at the projection at the end of the cap with pliers, etc.

■WALL MOUNTED TYPE

Drain hose is attached.

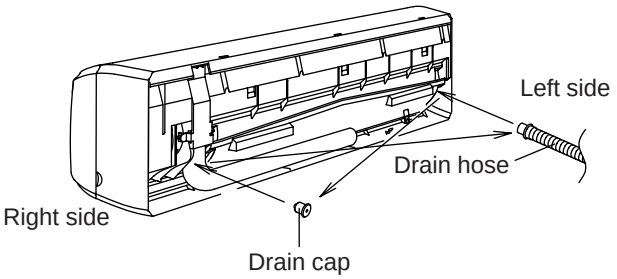

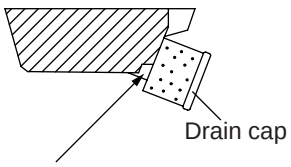

Insert the drain cap until it butts against the drain port.

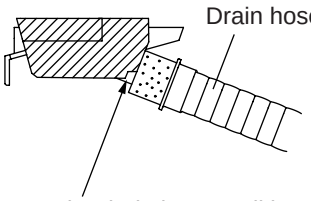

Insert the drain hose until it butts against the drain port.

Check the following:

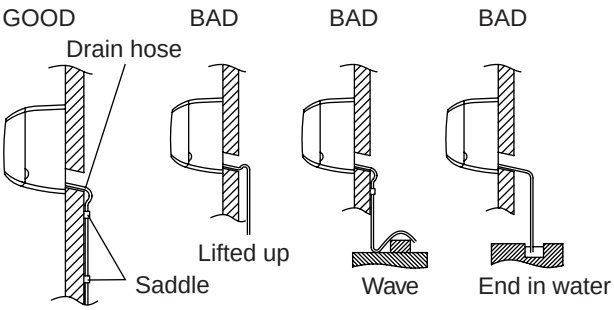

SYSTEM DESIGN

■CEILING WALL TYPE

Drain hose is attached.

Mount the drain hose to the drain port on the right side.

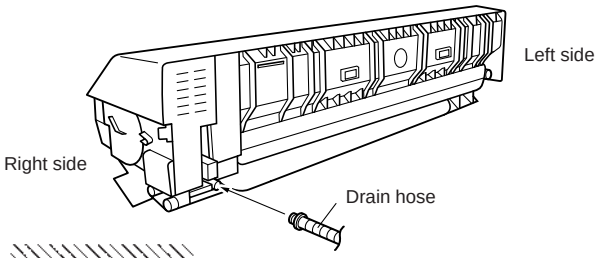

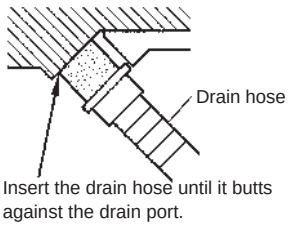

Remove the drain cap and mount to the drain port on the right side.
Mount the drain hose to the drain port on the left side.

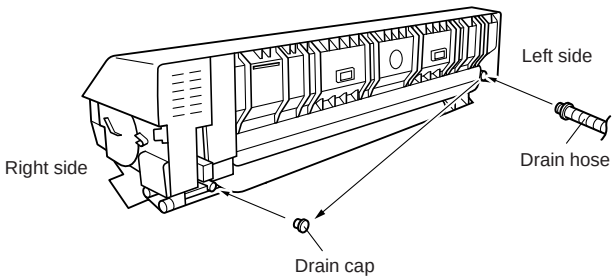

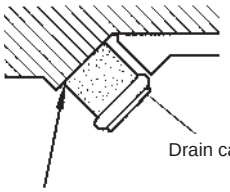

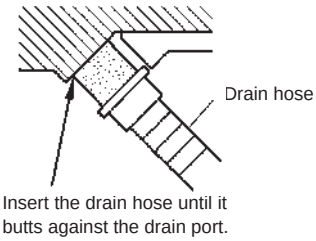

Check the following:

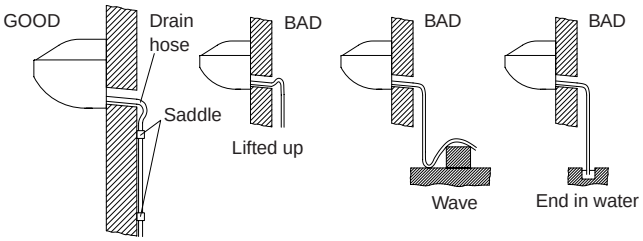

SYSTEM DESIGN

■CENTRAL DRAIN PROCESS

When converging multiple drain pipes , install according to the procedure shown below.

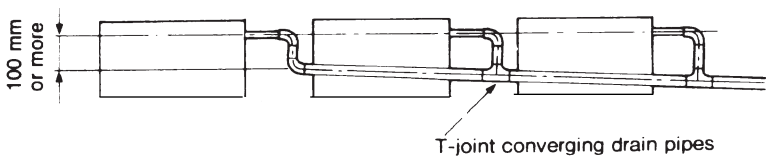

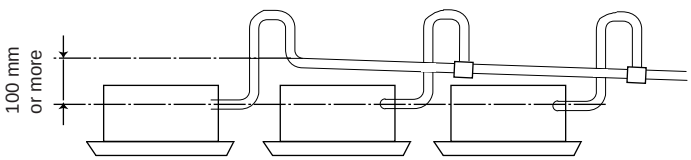

For High static pressure duct type

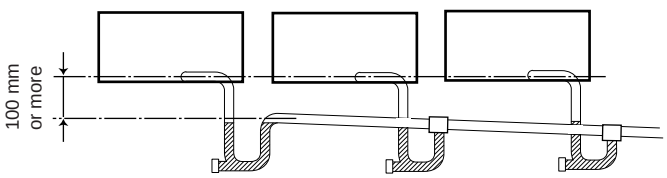

Select converging drain pipes whose gauge is suitable for the operating capacity of the unit.

■ DRAIN INSULATION

* Please confirm water is injected into Drain pan of the indoor unit, and drain is done normally when the connection of Drain hose is completed.
* Please check whether there is water leak part in the Drain piping.
* Please insulate it from heat by the heat insulator of enough thickness so that there is no be dewy when the confirmation ends. It causes the water leak like being imperfect.

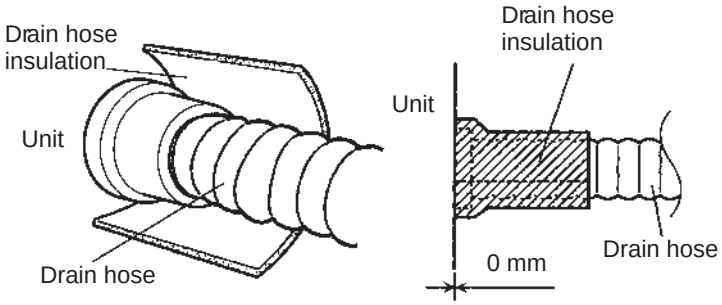

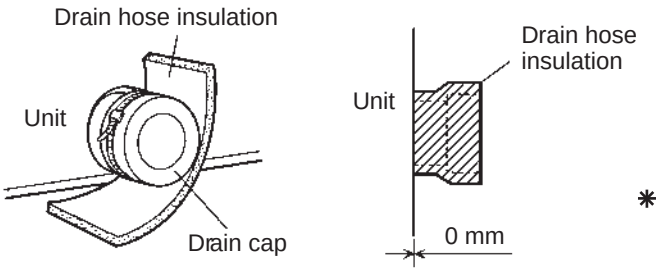

* Please roll the heat insulator also on the Drain cap side.(some models)

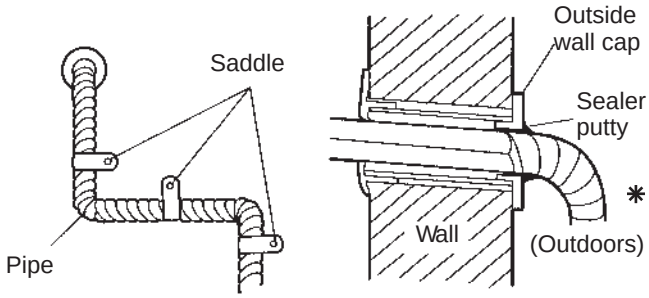

* Please cover the space with the putty etc. when you put out Drain hose from the wall.

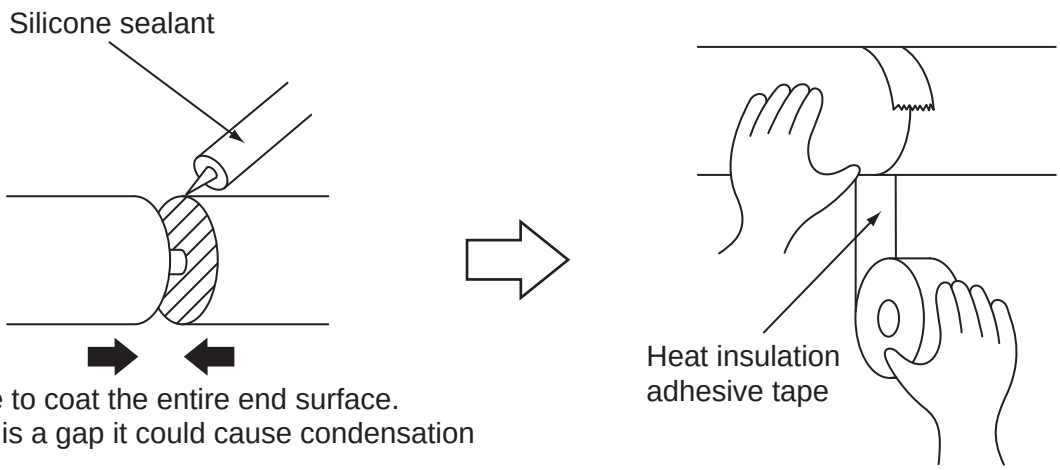

* Be sure to coat the entire end surface.
  If there is a gap it could cause condensation

SYSTEM DESIGN

6-8-3. DRAIN PUMP UNIT

■ MODEL : UTZ-PX1BBA

● Specifications

	Unit	Specifications
Height of drain up	mm	Maximum 1000
Power source	-	220 - 240V, 50 - 60Hz
Power input (230V, 50Hz/60Hz)	W	12 / 10.8
Current (230V, 50Hz/60Hz)	mA	114 / 92
Dimensions (H x W x D)	mm	176 x 178 x 154
Weight	kg	2.5
Connection pipe diameter	-	VP25 (I.D. 25mm, O.D. 32mm)
Direction of pipe connection *1	-	360°
Angle of pipe connection *2	-	0° (Horizontal) - 90°(Vertical)
Control method	-	Control board of Indoor unit
Safety device	-	Float switch, Thermal fuse

*1 Direction of pipe connection

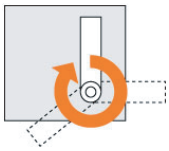

*2 Angle of pipe connection

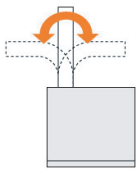

● Application indoor units

Type	Model
Compact Duct	ARXB07, ARXB09, ARXB12, ARXB14, ARXB18

● Mounting position

(Unit : mm)

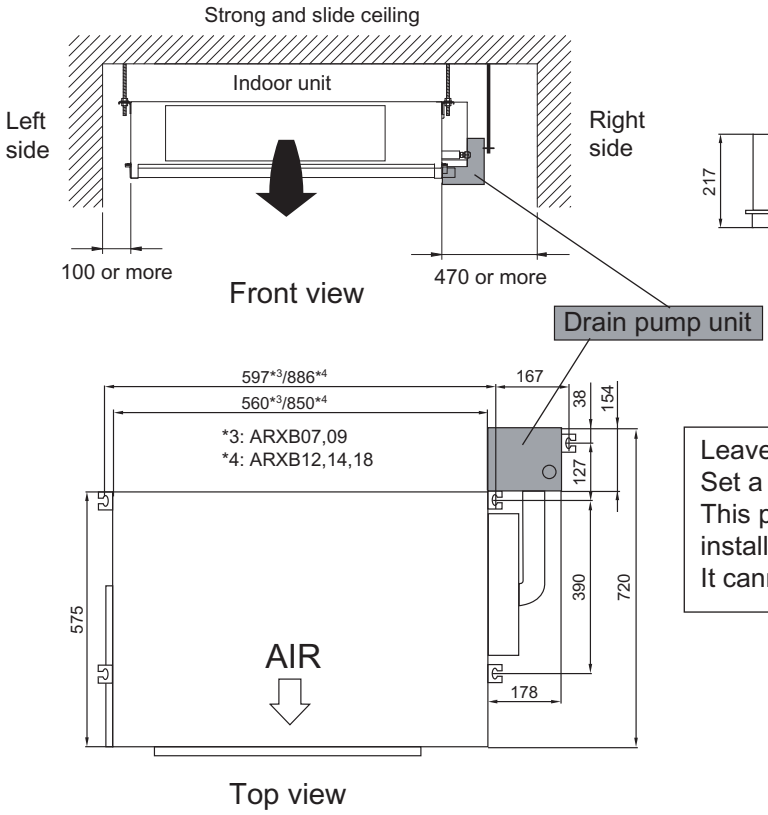

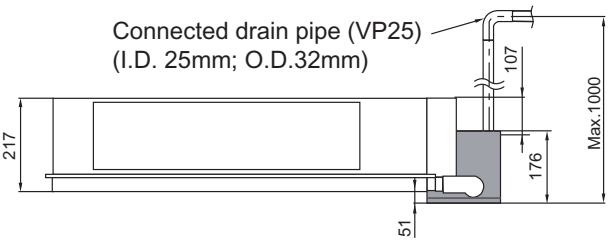

Leave the space required to service the unit.
Set a maintenance hole near the drain pump unit.
This product is specially designed for ceiling concealed installation of the indoor unit.
It cannot be connected when it is installed on the floor.

SYSTEM DESIGN

SYSTEM DESIGN

● Installing drain pump unit

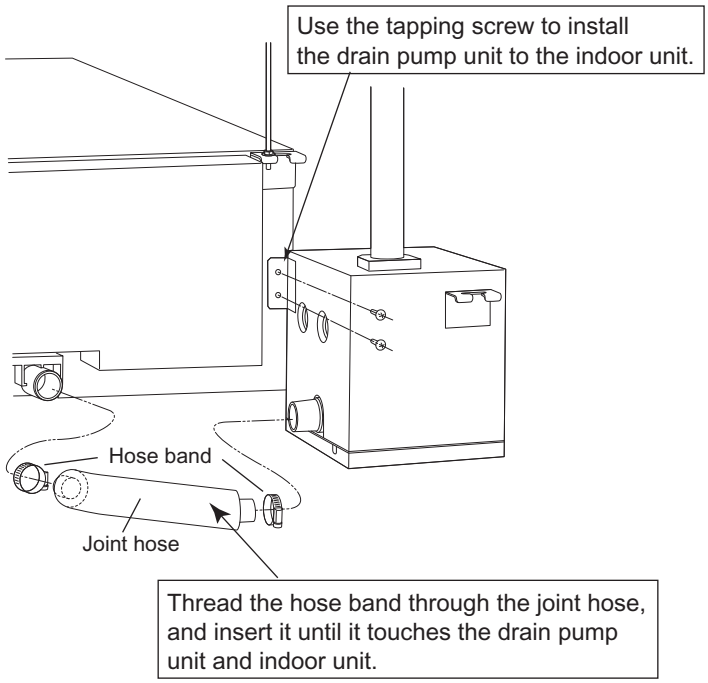

When there is no screw hole

Puncture holes at the following position and then install.

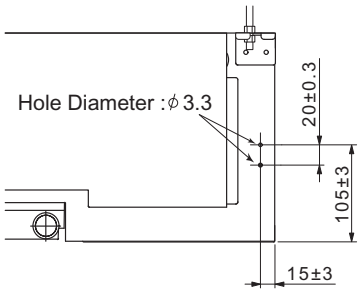

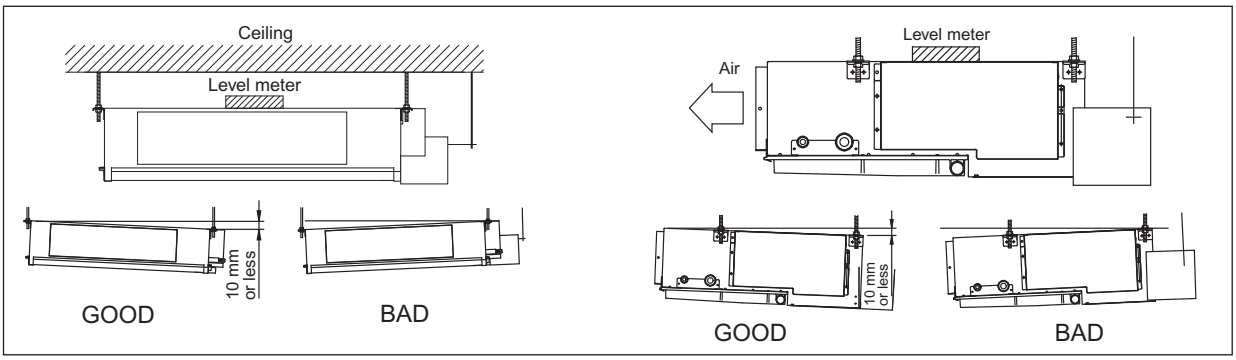

● Installing hose

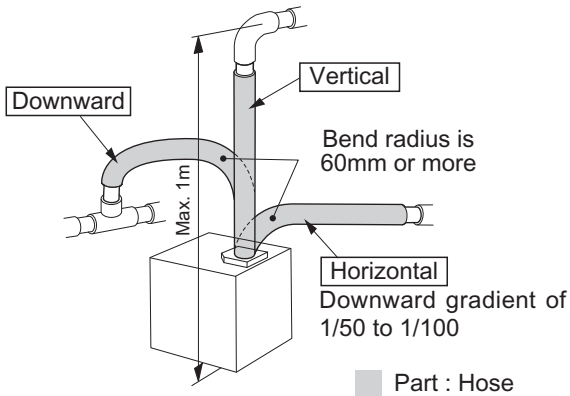

Example of wrong construction

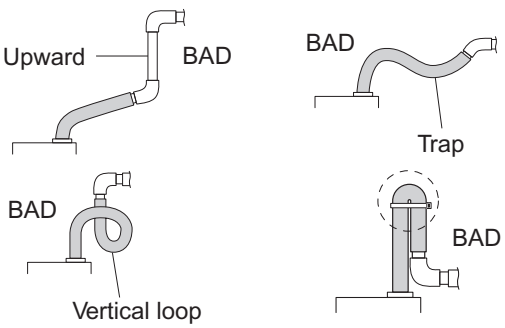

SYSTEM DESIGN

● Installing pipe

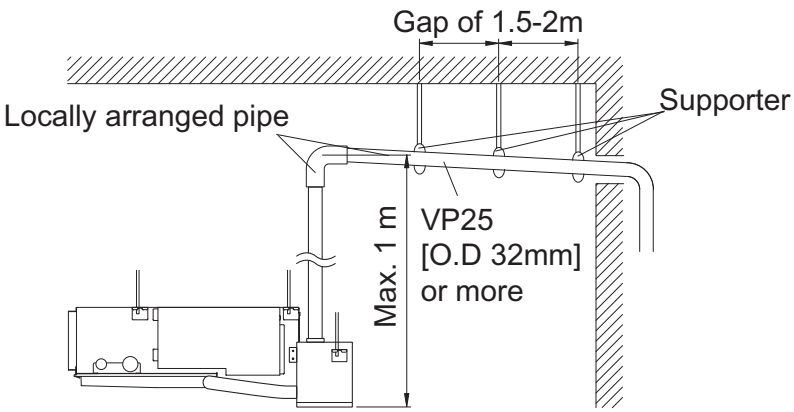

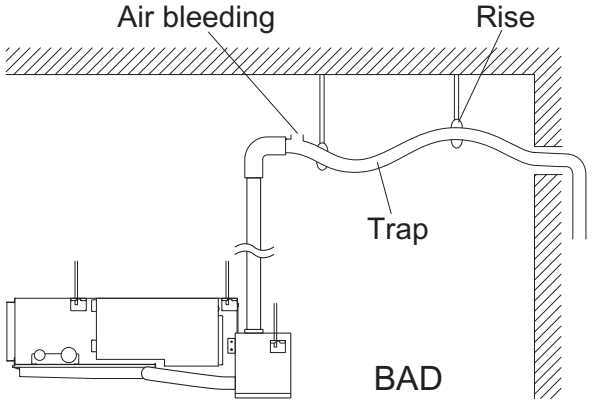

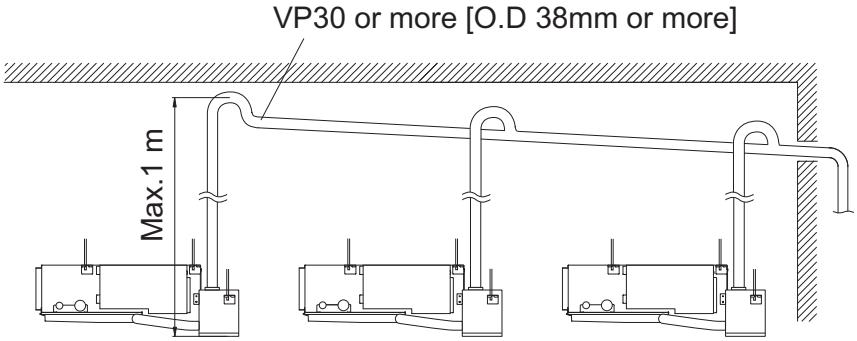

Observe the following procedures to construct centralized drain pipe fittings.

SYSTEM DESIGN

● Electrical wiring

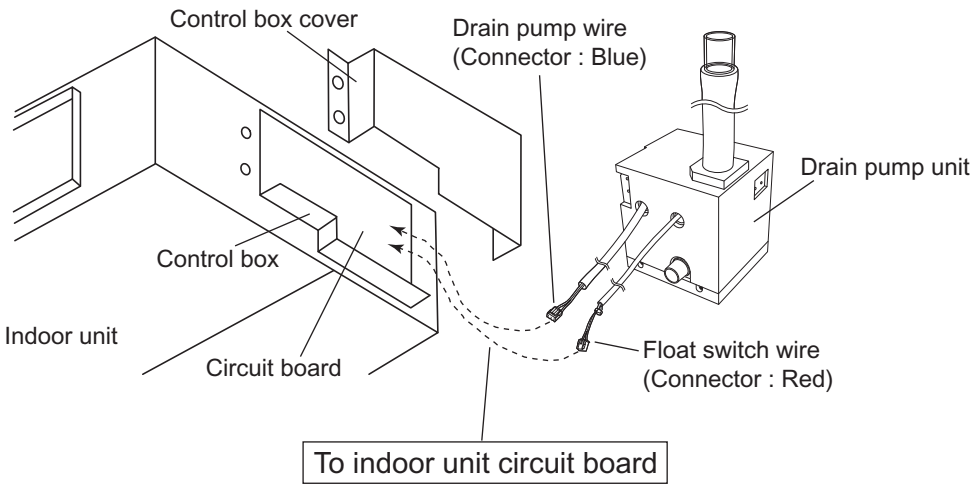

■ MODEL : UTZ-PX1NBA

● Specifications

	Unit	Specifications
Height of drain up	mm	Maximum 1000
Power source	-	220 - 240V, 50 - 60Hz
Power input (230V, 50Hz/60Hz)	W	12 / 10.8
Current (230V, 50Hz/60Hz)	mA	114 / 92
Dimensions (H x W x D)	mm	176 x 178 x 154
Weight	kg	2.5
Connection pipe diameter	-	VP25 (I.D. 25mm, O.D. 32mm)
Direction of pipe connection *1	-	360°
Angle of pipe connection *2	-	0° (Horizontal) - 90°(Vertical)
Control method	-	Control board of Indoor unit
Safety device	-	Float switch, Thermal fuse

*1 Direction of pipe connection

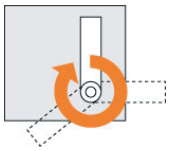

*2 Angle of pipe connection

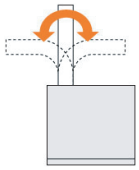

● Application indoor units

Type	Model
Low Static Pressure Duct	ARXB25, ARXB30, ARXB36, ARXB45
Duct	ARXA25, ARXA30, ARXA36, ARXA45

● Mounting position

(Unit : mm)

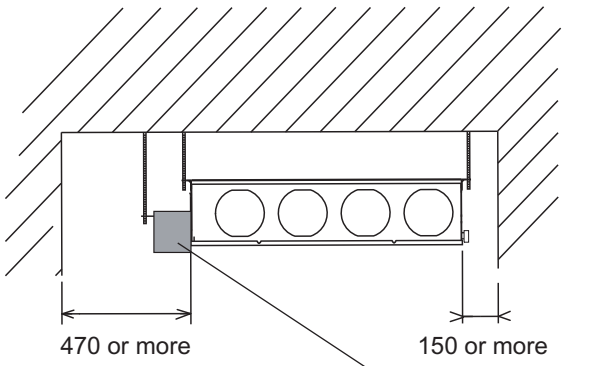

Front view

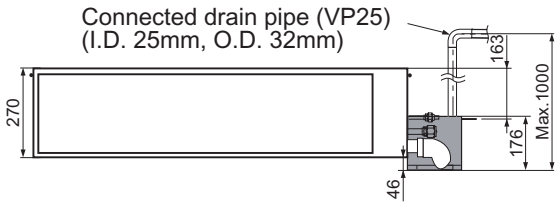

Back view

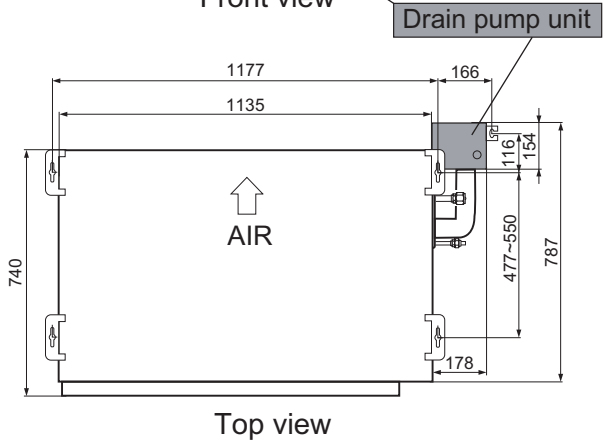

Top view

Leave the space required to service the unit.
Set a maintenance hole near the drain pump unit.

SYSTEM DESIGN

● Installing drain pump unit

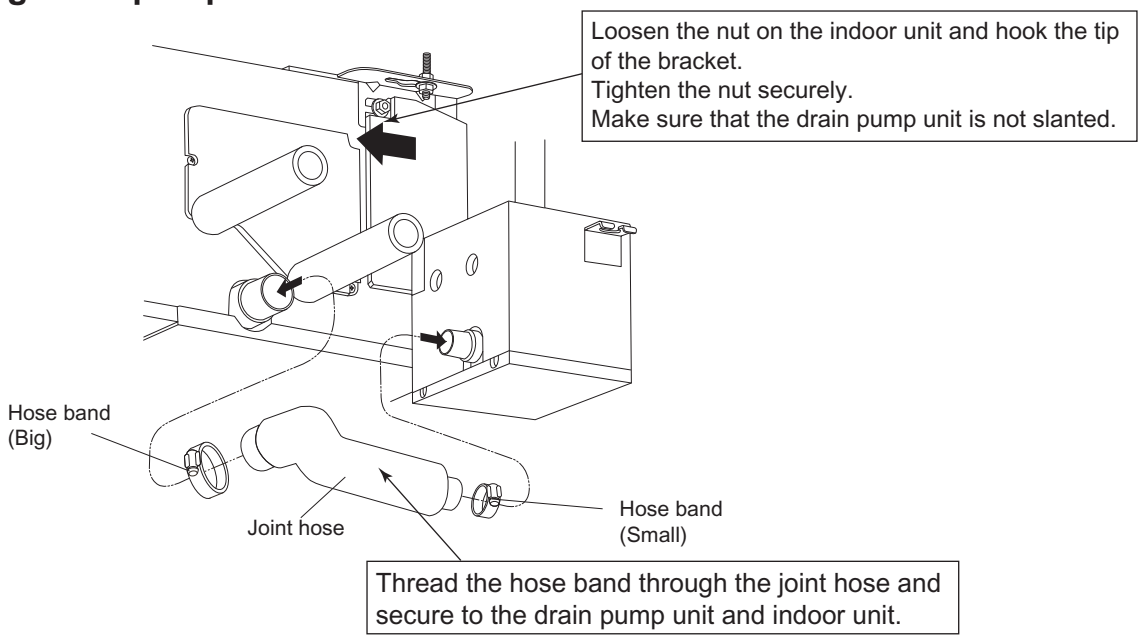

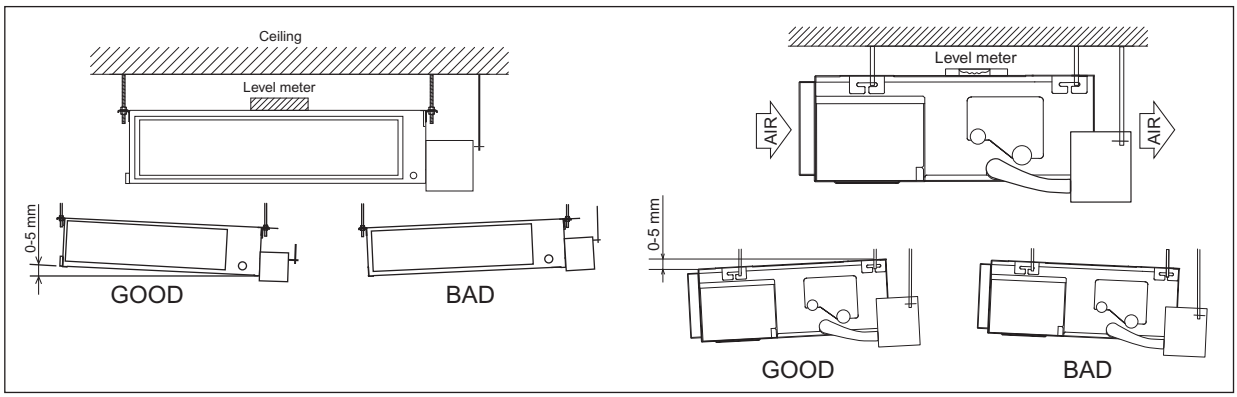

SYSTEM DESIGN

● Installing hose

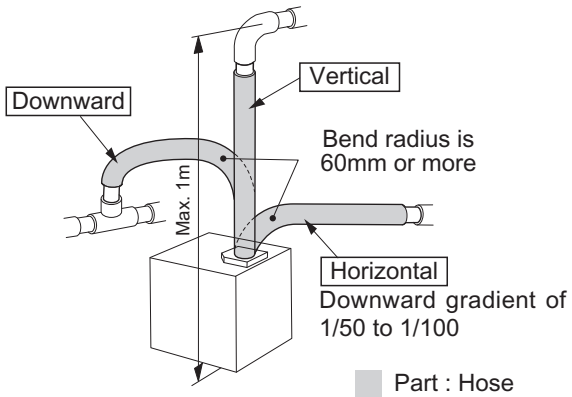

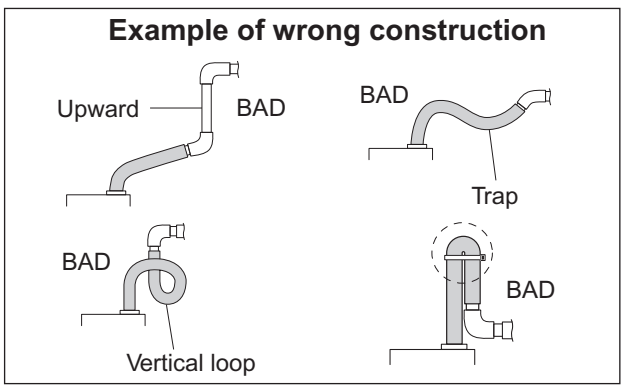

● Installing pipe

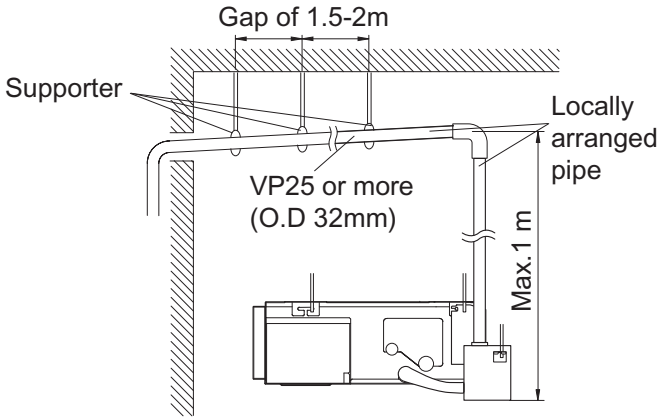

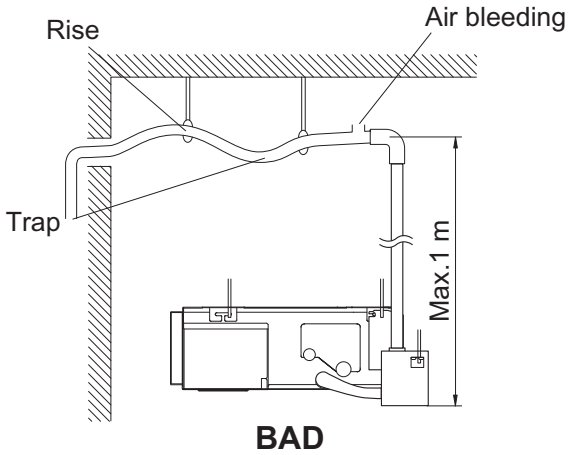

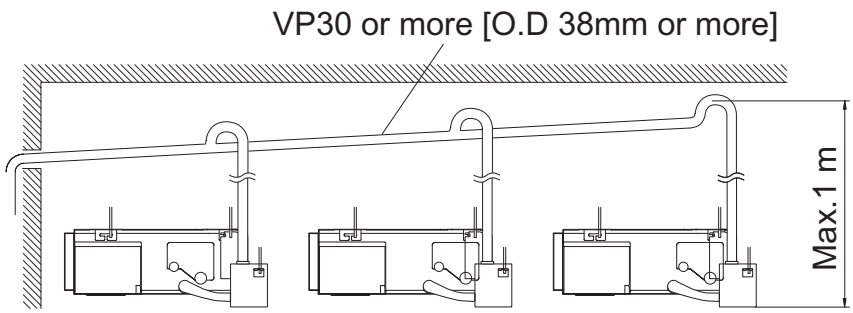

Observe the following procedures to construct centralized drain pipe fittings.

SYSTEM DESIGN

● Electrical wiring

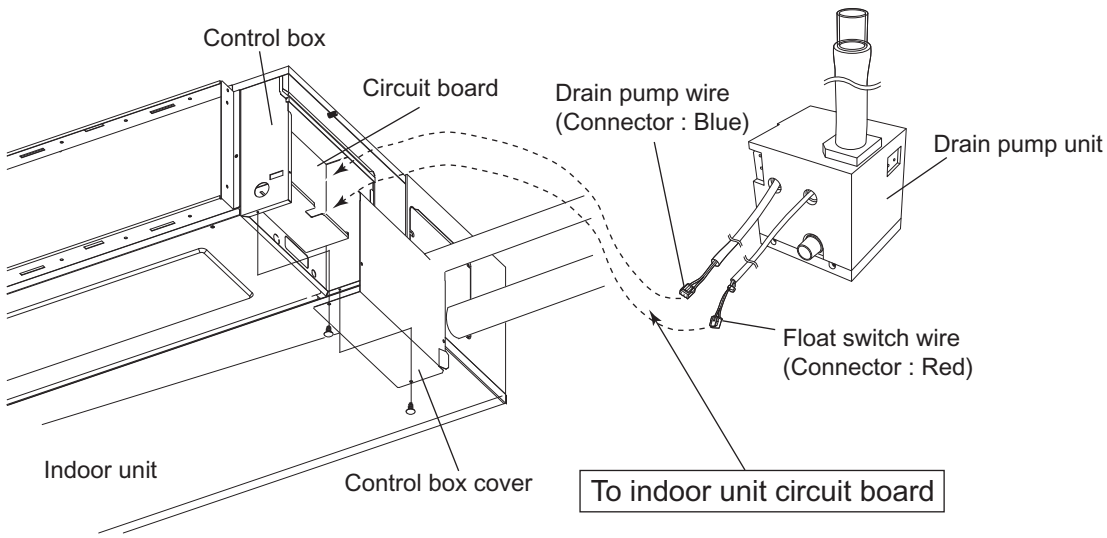

■ MODEL : UTR-DPB24T

● Application indoor units

Type	Model
Ceiling	AB∗A30, AB∗A36, AB∗A45, AB∗A54

● Installing drain pump unit & Electrical wiring

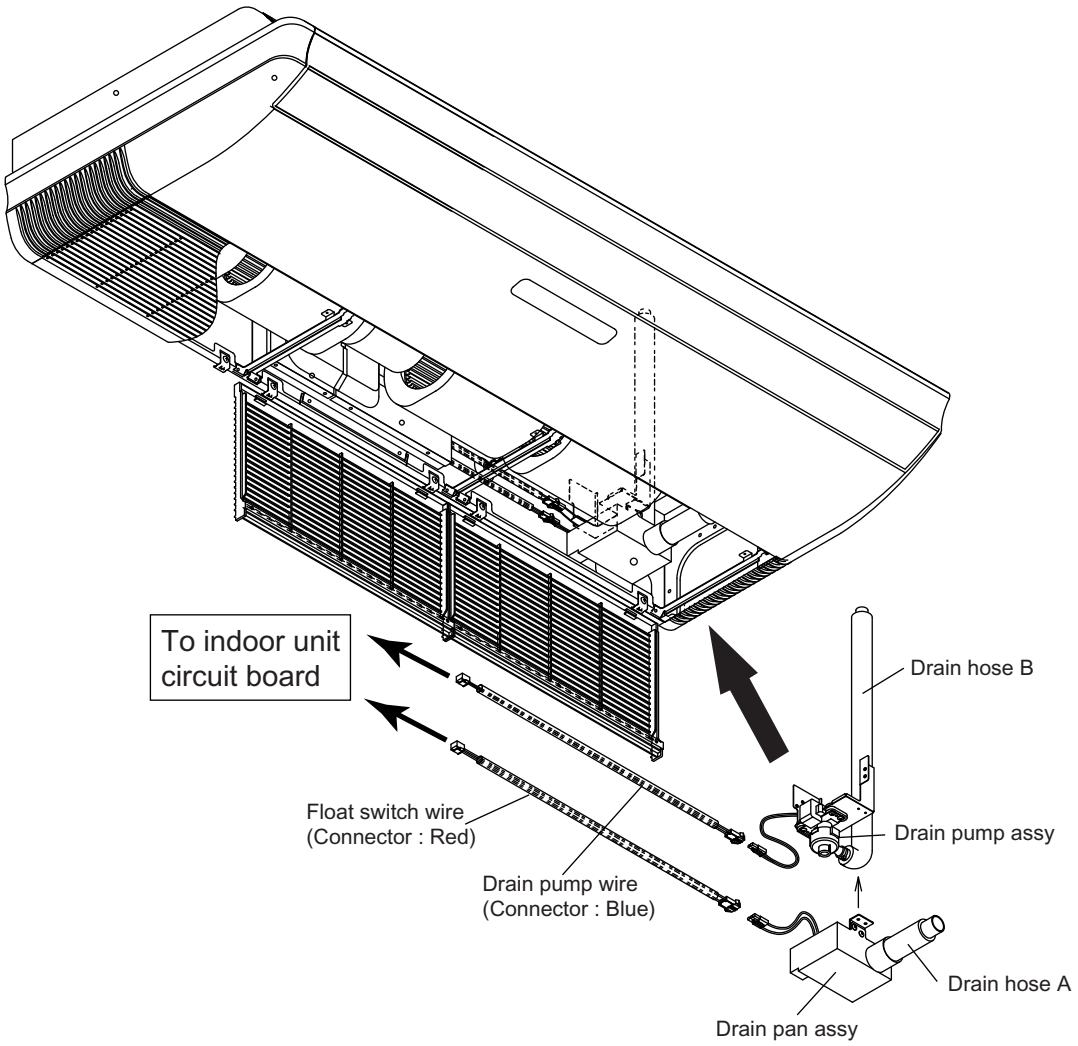

● Installing pipe

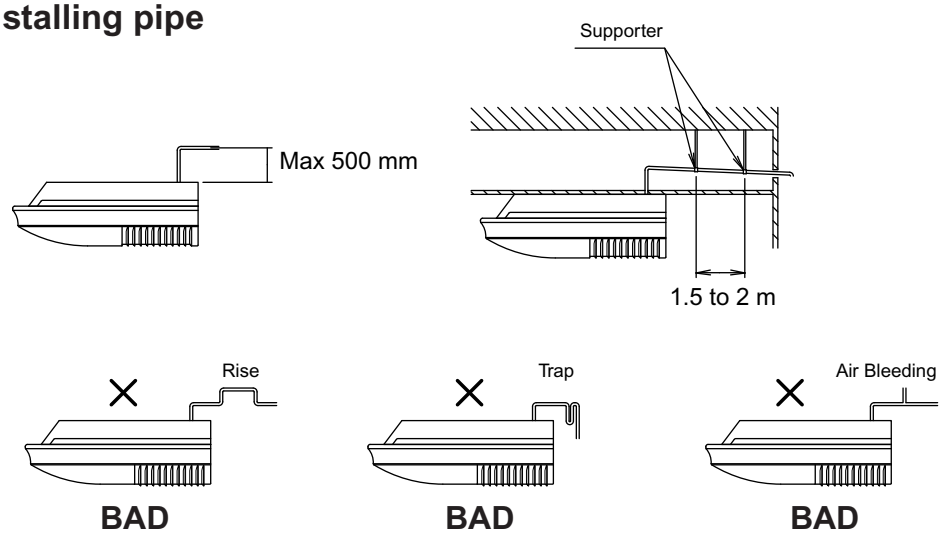

SYSTEM DESIGN

6-9. STANDARD ACCESSORIES

6-9-1. OUTDOOR UNIT

The following installation parts are supplied. Use them as required.
Do not discard any accessories until the installation work has been completed.

Description	Q'ty	Application
Drain pipe 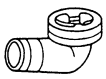	3	For outdoor unit drain piping work (Heat pump model only)
Gasket	1	Installation between flange joint assembly and 3-way valve
Joint pipe	1	For connecting the pipe
Flange joint assembly 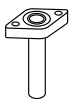	1	For connecting the pipe

Description	Q'ty	Application
Terminal resistor	1	Install it on the board of the outdoor unit (master unit only).
Coupler heat insulation	1	For outdoor side pipe joint
Binder C 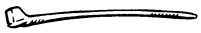	1	For transmission cable binding

SYSTEM DESIGN

6-9-2. INDOOR UNIT

■COMPACT CASSETTE TYPE

INDOOR UNIT ACCESSORIES

Name and Shape	Q'ty	Name and Shape	Q'ty	Name and Shape	Q'ty
Coupler heat insulation (Large)	1	Template 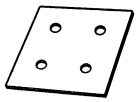	1	Special nut A (Large flange)	4
Coupler heat insulation (Small) 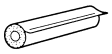	1	Binder	Small 2	Special nut B (Small flange)	4
Wire cover 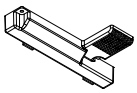	1		Large 4	Tapping screw (ϕ4 x 14)	2
Adapter 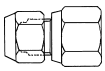 Use as needed ϕ12.7-ϕ9.52 (AU07/09) ϕ9.52-ϕ6.35 (AU18)	1				

GRILLE ACCESSORIES

Name and Shape	Q'ty	Name and Shape	Q'ty	Name and Shape	Q'ty
Bolt 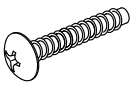	4	Washer	4	Blower cover insulation	2

■CASSETTE TYPE

Name and Shape	Q'ty	Application
Binder (Laege)	4	For fixing the connection pipe (Large and Small)
Binder (Medium)	1	For power supply and transmission cord binding.
Binder (Small)	1	For remote control cord binding.
Coupler heat insulation (Small)	1	For indoor side pipe joint (Small)
Coupler heat insulation (Large) 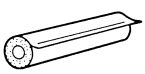	1	For indoor side pipe joint (Large)
Adapter 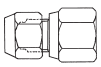	1	Use as needed ϕ9.52-ϕ6.35 (AU∗A20/25)

Name and Shape	Q'ty	Application
Special nut A (Large flange)	4	For suspending the indoor unit from ceiling.
Special nut B (Small flange)	4	
Template 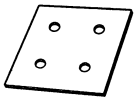	1	For suspending the indoor unit from ceiling.
Blower cover insulation	2	Use for static pressure more than 40 Pa.
Hook wire 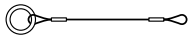	2	For installing intake grille.

SYSTEM DESIGN

SYSTEM DESIGN

■ COMPACT DUCT TYPE

Name and Shape	Q'ty	Application
Installation template 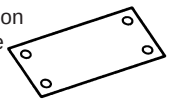	1	For positioning the indoor unit
Hanger 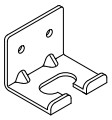	4	For suspending the indoor unit from ceiling
Tapping screw (ϕ4 x 10)	8	For installing the hanger
Special nut A M10 Large flange	4	For suspending the indoor unit from ceiling
Special nut B M10 Small flange	4	
Coupler heat insulation (large) 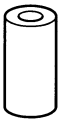	1	For indoor side pipe joint (large pipe)
Coupler heat insulation (small) 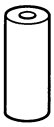	1	For indoor side pipe joint (small pipe)

Name and Shape	Q'ty	Application
Binder 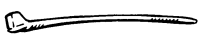	Small 2	For transmission and remote control cord binding.
	Medium 1	For power supply cord binding.
	Large 4	For fixing the coupler heat insulation.
Filter 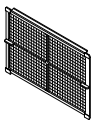	2 (AR7/9)	
	3 (AR12/ 14/18)	
Drain pipe insulation 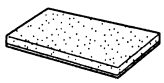	1	Insulates the drain hose and vinyl hose connection
Adapter 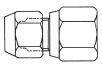	1	Use as needed ϕ12.7- ϕ9.52 (AR7/9) ϕ9.52- ϕ6.35 (AR18)
Wire 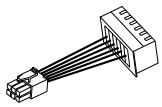	1	Use for static pressure more than 25 Pa.
Insulation (outlet) 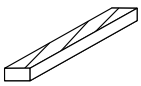	2 (Small)	For outlet flange
	2 (Large)	

■ DUCT TYPE

Name and Shape	Q'ty	Application
Binder (Large)	5	For fixing the connection pipe (Large and Small) and drain cap
Binder (Medium)	2	For power supply and transmission, remote control cord binding
Binder (Small)	2	For transmission and remote control cord binding
Coupler heat insulation (Small) 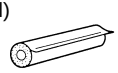	1	For indoor side pipe joint (Small)
Coupler heat insulation (Large) 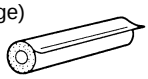	1	For indoor side pipe joint (Large)
Adapter 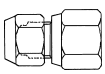	1	Use as needed ϕ9.52- ϕ6.35 (ARXA25L/ ARXB25L)

Name and Shape	Q'ty	Application
Special nut A (Large flange)	4	For suspending the indoor unit from ceiling
Special nut B (Small flange)	4	
Hanger	4	For suspending the indoor unit from ceiling
Drain hose insulation 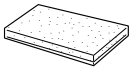	1	Insulates the drain hose and vinyl hose
Wire	1	Attached only ARXB25/ 30/36/45L model. Use for static pressure more than 40 Pa.

SYSTEM DESIGN

■ HIGH STATIC PRESSURE DUCT TYPE

Name and Shape	Q'ty	Application
Binder (Large)	4	For fixing the connection pipe (Large and Small)
Binder (Medium)	1	For power supply cord binding
Binder (Small)	2	For transmission and remote control cord binding
Coupler heat insulation (Small) 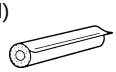	1	For indoor side pipe joint (Small)
Coupler heat insulation (Large) 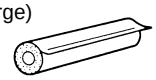	1	For indoor side pipe joint (Large)

Name and Shape	Q'ty	Application
Special nut A (Large flange)	4	For suspending the indoor unit from ceiling
Special nut B (Small flange)	4	
Washer ※ Only for ARXC90	8	

SYSTEM DESIGN

■ FLOOR / CEILING TYPE

Description	Q'ty	Application
Cover plate (left)	1	
Cover plate (right)	1	
Tapping screw (ϕ4 x 10)	2	
Installation template 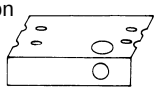	1	For positioning the indoor unit For under ceiling type
Bracket (left) 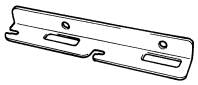	1	For suspending the indoor unit from ceiling
Bracket (right) 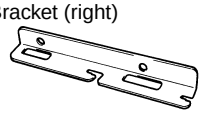	1	
Anchor bolt (M12) 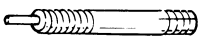	4	
Spring washer	4	
Special nut	4	
Wall bracket	2	For suspending the indoor unit on the wall

Description	Q'ty	Application
Tapping screw (ϕ4 x 20) 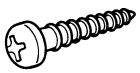	6	For fixing the wall bracket
Coupler heat insulation	2	For indoor side pipe joint
Adapter 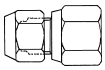	1	AB 18/24 ONLY Use as needed ϕ9.52 -ϕ6.35
Binder 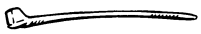	Large 4	For fixing the coupler heat insulation
	Medium 1	For fixing the drain hose
	Small 2	For power supply, transmission and remote control cord binding
Drain hose 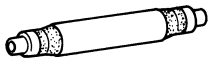	1	
Insulation (drain hose) 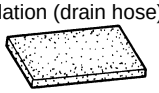	1	Adhesive type 70 x 230
VT wire	1	For fixing the drain hose L 280 mm
Insulation (pipe) 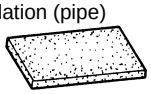	1	Adhesive type 160 x 110
Silencer pipe 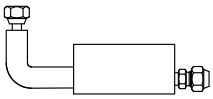	1	

OPTIONAL PARTS FOR INDOOR UNIT

Description	Part No.	Application
Auxiliary pipe	9374714018	For indoor side pipe joint (18,000 and 24,000 BTU/h model)

SYSTEM DESIGN

SYSTEM DESIGN

■ CEILING TYPE

Description	Q'ty	Application
Drain hose insulation	1	Adhesive type 70 x 230
VT wire 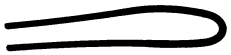	1	For fixing the drain hose L 280 mm
Coupler heat insulation (large)	2	For indoor side pipe joint (large pipe)
Coupler heat insulation (small)	1	For indoor side pipe joint (small pipe)
Binder 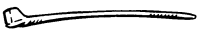	Extra large 4	For fixing the coupler heat insulation
	Large 4	
	Medium 1	For power supply cord binding
	Small 2	For transmission and remote control cord binding

Description	Q'ty	Application
Special nut A (large flange)	4	For installing indoor unit
Special nut B (small flange)	4	For installing indoor unit
Installation template 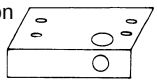	1	For positioning the indoor unit
Auxiliary pipe assembly	1	For connecting the piping

■ COMPACT WALL MOUNTED TYPE

Name and Shape	Q'ty	Application
Wall hook bracket 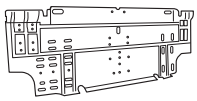	1	For indoor unit installation
Binder	1	For remote control cord binding
Cloth tape	1	For indoor unit installation
Tapping screw 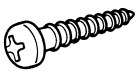	8	For wall hook bracket installation
Adapter 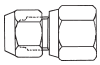	1	Use as needed ϕ12.7-ϕ9.52 (AS7/9)

Name and Shape	Q'ty	Application
Wire assebly 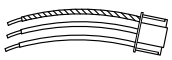	1	For wired remote control installation
Air cleaning filter 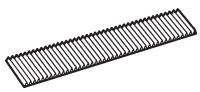	2	
Air cleaning filter frame 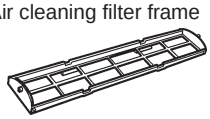	2	
Seal A	1	For indoor unit installation

SYSTEM DESIGN

■ WALL MOUNTED TYPE

Name and Shape	Q'ty	Name and Shape	Q'ty
Wall hook bracket 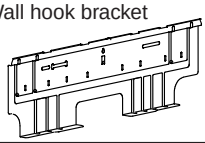	1	Tapping screw (big) (ϕ4 x 20) 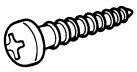	12
Adapter 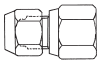 Use as needed ϕ9.52 -ϕ6.35 (AS18/24)	1	Insulation (Drain hose) 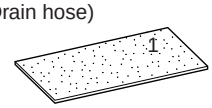	1

■ CEILING WALL TYPE

Name and Shape	Q'ty	Name and Shape	Q'ty	Name and Shape	Q'ty
Wall hook bracket 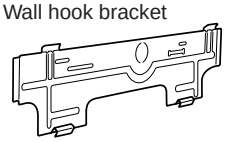	1	Tapping screw (big) (ϕ4 × 20) 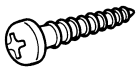	12	Adapter 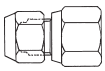 Use as needed ϕ12.7-ϕ9.52 (AW7/9) ϕ9.52-ϕ6.35 (AW18/24)	1
Drain hose 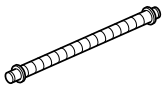	1	Insulation (Drain hose) 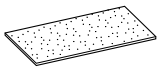	1		

SYSTEM DESIGN

SYSTEM DESIGN

6-10. REFRIGERANT LEAKAGE CAUTION

The installer and system specialist shall secure safety against leakage according to local regulations or standards. The following standards may be applicable if local regulations are not available.

6-10-1. INTRODUCTION

Our V series air conditioners use R410A as refrigerant. Though R410A is harmless and incombustible in itself, the room in which the air conditioner is installed should be large enough that the refrigerant gas will not exceed the concentration limit even if the refrigerant gas leaks.

• Concentration limit

Concentration limit is the limit of Freon gas concentration where immediate measures can be taken without hurting the human body when refrigerant leaks in to the air. The concentration limit shall be described in units of Kg/m^3(Freon gas weight in per m^3air) to facilite calculation.

Concentration limit : 0.3kg/m^3

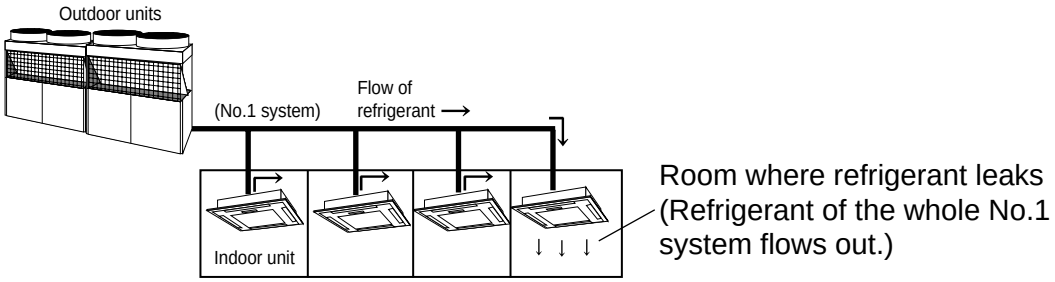

SYSTEM DESIGN

6-10-2. CHECKING CONCENTRATION LIMIT

Check concentration limit following steps ① ~ ② , and take appropriate measures depending on the situation.

① Calculate amount of all replenished refrigerant (kg) per refrigerant system.

Amount of replenished refrigerant per refrigerant system	+	Amount of additional replenished refrigerant	=	Total amount of replenished refrigerant in refrigerant system (kg)
Amount of replenished refrigerant at factory shipment		Amount of additionally replenished refrigerant depending on piping length , piping diameter and indoorunit model at customer.		

Note : When one refrigerant system is divided into 2 or more refrigerant systems and each system is independent, total amount of replenished refrigerant of each system shall be adopted.

② Smallest room volume.
Calculate room volume by regarding ▭ portion as one room or the smallest room.

(a) Without partition

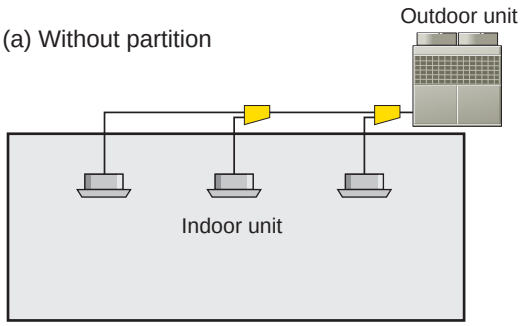

(b) When there are partitions,but there is an effective opening for ventilation between the rooms.

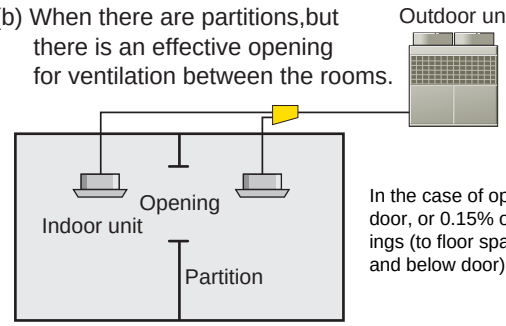

In the case of opening without door, or 0.15% or more openings (to floor space) both above and below door).

(c) With partition and without opening which serve as passage of air to adjoining room.

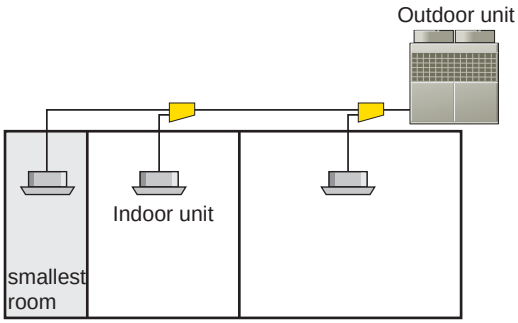

(d) When a mechanical ventilation device linked to a gas leak detection warning device is mounted in the smallest room. The room with the second smallest area is the target.

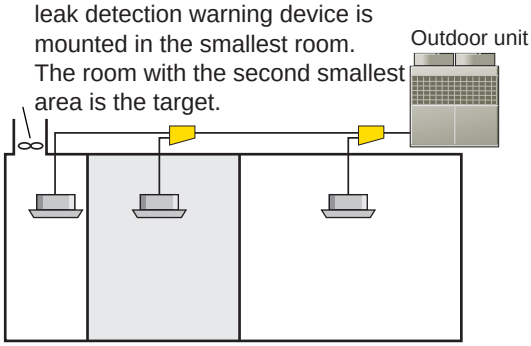

③ Calculate refrigerant concentration from the results of ①and②

$$\frac{\text{Total amount of replenished refrigerant in refrigerant facility(kg)}}{\text{Capacity of smallest room where indoor unit is installed(m}^3\text{)}} \leq \text{Refrigerant concentration(kg/m}^3\text{)}$$

(R410A)

When the result of calculation exceeds the limiting concentration,perform the same calculations by shifting to the second smallest,and the third smallest rooms until the final result is below the limiting concentration.

SYSTEM DESIGN

SYSTEM DESIGN

When concentration limit is exceeded

When the concentration limit is exceeded,change the original plan or take one of the countermeasures shown below.

- Countermeasure 1
  Provide opening for ventilation.
  Provide 0.15% or more opening to floor space both above and below or provide opening without door.

- Countermeasure 2
  Reduce the total refrigerant charging amount of the refrigerant equipment

  (1) Shorten the length of the refrigerant pipes
  Move the location of the outdoor unit closer to the indoor unit, and reduce the total refrigerant charging amount by shortening the length of the refrigerant pipes.

  (2) Lower the capacity of the outdoor unit.
  Separate the outdoor unit into multiple units to lower the outdoor unit capacity for each refrigerant system and reduce the refrigerant charging amount.

  For example, by changing a 20HP × 1 unit system to a 10HP × 2 units system the refrigerant amount for each refrigerant system can be reduced by about half.

- Countermeasure 3
  Provide gas leak alarm linked with mechanical ventilator.

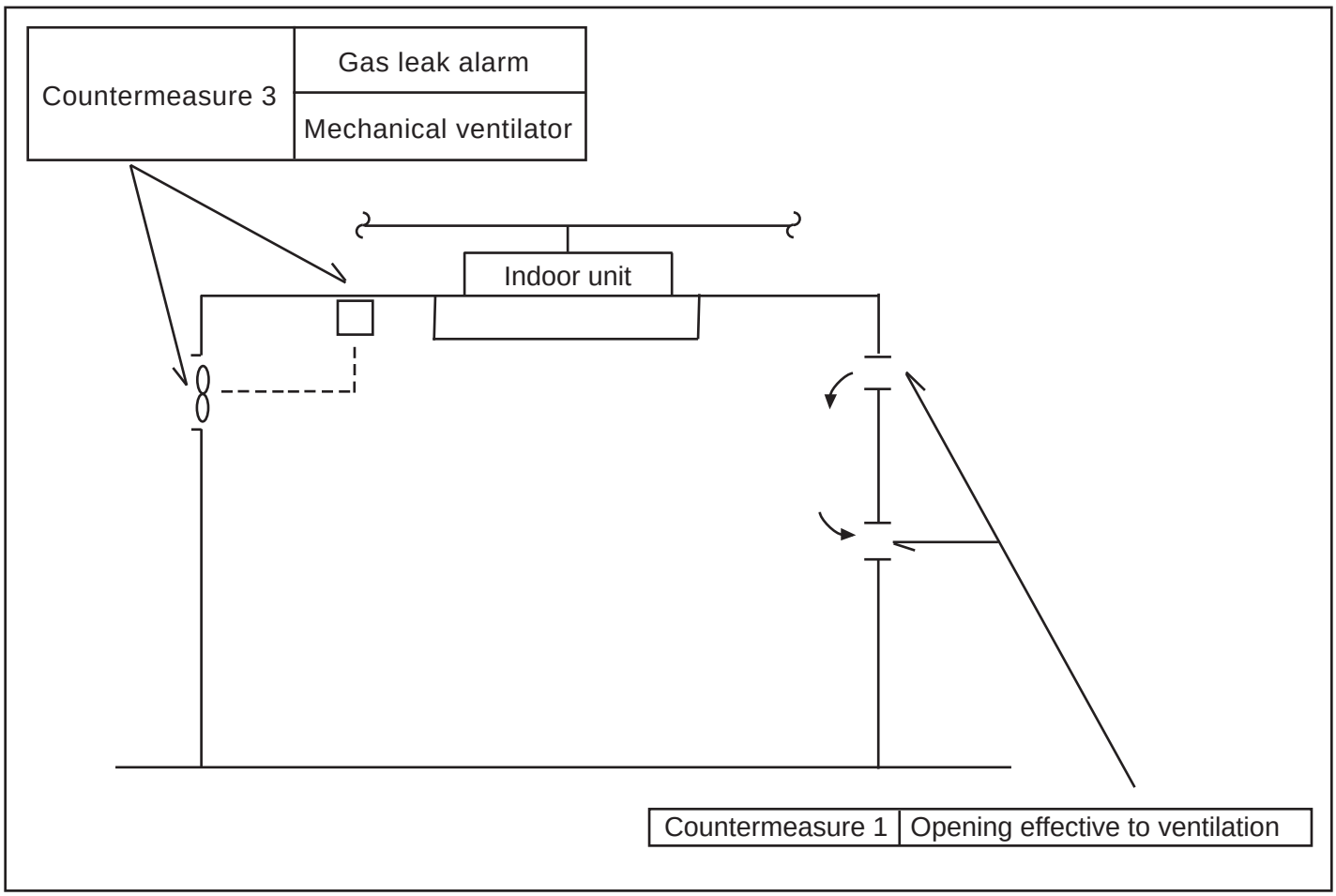

Pay special attention to the place, such as a basement, etc. When refrigerant can accummalate, since refrigerant is heavier than air.

SYSTEM DESIGN

6-11. COMPATIBILITY OF VRF SYSTEM

■COMPATIBILITY OF OUTDOOR UNIT AND INDOOR UNIT

● OUTDOOR UNIT AND INDOOR UNIT

Compatibility of outdoor unit and indoor unit in refrigerant system as follows.

✳"V series outdoor unit" and "S series indoor unit" are not allowed to connect.

			Indoor unit	
			V series	S series
Outdoor unit	V series	Heat Pump Cooling Only	○ OK	× NO GOOD
	S series	Heat Pump Cooling Only	○ OK	○ OK
		Heat Recovery	○ OK	○ OK

Applicable S series outdoor unit

HEAT PUMP, COOLING ONLY : MODEL CHANGE CODE "C"

HEAT RECOVERY : MODEL CHANGE CODE "B" or "C"

Applicable S series Indoor unit

MODEL CHANGE CODE "C" or later

● EXAMPLE CASES FOR COMPATIBILITY

	OUTDOOR UNIT	INDOOR UNIT	
CASE 1	V series	V series	○ OK
CASE 2	V series	S series	× NO GOOD
CASE 3	S series	V series	○ ✳1 OK
CASE 4	S series	S series	○ OK

✳Due to higher design pressure of V series(R410A) , S series indoor units has not permitted to connect V series outdoor unit.

✳1 • Following model of V series indoor unit can not be connected to S series outdoor unit.
ARXC90 High static pressure duct model.

• Following model of V series indoor unit can not be connected to S series Heat Recovery outdoor unit.
AS*E07,09,12,14 Compact wall mounted model.

SYSTEM DESIGN

■COMPATIBILITY OF CONTROLLER SYSTEM

Following model can be used for V series system.

				MODEL
CONTROLLER	CENTRAL CONTROL	PC Controller	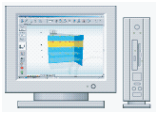	UTR-YOTB
		Central Remote Controller		UTB-∗CA
		Group Remote Controller		UTB-∗DB
	INDIVIDUAL CONTROL	Wired Remote Controller		UTB-∗UB
		Simple Remote Controller (with master control)		UTB-∗PB
		Simple Remote Controller (without master control)		UTB-∗RA
		Wireless Remote Controller		UTB-∗VB
CONVERTOR		BACnet Gateway (Software)	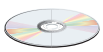 CD-ROM (Software) Software protection key	UTR-YLBA
		Network Convertor for LONWORKS		UTR-YLLA
		Signal Amplifier		UTR-YRPC
		Network Convertor		UTR-YRDA
		External Switch Controller		UTR-YESA
SERVICE & MAINTENANCE		SERVICE Tool		UTR-YSTC Ver 3.2 or later
		Web Monitoring Tool		UTR-YMSA Ver 3.2 or later

∗ Previous model of above table is not applicable for V series.

SYSTEM DESIGN

Refrigerant R410A
INVERTER

AIRSTAGE™
V SERIES

7 . OPTIONAL PARTS

7-1. SEPARATION TUBE

■ CONNECTING CAPACITY

Separation tube	Total model code of indoor unit
UTR-BP090X / UTR-BP090L	90 or less
UTR-BP180X / UTR-BP180L	91 to 180
UTR-BP567X / UTR-BP567L	181 or more

90, 91, 180 and 181 are the total value for the indoor unit model code connected downstream.

UTR-BP090X / UTR-BP090L	UTR-BP180X / UTR-BP180L
Separation Tube (liquid pipe) 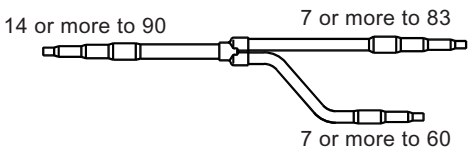 	Separation Tube (liquid pipe) 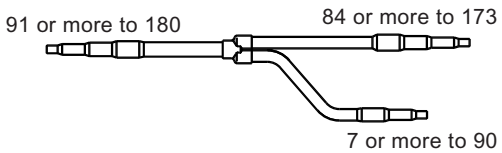
Separation Tube (gas pipe) 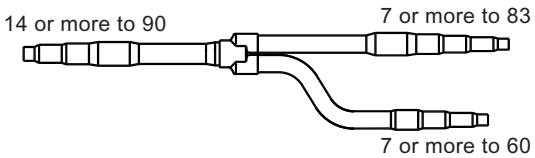 	Separation Tube (gas pipe) 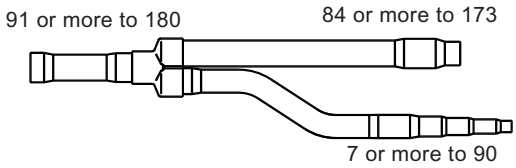

UTR-BP567X / UTR-BP567L
Description
Separation Tube (liquid pipe) 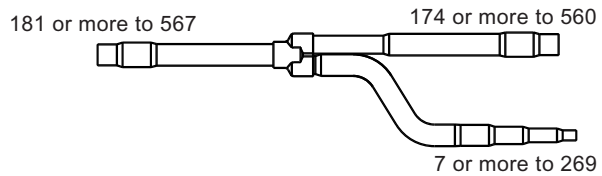
Separation Tube (gas pipe) 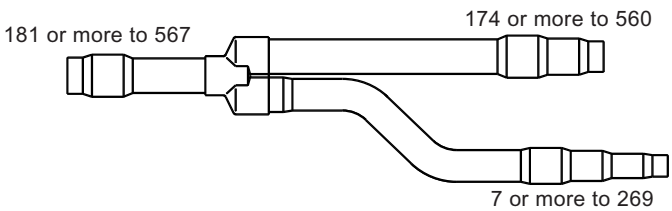

OPTIONAL PARTS

OPTIONAL PARTS

■ UTR-BP090X / UTR - BP090L

(UNIT: mm)

● Port diameters

Liquid pipe	Q'ty	Gas pipe	Q'ty
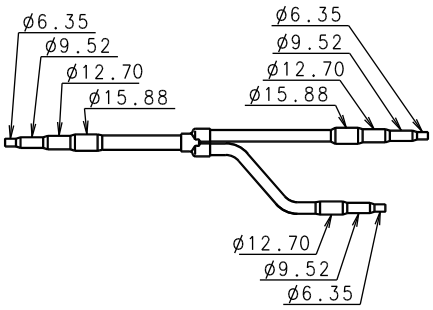	1	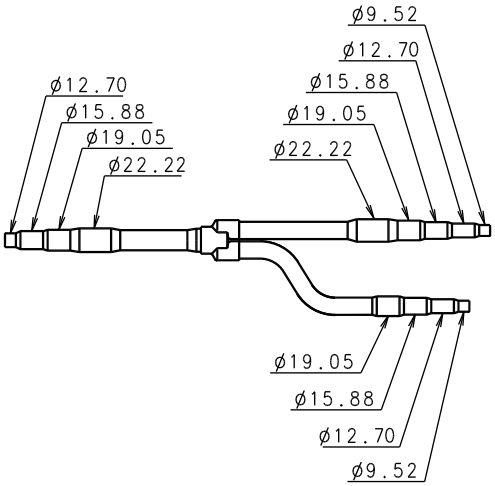	1

● Heat insulation

Heat insulation	Q'ty	Application
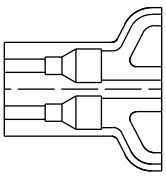	2	Large x 1 (for gas pipe) Small x 1 (for liquid type)

Tape	Q'ty
for UTR-BP090X only	8

Binder	Q'ty
for UTR-BP090L only	4

● Dimensions

Liquid pipe	Gas pipe
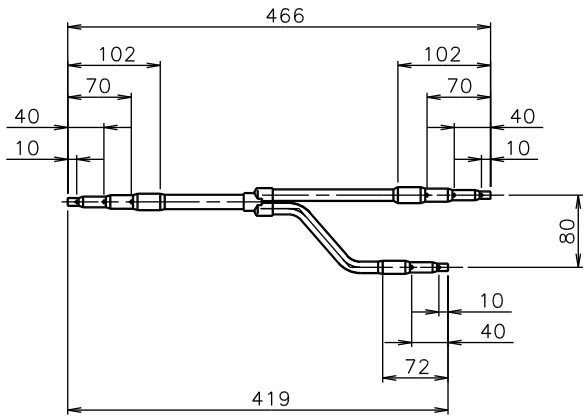	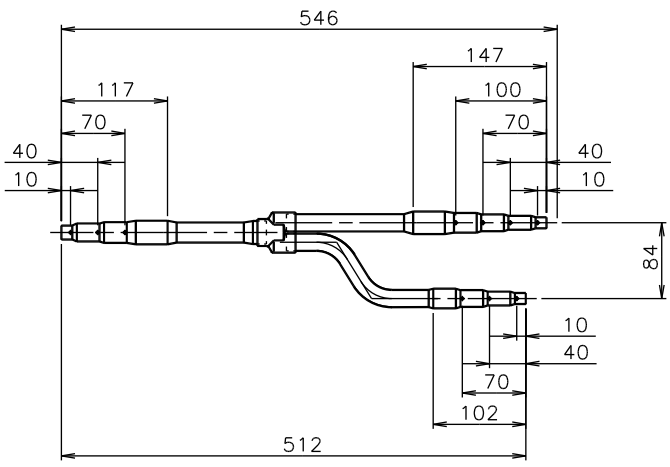

OPTIONAL PARTS

OPTIONAL PARTS

■ UTR-BP180X / UTR-BP180L

(UNIT: mm)

● Port diameters

Liquid pipe	Q'ty	Gas pipe	Q'ty
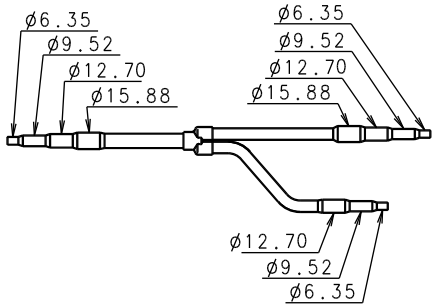	1	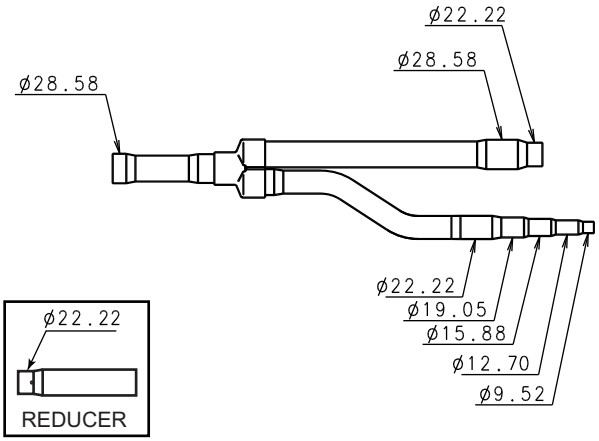	1

● Heat insulation

Heat insulation	Q'ty	Application
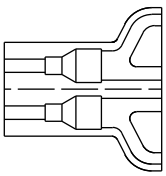	2	Large x 1 (for gas pipe) Small x 1 (for liquid type)

Tape	Q'ty
for UTR-BP180X only	8

Binder	Q'ty
for UTR-BP180L only	4

● Dimensions

Liquid pipe	Gas pipe
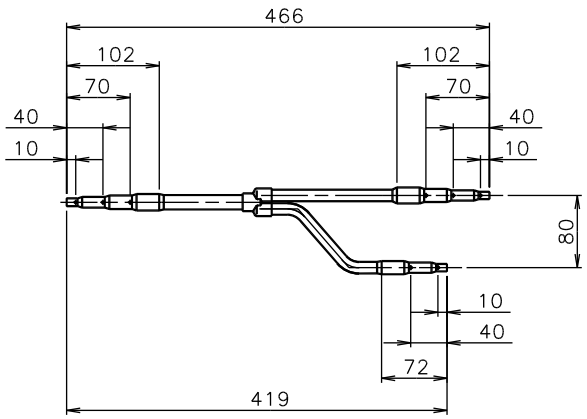	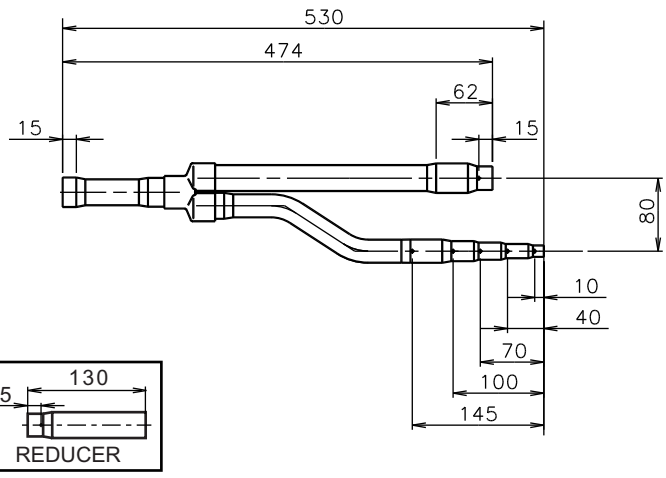

OPTIONAL PARTS

OPTIONAL PARTS

■UTR-BP567X / UTR-BP567L

(UNIT: mm)

● Port diameters

Liquid pipe	Q'ty	Gas pipe	Q'ty
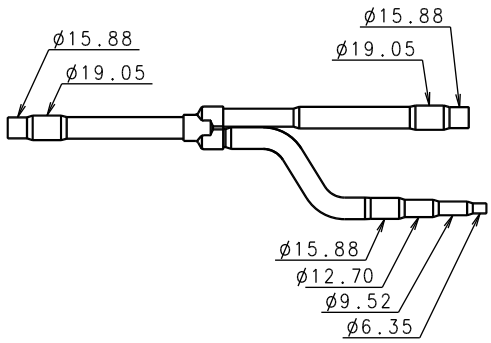	1	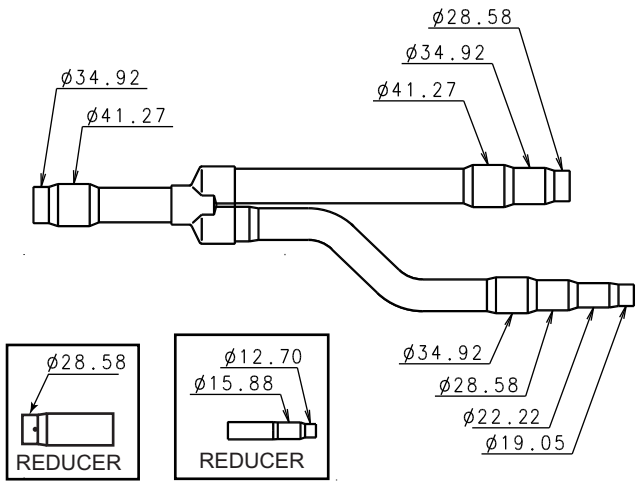	1

● Heat insulation

Heat insulation	Q'ty	Application
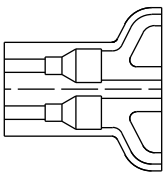	2	Large x 1 (for gas pipe) Small x 1 (for liquid type)

Tape	Q'ty
for UTR-BP567X only	8

Binder	Q'ty	Application
for UTR-BP567L only	4	Large x 2 (for gas pipe) Small x 2 (for liquid type)

● Dimensions

Liquid pipe	Gas pipe
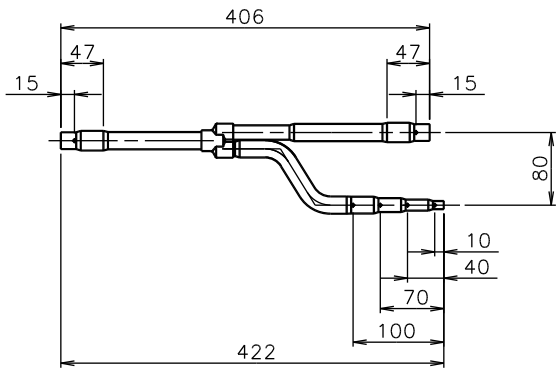	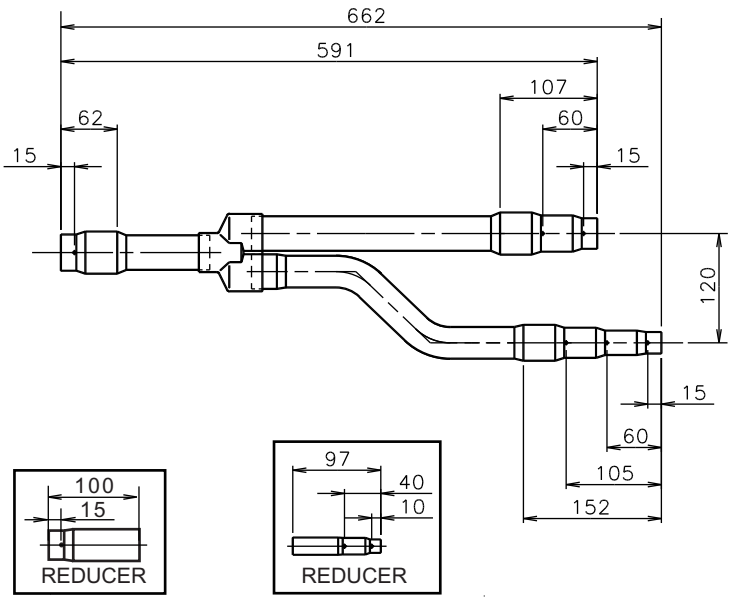

OPTIONAL PARTS

OPTIONAL PARTS

7-2. OUTDOOR UNIT BRANCH KIT

■ UTR-CP567X / UTR-CP567L

(UNIT: mm)

● Port diameters

Liquid pipe	Q'ty	Gas pipe	Q'ty
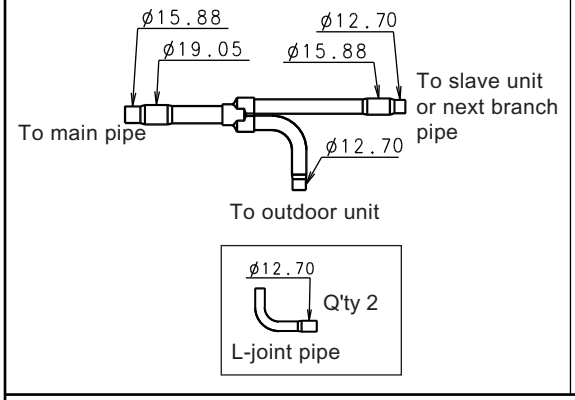	1	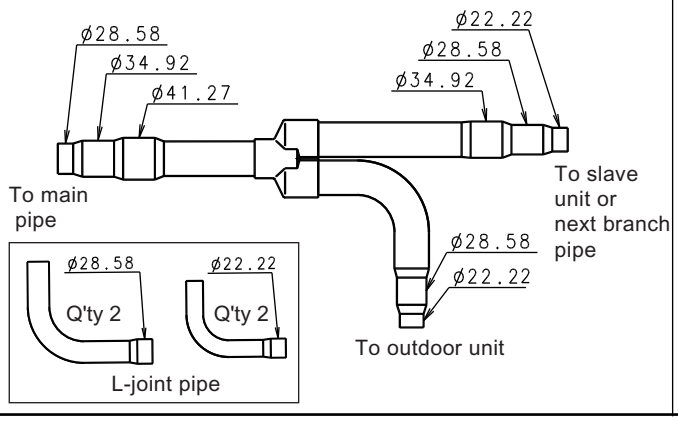	1

Oil joint pipe	Q'ty
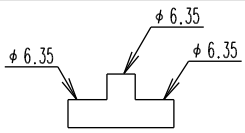	1

● Heat insulation

Heat insulation	Q'ty	Application
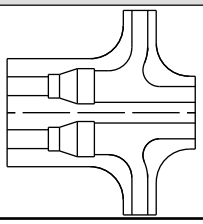	2	Large x 1 (for gas pipe) Small x 1 (for liquid type)

Tape	Q'ty
 for UTR-CP567X only	8

Binder	Q'ty	Application
 for UTR-CP567L only	6	Large x 3 (for gas pipe) Small x 3 (for liquid type)

● Dimensions

Liquid pipe	Gas pipe
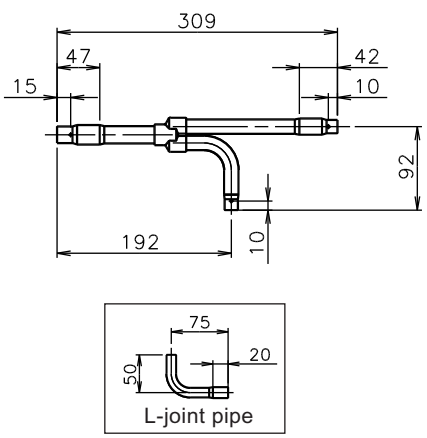	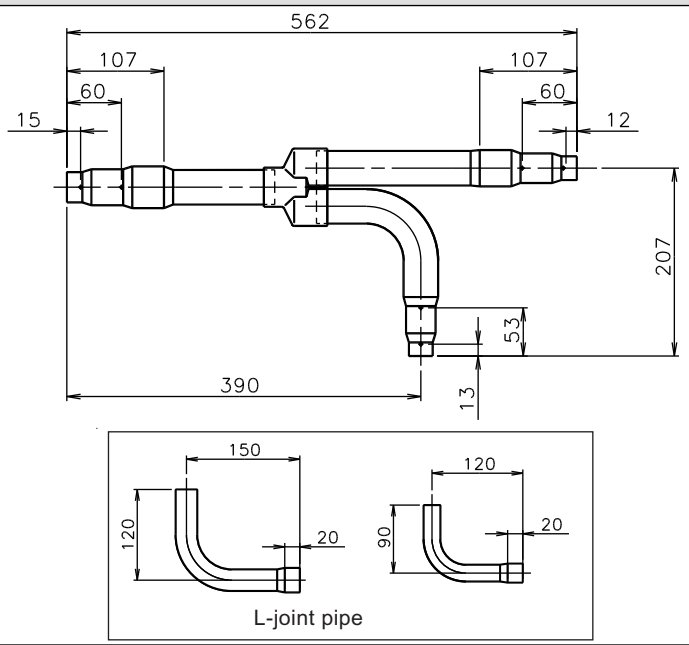

OPTIONAL PARTS

OPTIONAL PARTS

7-3. HEADER

■ CONNECTING CAPACITY

Total model code of indoor unit	Header	
	3 - 6 Branches	3 - 8 Branches
90 or less	UTR-H0906L	UTR-H0908L
91 to 180	UTR-H1806L	UTR-H1808L

90, 91 and 180 are the total value for the indoor unit model code connected downstream.

OPTIONAL PARTS

■MODEL : UTR-H0906L

● Port diameters

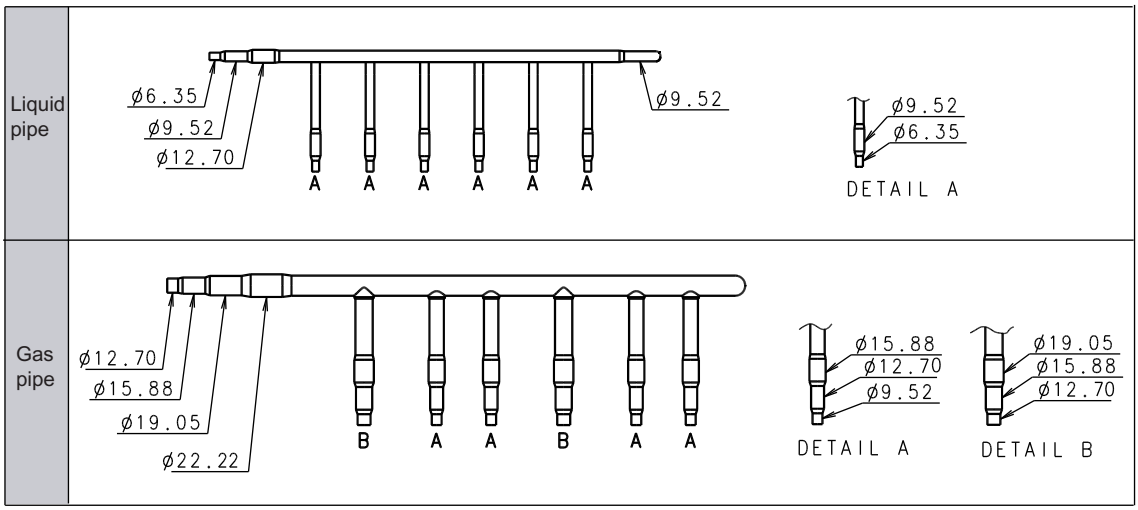

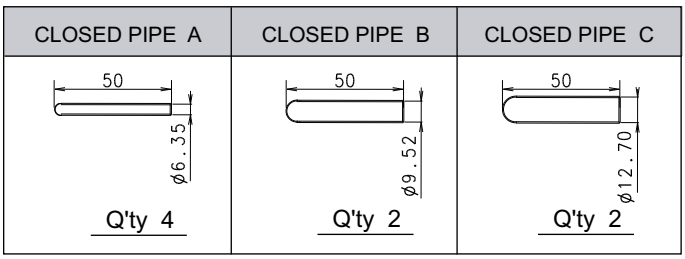

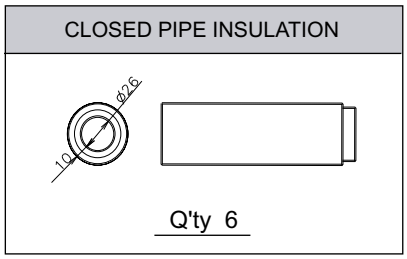

● Heat insulation

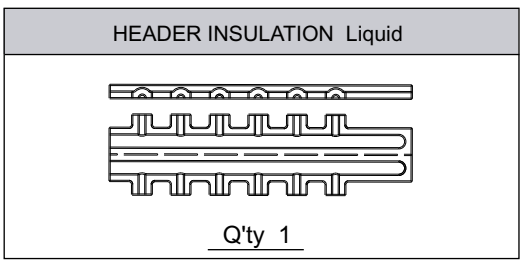

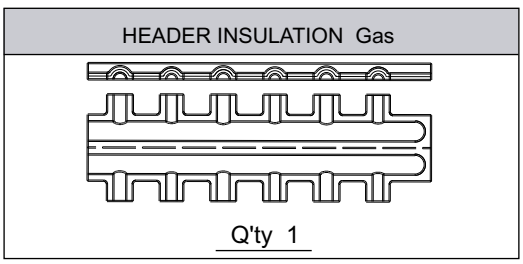

● Dimensions

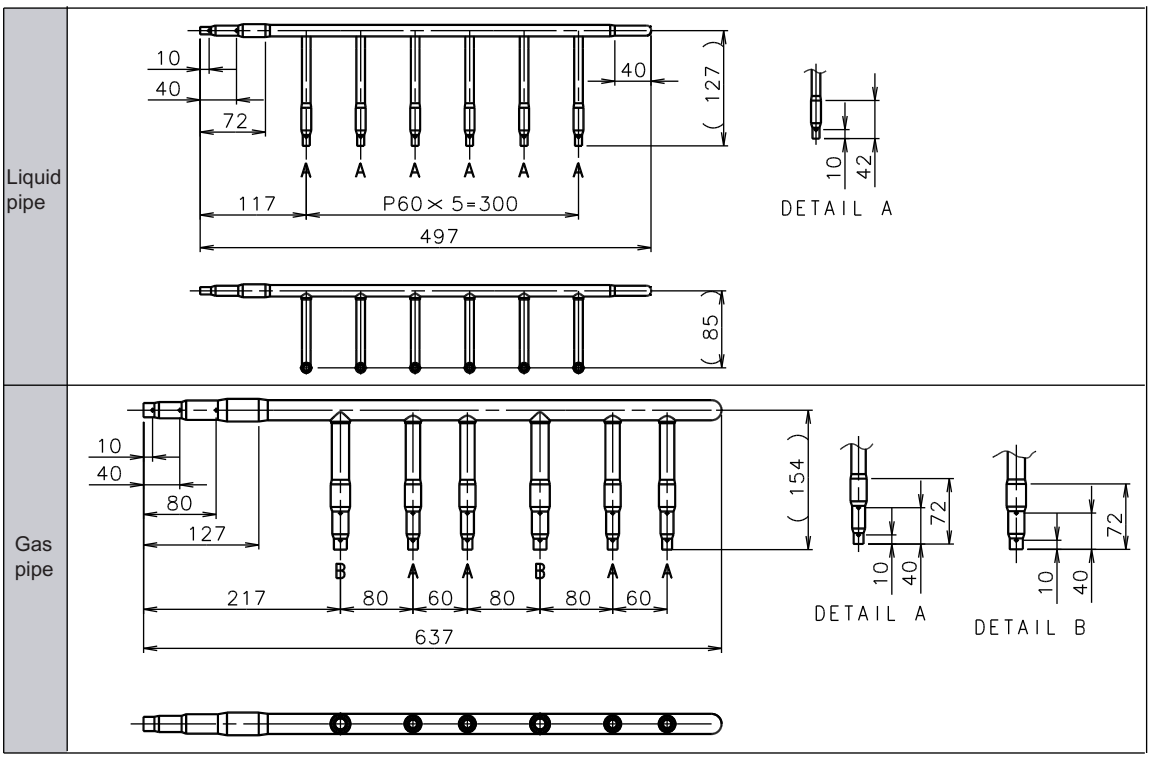

OPTIONAL PARTS

■MODEL : UTR-H0908L

● Port diameters

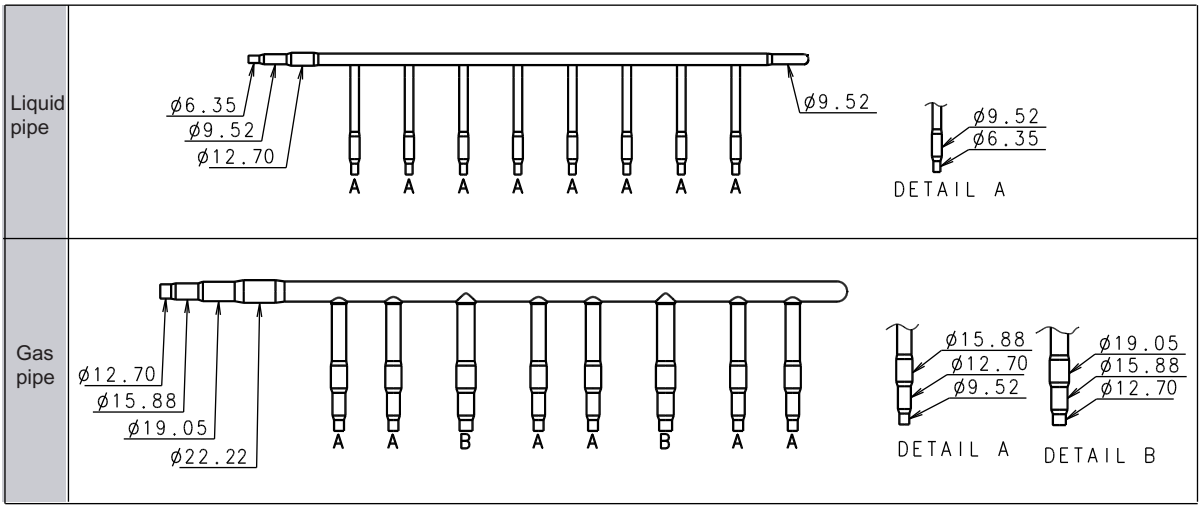

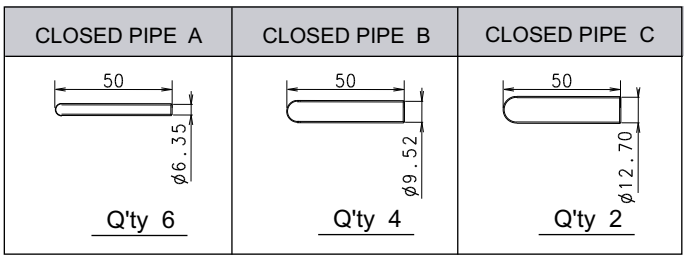

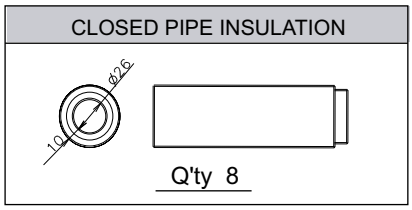

● Heat insulation

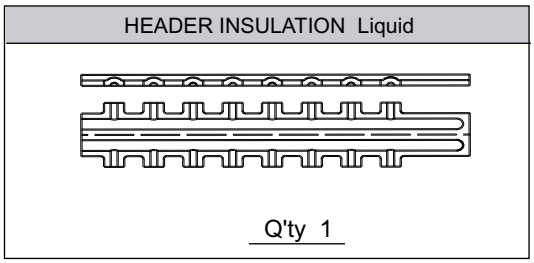

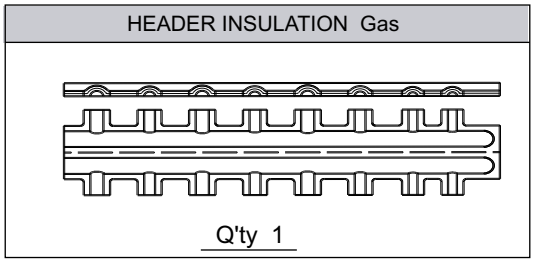

● Dimensions

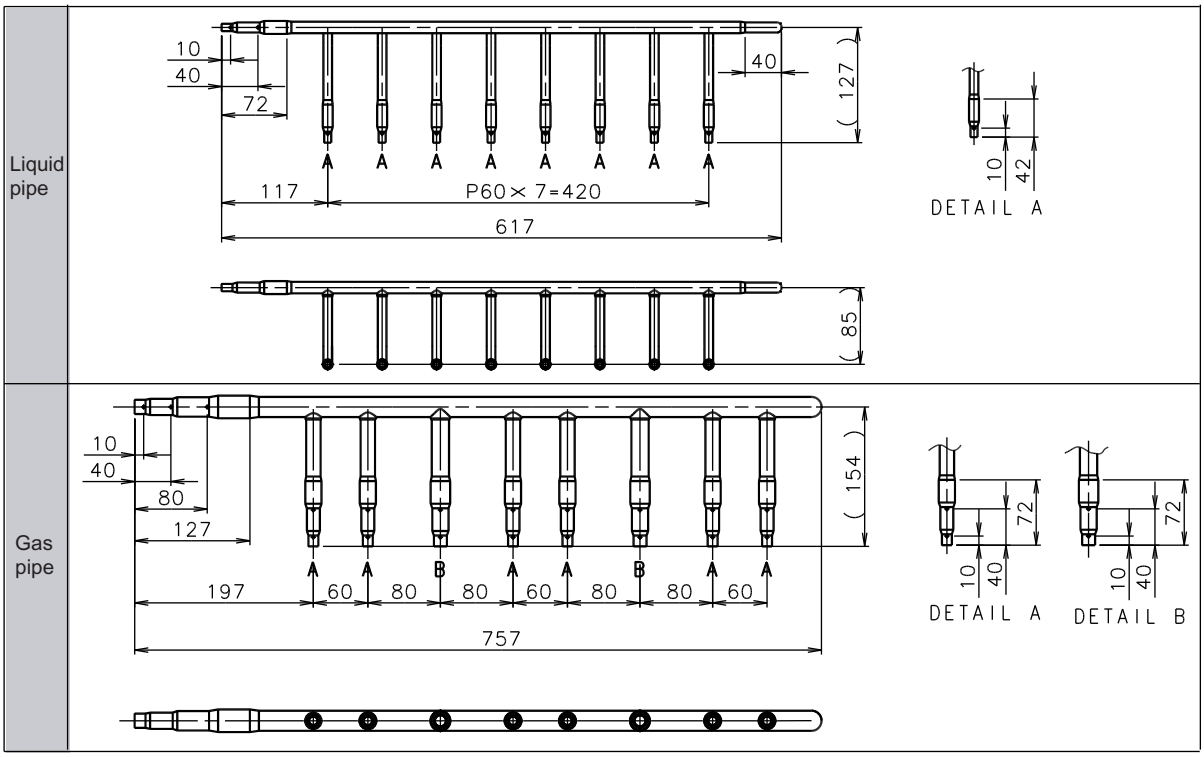

OPTIONAL PARTS

■MODEL : UTR-H1806L

● Port diameters

Liquid pipe

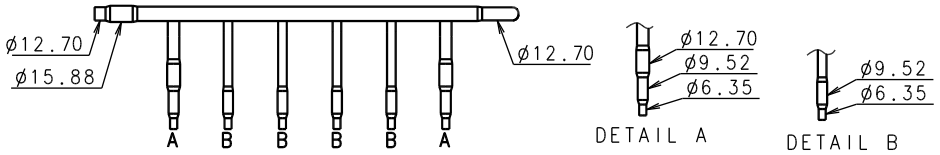

Gas pipe

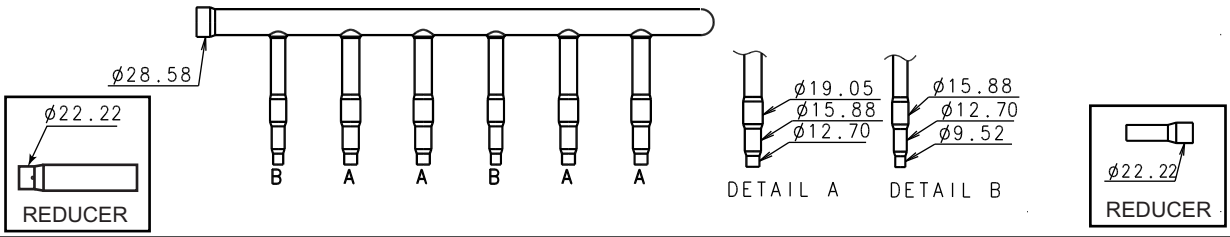

CLOSED PIPE A	CLOSED PIPE B	CLOSED PIPE C
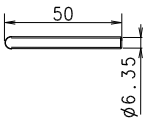	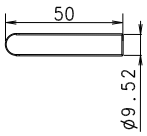	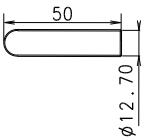
Q'ty 4	Q'ty 2	Q'ty 2

CLOSED PIPE INSULATION
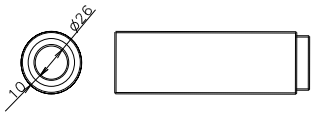
Q'ty 6

● Heat insulaiton

HEADER INSULATION Liquid
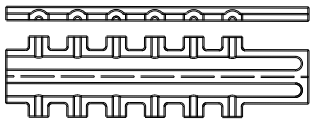
Q'ty 1

HEADER INSULATION Gas
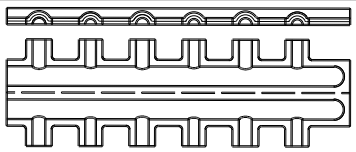
Q'ty 1

● Dimensions

Liquid pipe

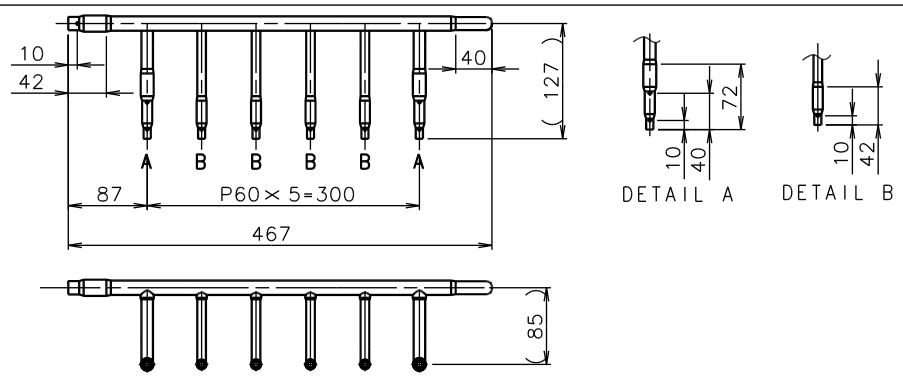

Gas pipe

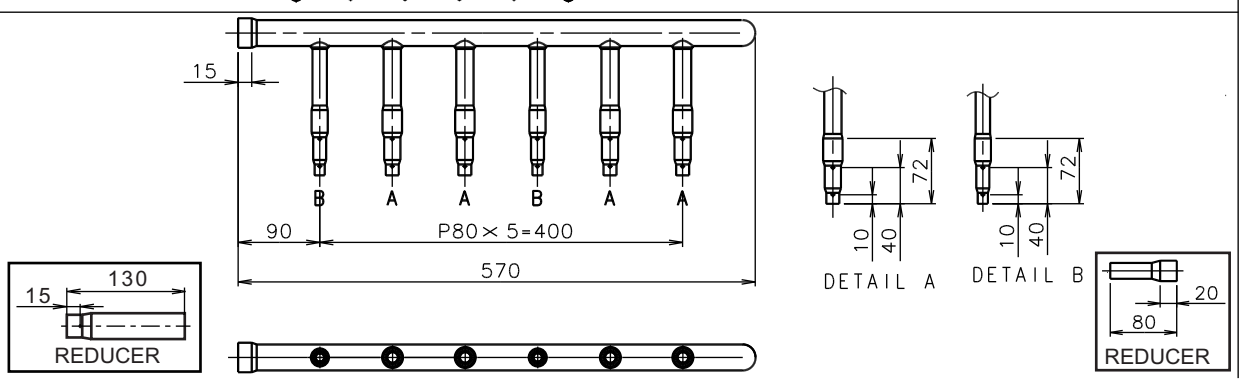

OPTIONAL PARTS

OPTIONAL PARTS

■MODEL : UTR-H1808L

● Port diameters

Liquid pipe

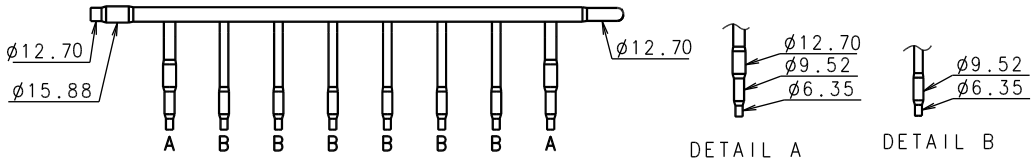

Gas pipe

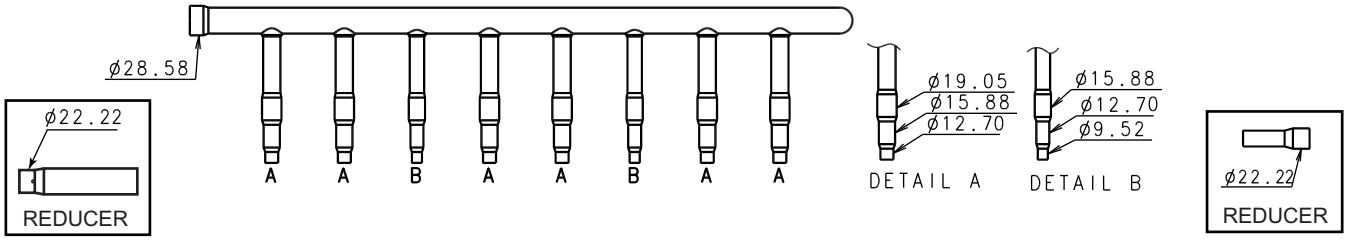

CLOSED PIPE A	CLOSED PIPE B	CLOSED PIPE C
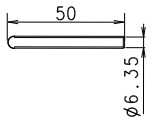	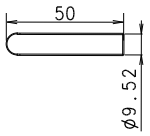	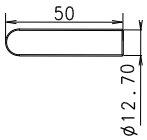
Q'ty 6	Q'ty 2	Q'ty 4

CLOSED PIPE INSULATION

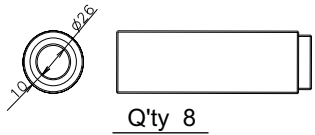

Q'ty 8

● Heat insulation

HEADER INSULATION Liquid

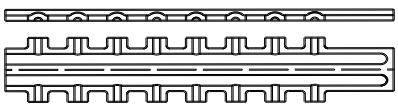

Q'ty 1

HEADER INSULATION Gas

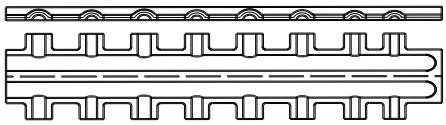

Q'ty 1

● Dimensions

Liquid pipe

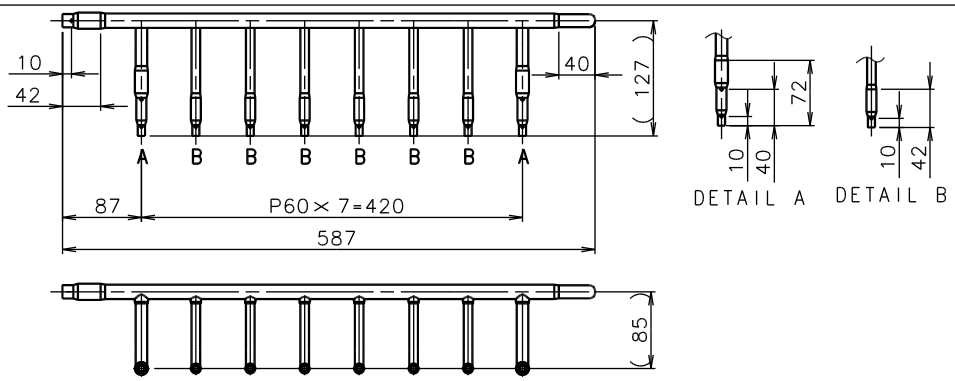

Gas pipe

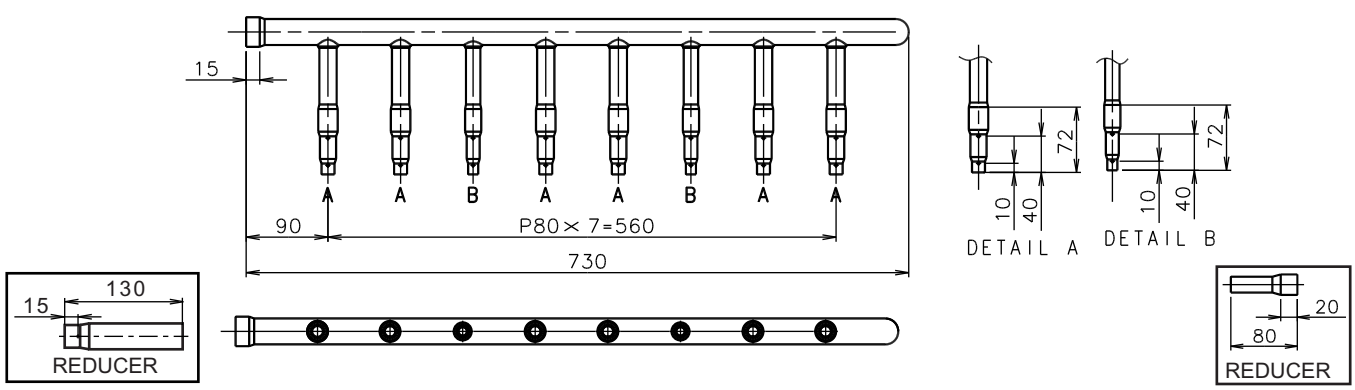

OPTIONAL PARTS

OPTIONAL PARTS

7-4. EV KIT

■MODELS : UTR - EV09XA, UTR - EV14XA

MODEL	Applicable model
UTR-EV09XA	AS*E07LACF AS*E09LACF
UTR-EV14XA	AS*E12LACF AS*E14LACF

EV kit

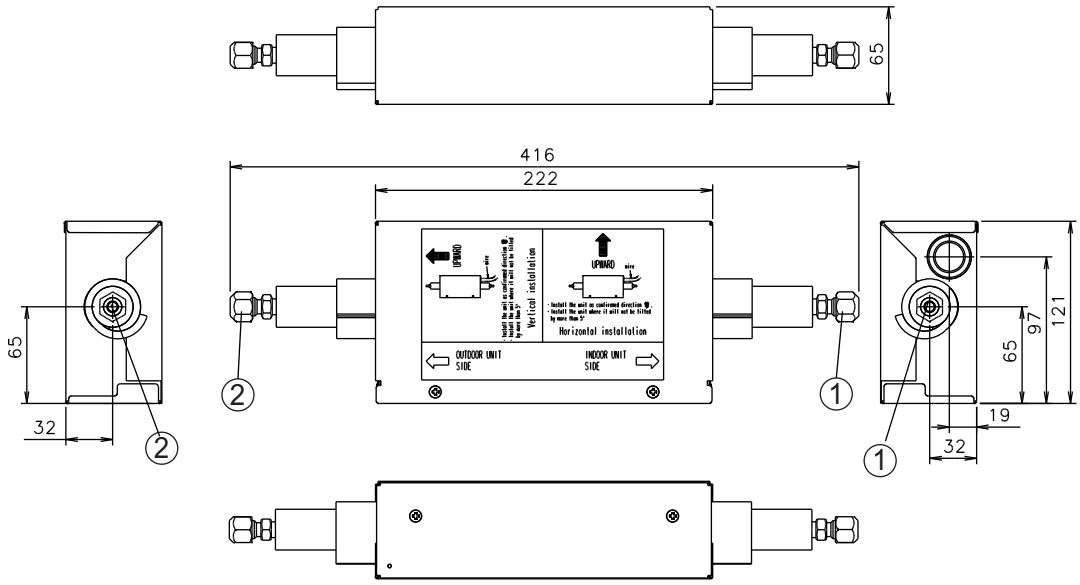

Hanger

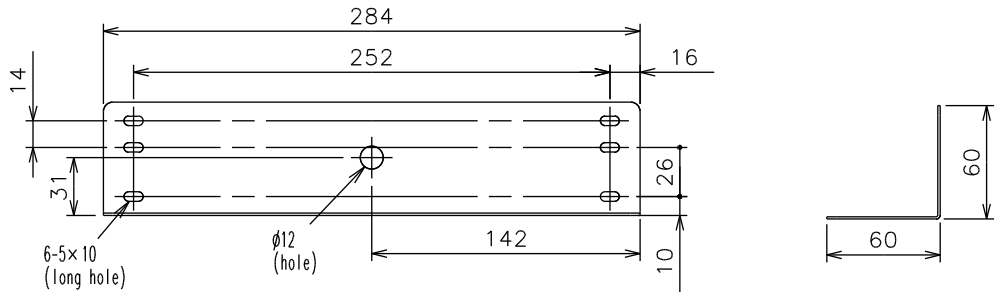

①	Refrigerant pipe flare connection (liquid pipe)	Indoor unit side	ø6.35 mm
②		Outdoor unit side	ø6.35 mm

Name and Shape		Q'ty	Name and Shape	Q'ty	Name and Shape	Q'ty	Name and Shape	Q'ty
EV KIT 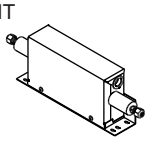		1	Coupler heat insulation	2	Special nut A (M10) (large flange)	1	Special nut B (M10) (small flange)	1
Binder	Large	5	Screw 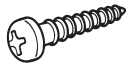	4	Tube	1		
	Small	2						

7-5. CONTROLLER

■PC CONTROLLER [SOFTWARE]

- **UTR-YOTB**

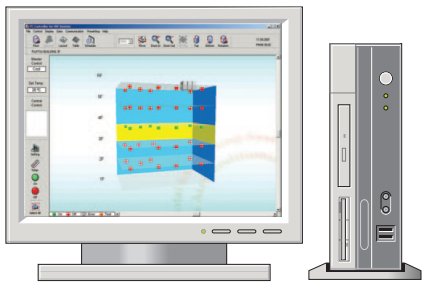

✳Maximum 400 groups / 400 indoor units can be controlled.
✳Monitoring status of operation

■CENTRAL REMOTE CONTROLLER

- **UTB-YCA**
- **UTB-GCA**

✳Maximum 64 groups / 400 indoor units can be controlled.
✳With weekly timer

■GROUP REMOTE CONTROLLER

- **UTB-YDB**
- **UTB-GDB**

✳Maximum 8 remote controller groups (96 indoor units)
✳With weekly timer

■WIRED REMOTE CONTROLLER

- **UTB-YUB**
- **UTB-GUB**
- **UTB-TUB**

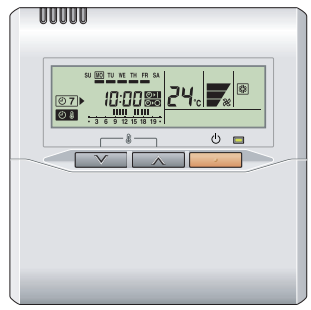

✳On/Off weekly timer
✳Built in thermo sensor

■SIMPLE REMOTE CONTROLLER

- **UTB-YPB**
- **UTB-GPB**
- **UTB-TPB**

With MASTER control

- **UTB-YRA**
- **UTB-GRA**
- **UTB-TRA**

Without MASTER control

✳Background light
✳Easy operation

■WIRELESS REMOTE CONTROLLER

- **UTB-YVB**
- **UTB-GVB**

✳On/Off sleep, program timer
✳Easy operation

OPTIONAL PARTS

OPTIONAL PARTS

7-6. ADAPTOR / CONVERTOR

■ NETWORK CONVERTOR

- UTR-YRDA

- (SPLIT SYSTEM CONVERTOR)
- (GROUP REMOTE CONVERTOR)

■ NETWORK CONVERTOR for LONWORKS®

- UTR-YLLA

(LON / LON CONVERTOR)

■ BACnet® Gateway [SOFTWARE]

- UTR-YLBA

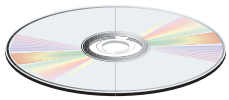

・CD-ROM
・Software Protection key

(VRF / BMS CONVERTOR)

■ SIGNAL AMPLIFIER

- UTR-YRPC

■ TRANSMISSION ADAPTOR

- UTR-YTMA

■ EXTERNAL SWITCH CONTROLLER

- UTR-YESA

OPTIONAL PARTS

7-7. OTHERS

■ FLANGE (square)

Model : UTD–SF045T

- For Low Static Pressure Duct / Duct type

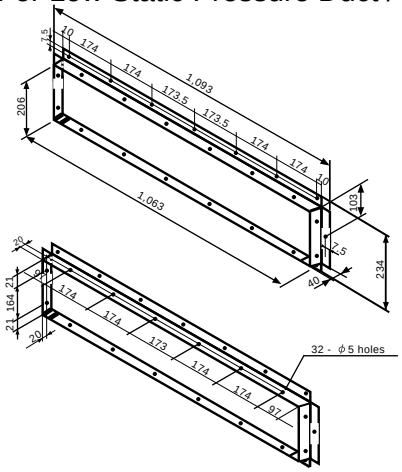

■ FLANGE (round)

Model : UTD–RF204

- For Low Static Pressure Duct / Duct type

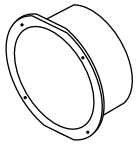

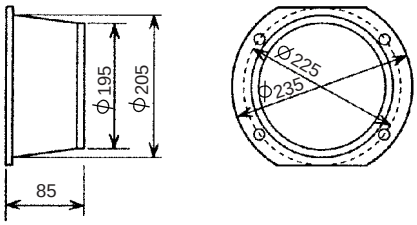

■ LONG-LIFE FILTER

Model : UTD-LF25NA

- For Low Static Pressure Duct / Duct type
  (507 x 239 x 25) x 2pcs

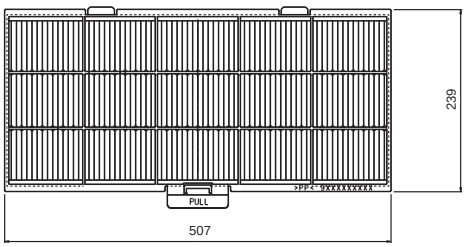

Model : UTD-LF60KA

- For High Static Pressure Duct type
  (430 x 332 x 25) x 2pcs

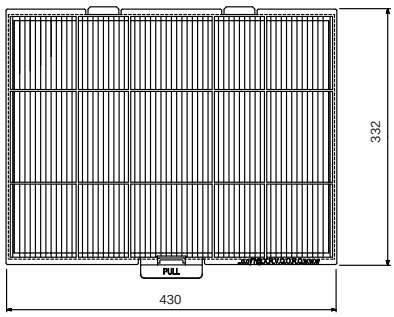

■ DRAIN PUMP UNIT

Model : UTR-DPB24T	Model : UTZ-PX1BBA *1 UTZ-PX1NBA *2
▪ For Ceiling type	*1 For Compact Duct type *2 For Low Static Pressure Duct type / Duct type

■ REMOTE SENSOR UNIT

Model : UTD-RS100

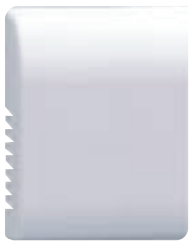

■ GRILLE KIT

Model : UTG-UDYD-W
UTG-UDGD-W

- For Compact Cassette type

■ IR RECEIVER UNIT

Model : UTB-YWA
UTB-TWA

OPTIONAL PARTS

OPTIONAL PARTS

FUJITSU GENERAL LIMITED

1116, Suenaga, Takatsu-ku, Kawasaki 213-8502, Japan

"AIRSTAGE™" is a worldwide trademark of FUJITSU GENERAL LIMITED.

* Microsoft® and Windows® are registered trademarks of Microsoft Corporation in United States.
* Adobe® and Acrobat Reader® are registered trademarks of Adobe Systems Incorporated in the United States.
* Intel®,Pentium® and Celeron® are registered trademarks of Intel Corporation or its subsidiaries in the United States.
* AMD Athlon™ and AMD Duron™ are registered trademarks of Advanced Micro Devices, Inc.
* Echelon®, LONWORKS®, and the Echelon logo are trademarks of Echelon Corporation registered in the United States and other countries.
* BACnet® is a registered trademark of the American Society of Heating Refrigeration and Air Conditioning Engineers (ASHRAE).

Copyright© 2006 Fujitsu General Limited. All rights reserved.

Product specifications are subject to change without notice.

Printed in Japan 2008.09.01
VD010E/12