Refrigerant
R410A

AIRSTAGE™

J SERIES

Variable Refrigerant Flow System

Multi Air Conditioning System for Buildings

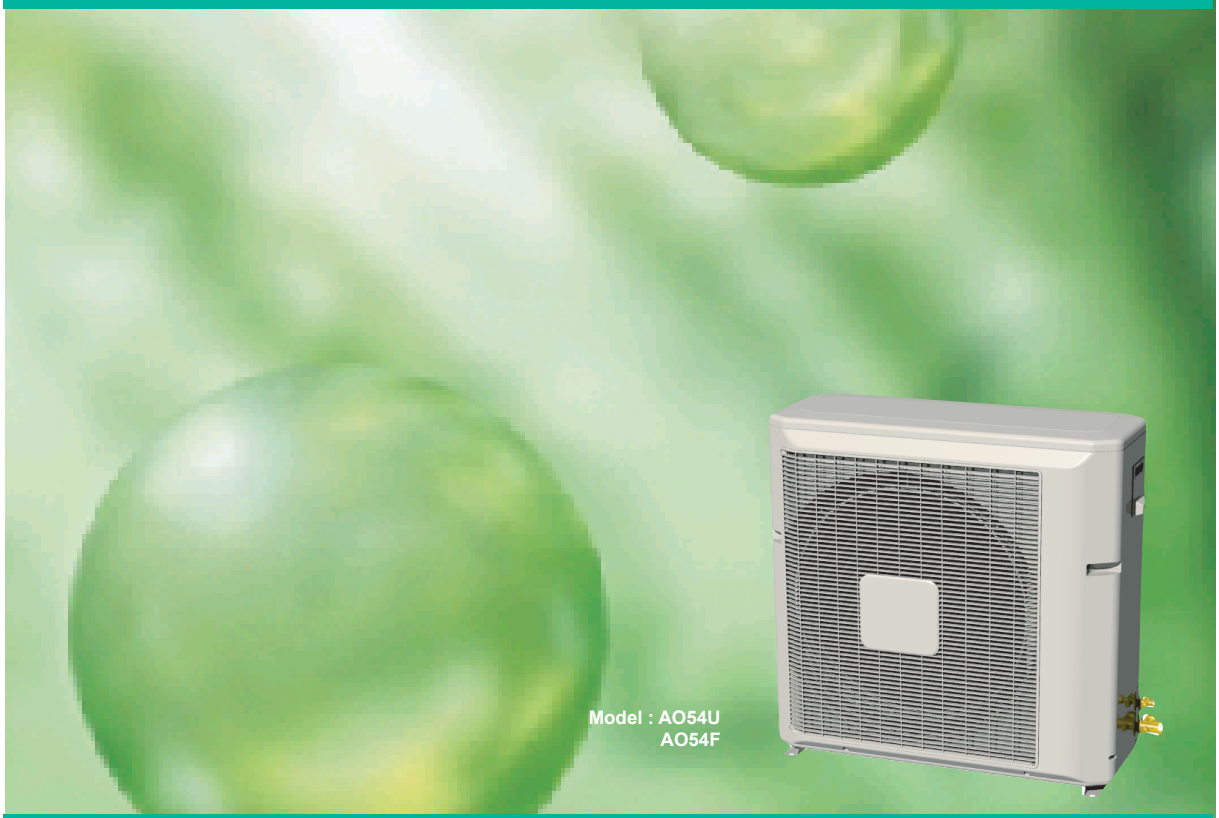

HEAT PUMP & COOLING ONLY TYPE

SERVICE MANUAL

FUJITSU GENERAL LIMITED

CONTENTS

1. TEST RUN

1-1 PRE SETTING 01-01
1-1-1 CUSTOM CODE SETTING 01-01
1-1-2 ADDRESS SETTING 01-02

1-2 CHECK ITEM 01-04
1-2-1 CHECK ITEM BEFORE TEST RUN 01-04
1-2-2 CHECK ITEM DURRING TEST RUN 01-05

1-3 TEST RUN METHOD 01-07
1-3-1 TEST RUN FROM OUTDOOR PC BOARD 01-07
1-3-2 TEST RUN FROM REMOTE CONTROLLER 01-07

1-4 TEST RUN CONTROL 01-08

2. FUNCTION OF PRINTED CIRCUIT BOARD

2-1 PCB LAYOUTS 02-01
2-1-1 INDOOR UNIT CONTROL CIRCUIT BOARD 02-01
2-1-2 OUTDOOR UNIT CONTROL CIRCUIT BOARD 02-03
2-1-3 WIRED, SIMPLE REMOTE CONTROLLER 02-05
2-1-4 GROUP REMOTE CONTROLLER 02-06
2-1-5 EXTERNAL SWITCH CONTROLLER 02-07

2-2 MICROPROCESSOR FUNCTION LIST 02-08
2-2-1 INDOOR UNIT 02-08
2-2-2 OUTDOOR UNIT 02-11

2-3 FUNCTION AND SETTING OF EACH SWITCH 02-12
2-3-1 INDOOR UNIT 02-12
2-3-2 OUTDOOR UNIT 02-18
2-3-3 DIP-SW FUNCTION (WIRED, SIMPLE REMOTE CONTROLLER) 02-22
2-3-4 DIP-SW FUNCTION (GROUP REMOTE CONTROLLER) 02-23
2-3-5 DIP-SW FUNCTION (EXTERNAL SWITCH CONTROLLER) 02-24

2-4 EXTERNAL INPUT & OUTPUT 02-27
2-4-1 INDOOR UNIT 02-27
2-4-2 INDOOR UNIT (COMPACT WALL MOUNTED) 02-29
2-4-3 OUTDOOR UNIT 02-30
2-4-4 GROUP REMOTE CONTROLLER CONVERTER 02-31

CONTENTS

3. INVERTER CONTROL

3-1 INVERTER CONTROL 03-01
3-1-1 WHAT IS INVERTER? 03-01
3-1-2 INVERTER BLOCK OF OUTDOOR UNIT 03-01
3-1-3 BASIC CIRCUIT OF 3 PHASE INVERTER 03-02
3-1-4 PWM CONTROL 03-02

3-2 CIRCUIT DISCRIPTION 03-03
3-2-1 POWER SUPPLY CIRCUIT 03-03
3-2-2 CURRENT DETECTION CIRCUIT 03-03
3-2-3 DIODE BRIDGE 03-03
3-2-4 THERMISTOR 03-03
3-2-5 CHOKE COIL 03-04
3-2-6 ACTIVE FILTER MODULE 03-04
3-2-7 SMOOTHING CONDENSOR 03-04
3-2-8 IPM (INTEGRATED POWER MODULE) 03-04
3-2-9 DC MOTOR (DC INVERTER) 03-05

4. OUTDOOR UNIT OPERATION CONTROL

4-1 OPERATION 04-01
4-1-1 INPUT / OUTPUT LIST 04-01
4-1-2 OPERATION / STOP CONDITION 04-02

4-2 COMPRESSOR OPERATION 04-03
4-2-1 CAPACITY CONTROL 04-03
4-2-2 FREQUENCY CONTROL 04-03

4-3 FAN CONTROL 04-04
4-3-1 COOLING OPERATION 04-04
4-3-2 HEATING OPERATION 04-04

4-4 EXPANSION VALVE CONTROL 04-05

4-5 4-WAY VALVE CONTROL 04-05

4-6 SPECIAL OPERATION 04-06
4-6-1 PRESSURE BALABCE CONTROL 04-06
4-6-2 OIL RECOVERY OPERATION 04-06
4-6-3 DEFROSTING OPERATION 04-06
4-6-4 CRANK CASE HEATER OPERATION 04-07

4-7 PROTECTIVE FUNCTION 04-08
4-7-1 PROTECTIVE FUNCTION LIST 04-08

CONTENTS

5. INDOOR UNIT OPERATION CONTROL

5-1 FAN CONTROL 05-01
5-1-1 FAN SPEED SETTING 05-01
5-1-2 "AUTO" POSITION 05-01

5-2 MASTER CONTROL 05-02
5-2-1 OPERATION MODE CONTROL 05-02
5-2-2 AUTO CHANGEOVER 05-02
5-2-3 "COOL" POSITION 05-03
5-2-4 "HEAT" POSITION 05-03
5-2-5 "FAN" POSITION 05-03

5-3 LOUVER CONTROL 05-04
5-3-1 ADJUSTING THE DIRECTION OF AIR CIRCULATION 05-04
5-3-2 SWING OPERATION 05-05

5-4 ELECTRONIC EXPANSION VALVE CONTROL 05-07

5-5 DRAIN PUMP OPERATION 05-07

5-6 FUNCTION 05-08
5-6-1 AUTO RESTART 05-08
5-6-2 ICING PROTECTION CONTROL 05-08
5-6-3 COLD AIR BLOWING PROTECTION CONTROL 05-08
5-6-4 DEFROSTING OPERATION, OIL RECOVERY OPERATION 05-08

5-7 TIMER CONTROL 05-09
5-7-1 WIRELESS REMOTE CONTROLLER 05-09
5-7-2 WIRED REMOTE CONTROLLER 05-11
5-7-3 GROUP REMOTE CONTROLLER 05-14

6. TROUBLE SHOOTING

6-1 INDOOR UNIT 06-01
6-1-1 NORMAL OPERATION DISPLAY 06-01
6-1-2 ABNORMAL OPERATION DISPLAY 06-02

6-2 OUTDOOR UNIT 06-03
6-2-1 NORMAL OPERATION DISPLAY 06-03
6-2-2 ABNORMAL OPERATION DISPLAY 06-04

6-3 REMOTE CONTROLLER 06-05
6-3-1 WIRED REMOTE CONTROLLER 06-05
6-3-2 SIMPLE REMOTE CONTROLLER 06-06
6-3-3 GROUP REMOTE CONTROLLER 06-07

6-4 NETWORK CONVERTER 06-09

6-5 TROUBLE SHOOTING 06-10
6-5-1 TROUBLE SHOOTING WITH ERROR CODE (INDOOR UNIT) 06-10
6-5-2 TROUBLE SHOOTING WITH ERROR CODE (OUTDOOR UNIT) 06-20
6-5-3 TROUBLE SHOOTING FOR OPTIONAL PARTS 06-41
6-5-4 TROUBLE SHOOTING WITH NO ERROR CODE 06-48

6-6 CASES SUCH AS THESE ARE NORMAL 06-54

6-7 SERVICE PARTS INFORMATION 06-55

CONTENTS

7. INSTALLATION

7-1 ADDITIONAL CHARGE 07-01

7-2 EXAMPLES OF SYSTEM SETTING 07-02

7-3 PRECAUTIONS FOR INSTALLATION 07-08

7-4 PUMP DOWN METHOD 07-10

7-4-1 PROCEDURE OF THE PUMP DOWN 07-10

7-4-2 A FLOW CHART OF PUMP DOWN 07-10

8. REFRIGERANT CAUTION -R410A-

8-1 R410A TOOLS 08-01

8-2 PRECAUTION FOR INSTALLATION 08-02

8-3 PRECAUTIONS FOR SERVICING 08-04

8-4 NEW REFRIGERANT R410A 08-05

8-4-1 WHAT IS HFC? 08-05

8-4-2 DESIGNED PRESSURE OF R410A REFRIGERANT 08-07

8-5 DEFERENCE FROM CONVENTIONAL MODEL (R22) AND PRECAUTION 08-08

9. APPENDING DATA

9-1 REFRIGERANT PIPE SYSTEM DIAGRAM 09-01

9-2 CHARACTERISTICS OF SENSORS 09-03

9-2-1 THERMISTOR 09-03

9-2-2 PRESSURE SENSOR 09-05

9-3 WIRING DIAGRAM 09-06

9-3-1 INDOOR UNIT 09-06

9-3-2 OUTDOOR UNIT 09-14

9-4 MODEL DESIGNATION 09-16

9-4-1 OUTDOOR UNIT 09-16

9-4-2 INDOOR UNIT 09-17

10. DISASSEMBLY ILLUSTRATION & PARTS LIST

10-1 OUTDOOR UNIT 10-01

10-2 INDOOR UNIT 10-07

Refrigerant
R410A

AIRSTAGE™

J SERIES

1 . TEST RUN

1. TEST RUN

1-1 PRE SETTING

1-1-1 CUSTOM CODE SETTING

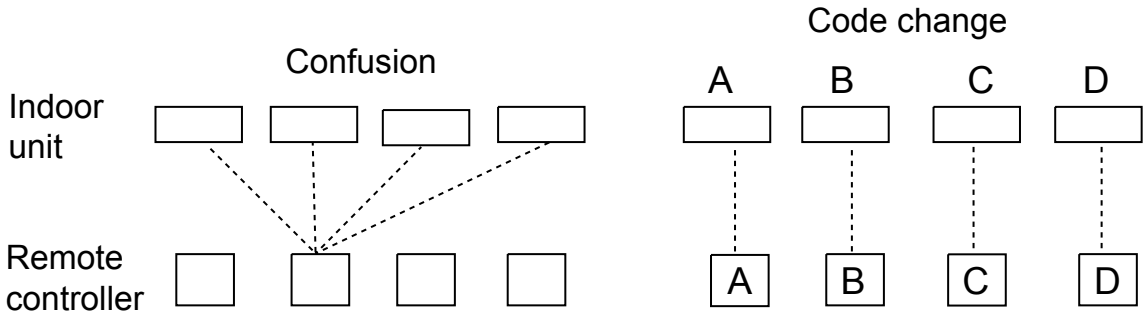

When changing the custom code, follow the instruction below
Selecting the custom code prevents the indoor unit mix-up.
(Up to 4 codes can be set)

CUSTOM CODE SETTING FOR INDOOR UNIT

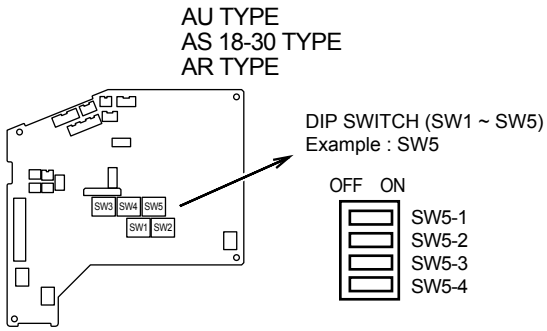

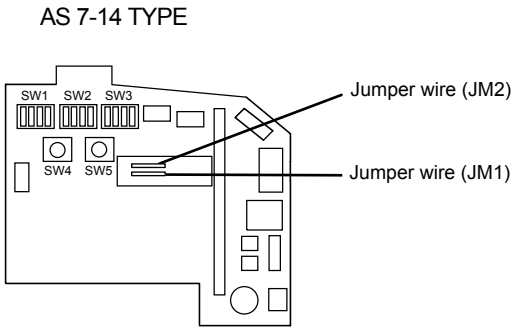

Table

	Custom code			
	A (Primary setting)	B	C	D
DIP SW 5 - 1	OFF	ON	OFF	ON
DIP SW 5 - 2	OFF	OFF	ON	ON

Table

Jumper wire		Remote controller custom code
JM 1	JM 2	
Connect	Connect	A (Primary setting)
Disconnect	Connect	B
Connect	Disconnect	C
Disconnect	Disconnect	D

CUSTOM CODE SETTING FOR WIRELESS REMOTE CONTROLLER

1	2	3	4
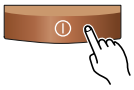		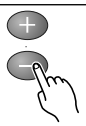	
Press until only the clock is displayed.	Press for more than 5 seconds to display the current custom code. (Initially set to A)	Change the custom code between A-b-c-d to match the code on the display to the air conditioner custom code.	Press again to return to the clock display. (The custom code will be changed.)

NOTES

(1) If no buttons are pressed within 30 seconds after the custom code is displayed, the system returns to the original clock display.In this case, start again from step 1.

(2) The remote controller resets to custom code A when the batteries in the remote controller are replaced. If you use a custom code other than custom code A, reset the custom code after replacing the batteries.

If you do not know the air conditioner custom code setting, try each of the custom codes (A-b-c-d) until you find the code which operates the air conditioner.

1-1-2 ADDRESS SETTING

1. Switching selection of address setting mode.

(1) Press and hold 3 sec the "MANUAL AUTO" button of Receiver unit.

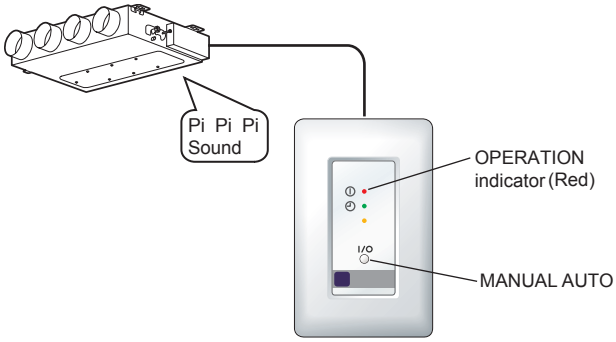

(2) Press the ACL button, while pressing the FAN CONTROL and SET TEMP (+) button.

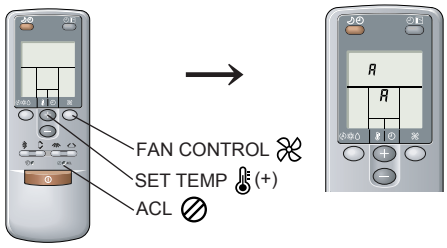

2. Selection and confirmation of custom code.

(1) Press the SET TEMP (+) or (-) button to select the custom code to adjust the indoor unit setting.

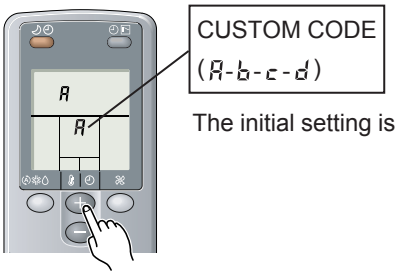

(2) Press the VERTICAL AIR FLOW to send the code to the indoor unit.

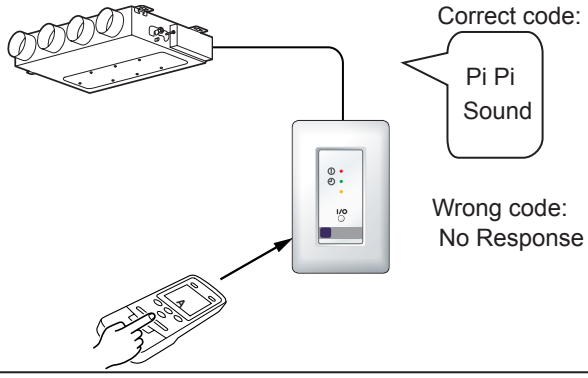

3. Address setting

(1) Press the MASTER CONTROL to change in to address setting mode.

(2) Make sure bottom number is "01"
If other than "01" press the SET TEMP (+) or (-) to select "01".

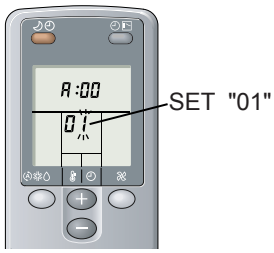

(3) Press the FAN CONTROL button.
Address data display flashing.

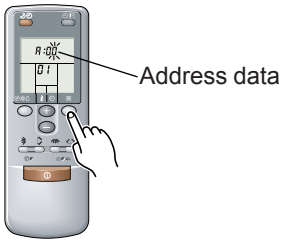

(4) Press the SET TEMP (+) or (-) button to select the address.

∗1. Address should be within "00" to "07".
∗2. Each unit should have different address.

Range
00 - 07

(5) Press the START/STOP button and make sure the beeping sound is heard.

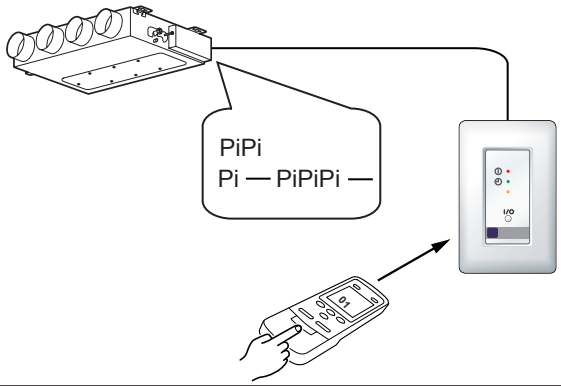

(6) Indoor unit is displayed address number.

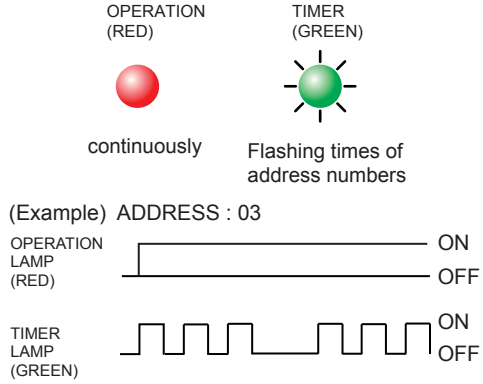

4. Check Address setting

(1) Press the SLEEP button.

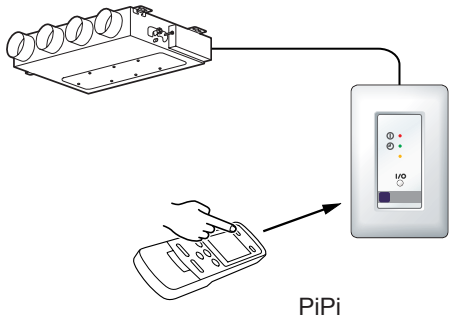

PiPi
CORRECT : Pi — PiPiPiPiPi —

PiPi
WRONG: Pi ———— (3 sec)

5. Completion of Address setting mode

(1) Press the MANUAL AUTO button 3 sec.

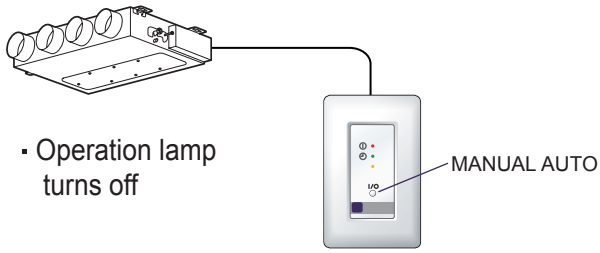

- Operation lamp turns off

Timer lamp keep blinks the number of times of address No.

(2) Press the ACL button.

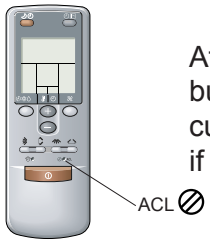

After pressing the ACL button, please set the custom code again if b,c,d setting.

6. Setting up each Indoor unit

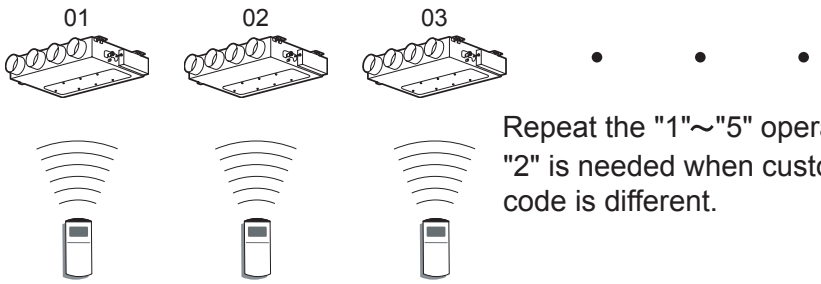

Repeat the "1"～"5" operation.
"2" is needed when custom code is different.

Address can be checked by the number of blinking of Timer Lamp.

7. Reset the power after setting up address of all Indoor units.

* If the reset is not performed, address can not be read in normally.

1-2 CHECK ITEM

1-2-1 CHECK ITEM BEFORE TEST RUN

Before test run, check the following items.

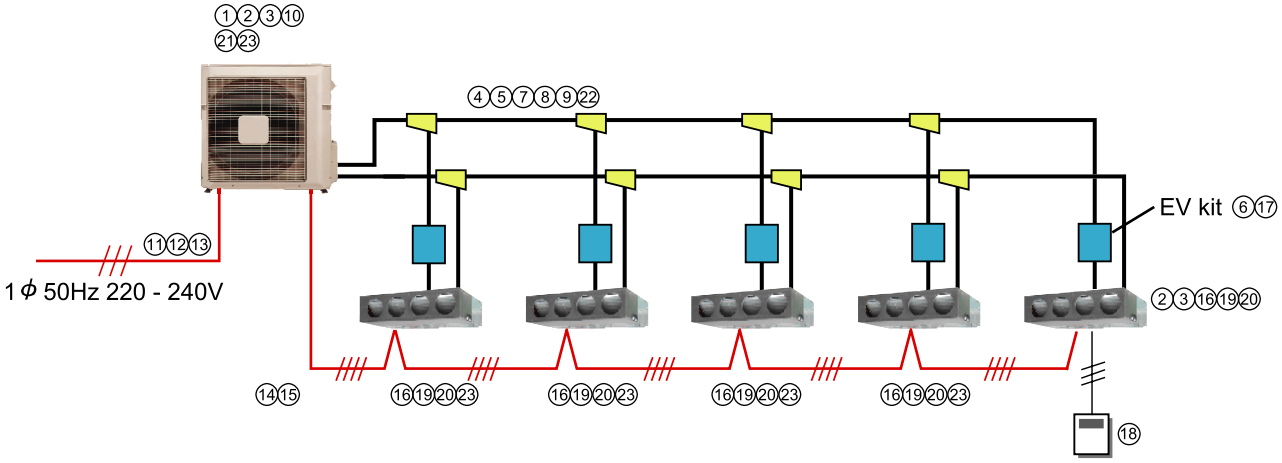

① Is the selection of the outdoor unit and the indoor units correct?
(Check the number of connected indoor units, total capacity of the indoor units)
② Is the unit installed correct?
③ Is the unit installed with enough service space and without air obstacle?
④ Is the piping length correct?
(Ex. Maximum piping length : 70m)
⑤ Is the diameter and thickness of the selected pipe correct?
⑥ Is the EV kit connected to all the unit?
⑦ Doesn't gas leak?
⑧ Have the vacuum process done enough time?
⑨ Is the refrigerant flow correct?
⑩ Is the additional refrigerant charge amount correct?
⑪ Are the power supply cables connected?
⑫ Is the spec. for the power supply cable correct?
⑬ Is the voltage of power suppy within proper range?
⑭ Is the spec. for connection cable correct?
(3 wire , 2.5mm^2)
⑮ Is the connection cable connected to all the units?
⑯ Is the connection cable connected correct?
⑰ Is the EV kit connection cable connected correct?
⑱ Is the remote controller cable connected correct?
⑲ Are the addresses set?
⑳ Have the all settings done on the PCB?
㉑ Is the 3 way valve opened?
㉒ Is the pipe heat-insulated which have the enough thickness?
(Humidity ～70% :10mm, 70～80% :15mm, 80%～ : 20mm)
㉓ Is the drain water-flow correct?

1-2-2 CHECK ITEM DURRING TEST RUN

During the test run operation, check the following items.

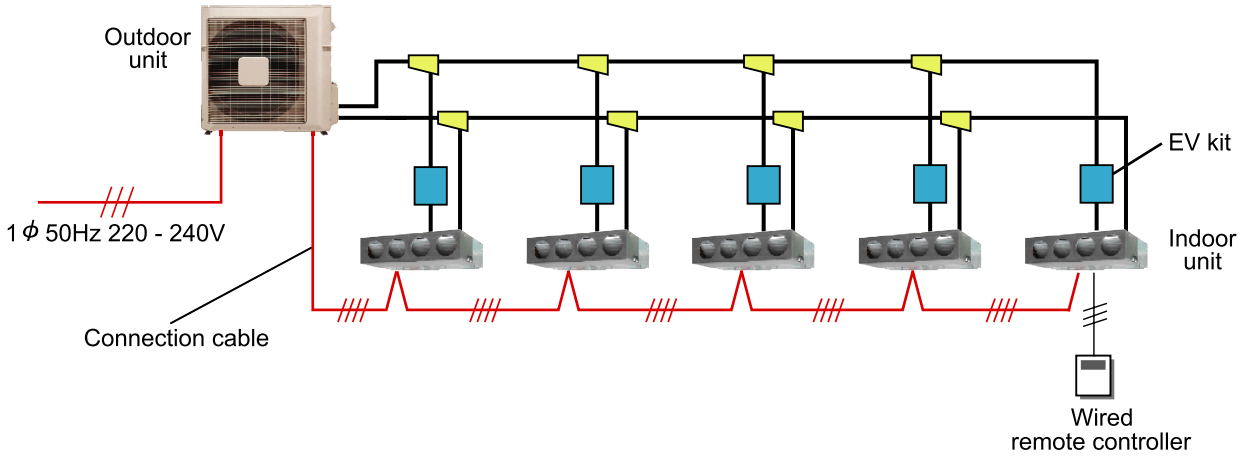

① When the power supply turn on,check the following items.

Outdoor unit : LED 1 lights continuously.
if LED 1 flushing, it means error occurs ,check the eroor and solve the problem.

Indoor unit : LED RED (operation lamp) & GREEN (timer lamp) lights flush alternately.
(Auto-restart disable, DIP SW 2-4 : OFF)
All LED are OFF. (Auto-restart enable, DIP SW 2-4 : ON)

RC : CLOCK display indicates

When errors occur, don't advance towards the following step before a complete settlement of all these errors.

② Start the Indoor unit test run from remote controller one by one (Refer to 1-3-2)

Check the following item.

Indoor unit

LED (red&green) light flush at the same time slowly.
Louver operates to open.
Fan rotates
Air flow comes
(Drain pump opration)
RC signal receive
No abnormal sound and vibration.

Outdoor unit

Coresponds from indoor unit signal
Compressor start to operates
Fan rotates
No abnormal sound and vibration.

Measure the following item.

Indoor unit

Air intake temp.
Air flow temp.

Outdoor unit

Outdoor temp.
Discharge pipe temp.
Suction pipe temp.
High pressure
Low pressure
Frequency of compressor

Continue the operation about 10 minutes.

③ When there is no ploblem, check the next indoor unit.

④ After every indoor unit is check by test run, please do test run using all of the indoor units and check them.

■CHECK LIST

	Check item	Checking Method	Standard
1	After operating the indoor unit, the compressor operates?	Check operation sound and the LED of outdoor unit PCB.	Outdoor unit LED 3 : flushing
2	High pressure and low pressure are normal?	Confirm with a pressure gauge	Cooling : Low pressure 101.5 to 130.5 psi (approx.) (0.7 to 0.9 MPa) Heating : High pressure 319.1 to 391.6 psi (approx.) (2.2 to 2.7 MPa)
3	Intake and outlet air Temperature of indoor unit are normal?	Check that there is a difference between the intake and outlet air temperatures.	Cooling : Below -10°C (approx.) Heating : Above 15°C (approx.)
4	Water is drained from drain hose or by the drain pump smoothly? (Only for cooling mode)	Check operation sound of the drain pump.	—
		Confirm water is draining.	—
5	Expansion valve of the stopped indoor unit is normal?	Check the refrigerant flows to the heat exchanger.(Wait at least 5 minutes after the indoor unit has stopped before checking the refrigerant.)	Cooling : No refrigerant flow Heating : A little refrigerant flow

1-3 TEST RUN METHOD

Always turn on the power 4 hours prior to the start of the operation in order to ensure compressor protection.

1-3-1 TEST RUN FROM OUTDOOR PC BOARD

By setting DIP SW1-1 and SW1-2 on control PC board of outdoor unit, cooling test run for all the indoor units in the same refrigerant system can be performed.

SELECTOR SWITCH FOR TEST RUN AND NORMAL OPERATION (◆. . . Factory setting)

	SW1-1	SW1-2	Operation Mode	Remarks
◆	OFF	OFF	Normal operation	
	ON	OFF	Cooling test run	SW1-1 / SW1-2 : OFF / OFF or ON / ON → ON / OFF
	OFF	ON	Heating test run	SW1-1 / SW1-2 : OFF / OFF or ON / ON → OFF / ON
	ON	ON	Normal operation	

1-3-2 TEST RUN FROM REMOTE CONTROLLER

1) Standard wired remote controller

Stop the indoor and outdoor units. Push the FAN CONTROL button and MASTER CONTROL button simultaneously for more than 3 seconds.
The air conditioner will start to conduct a test run and "o1" will display on the remote controller display.
However, the SET TEMP./DAY setting button does not have function, but all other buttons, displays, and protection functions will operate.

- Perform the test operation for 60 minutes.
- To stop test run, push the START/STOP button of the standard wired remote controller.
- For the operation method, refer to the operating manual and perform operation check.
- Check that there are no abnormal sounds or vibration sounds during test run operation.

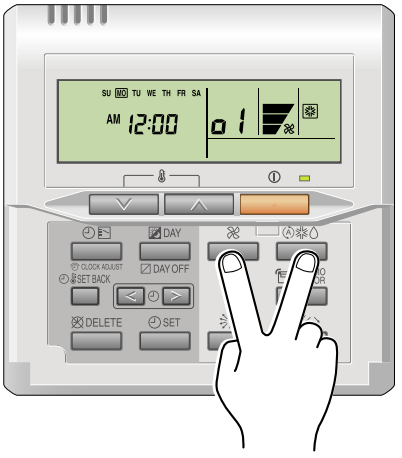

2) Standard wireless remote controller

- Start the indoor unit.
- Short tow pieces of metallic bodies in the test run frame, while the air conditioner is running.
- To stop test run operation, push START/STOP ⓘ button of the wireless remote controller.

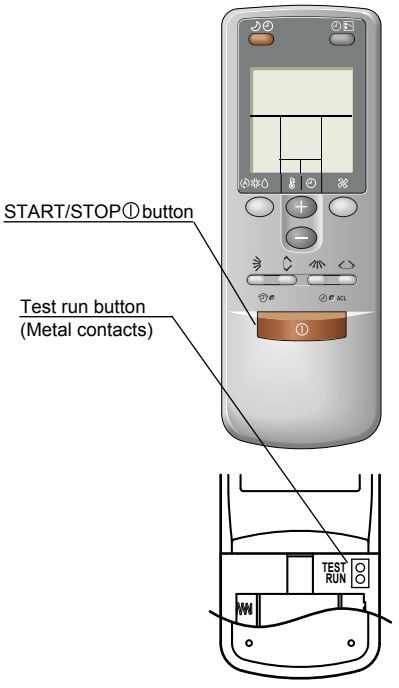

When the air conditioner is being test run, the OPERATION and TIMER lamps of indoor unit flash slowly at the same time.

3) Simple remote controller
Stop the indoor and outdoor units. Push the remote controller ▼ button and button simultaneously for more than three seconds. The air conditioner will start to conduct a test run and "o 1" will display on the temperature display.
However the ▲ ▼ setting button does not have function but all other buttons, displays and protection functions will operate.

- To stop test running press the button of the simple remote controller.
- For the operation method refer to the operating manual and perform operation check.
- Check that there are no abnormal sounds or vibration sounds during test run operation.

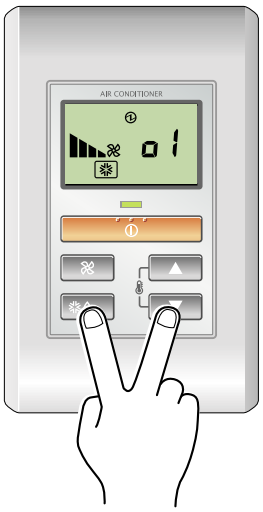

1-4 TEST RUN CONTROL

1) When the test run signal is transmitted from standard wired, wireless remote controller and simple remote controller

(1) The test run operation starts and the electric expansion valve is controlled to a maximum flow, regardless of the temperature condition.
(2) De-frosting and frost prevention operation has priority over item (1).
(3) After 60 minutes passes, the test run stops, however the operation continues in same operation mode.

2) When the test run signal is transmitted from the outdoor unit.
(1) Whether state of the indoor unit operates or stops, All units in the same refrigerant system will start to conduct a test run in accordance with the operation mode set by DIP SW 1-1 or SW 1-2 of outdoor unit (see 1 - 3 - 1).
(2) Test running initialization is shown below.

Operating Mode	Cooling	Heating
Fan speed	Hi	Hi
Room Temperature Indication	18°C	30°C
Vertical Air Direction Panel	Position ①	Position ④ or ⑥
Horizontal Air Direction Panel	Position ③	Position ③
Swing	OFF	OFF

※ Please refer to "5-4 LOUVER CONTROL" in this manual and find the definition for air direction panel position.

Refrigerant
R410A

AIRSTAGE™

J SERIES

2 . FUNCTION OF PRINTED CIRCUIT BOARD

2. FUNCTION OF PRINTED CIRCUIT BOARD

2-1 PCB LAYOUTS

2-1-1 INDOOR UNIT CONTROL CIRCUIT BOARD

Indoor unit			
DIP SW	SW 1	1	Forbidden
		2	Forbidden
		3	Room temp correct coefficient of heating 1
		4	Room temp correct coefficient of heating 2
	SW 2	1	Room temp correct coefficient of cooling
		2	Forbidden
		3	Forbidden
		4	Auto restart validity / invalidity
	SW 3	1	Forbidden(Indoor unit fan speed switch 1)
		2	Forbidden(Indoor unit fan speed switch 2)
		3	Forbidden(Indoor unit fan speed switch 3)
		4	External input select edge / pulse
	SW 4	1	Forbidden(Indoor unit model code)
		2	Forbidden(Indoor unit model code)
		3	Forbidden(Indoor unit model code)
		4	Forbidden(Indoor unit model code)
	SW 5	1	Wireless remote controller custom code switch 1
		2	Wireless remote controller custom code switch 2
		3	Frost prevention setting switch
		4	Draft prevention setting switch
Rotary SW	SW 8		Forbidden
	SW 9		Forbidden

■ SWITCH POSITION

- **Indoor unit control circuit board**

For AU / AR types indoor unit

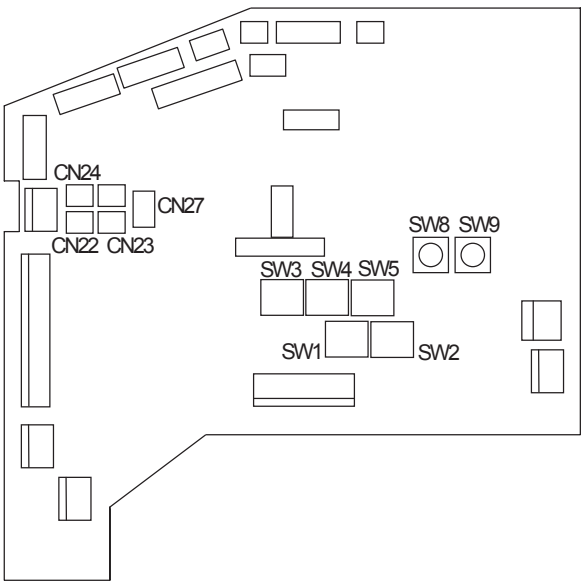

For AS type indoor unit

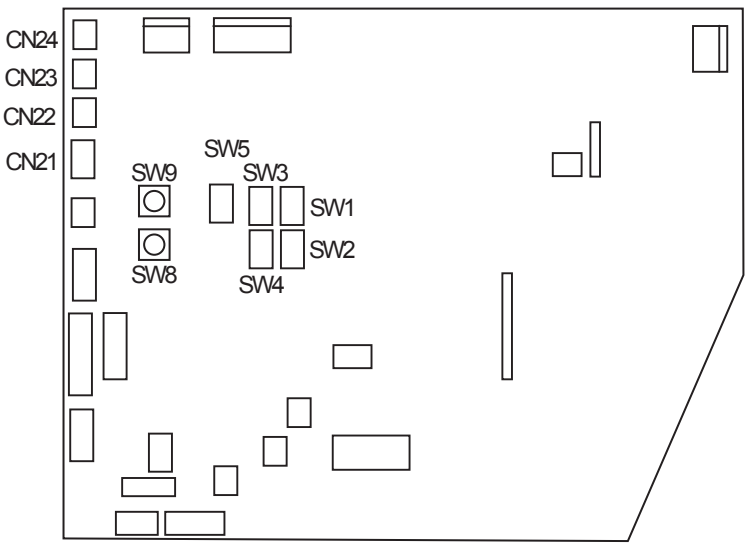

(COMPACT WALL MOUNTED TYPE)

Indoor unit			
DIP SW	SW 1	1	Forbidden(Indoor unit fan speed switch 1)
		2	Forbidden(Indoor unit fan speed switch 2)
		3	Forbidden(Indoor unit model code)
		4	Forbidden(Indoor unit model code)
	SW 2	1	Forbidden
		2	Forbidden
		3	Auto restart validity / invalidity
		4	Forbidden
Jumper wire	JM 1		Wireless remote controller custom code
	JM 2		Wireless remote controller custom code

■ SWITCH POSITION

- **Compact wall mounted type indoor unit control circuit board**

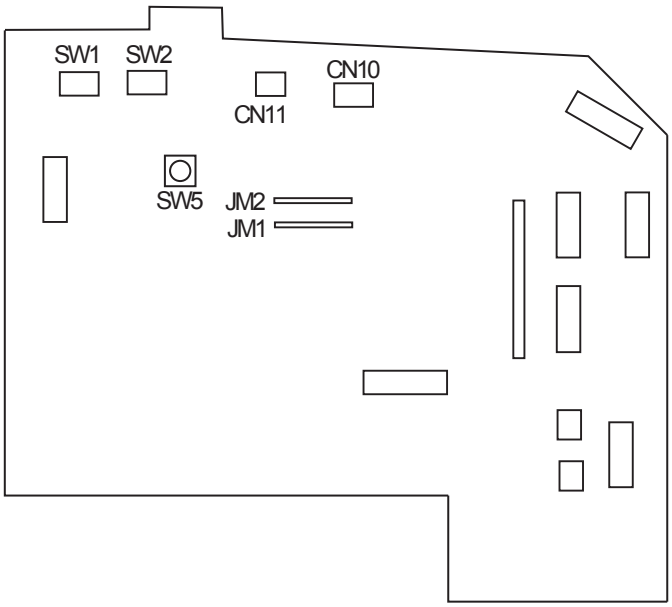

2-1-2 OUTDOOR UNIT CONTROL CIRCUIT BOARD

Outdoor unit			
DIP SW	SW 1	1	Test run (Cooling)
		2	Test run (Heating)
		3	Pump down operation
		4	Forced oil recovery operation
	SW 2	1	Silent operation mode
		2	Forbidden
		3	Electric current selector switch 1
		4	Electric current selector switch 2
	SW 3	1	Forbidden
		2	Forbidden
		3	Forbidden
		4	Forbidden
	SW 4	1	Forbidden
		2	Forbidden
		3	Forbidden
		4	Forbidden
	SW 5	1	Cooling capacity shift switch 1
		2	Cooling capacity shift switch 2
		3	Heating capacity shift switch 1
		4	Heating capacity shift switch 2
	SW 6	1	Pipe length switch 1
		2	Pipe length switch 2
		3	Defrost temp setting switch 1
		4	Defrost temp setting switch 2
	SW 7	1	Forbidden(System type switch 1)
		2	Forbidden
		3	Forbidden(Model code switch)
		4	Forbidden(Refrigerant type switch)
	SW 8	1	Forbidden(System type switch 3)
		2	Forbidden(System type switch 4)
		3	Forbidden
		4	Forbidden
	SW 201	1	Forbidden
		2	Forbidden
		3	Forbidden(Terminator selector switch 1)
		4	Forbidden(Terminator selector switch 2)

■ SWITCH POSITION

● Outdoor unit control circuit board

Main - PCB

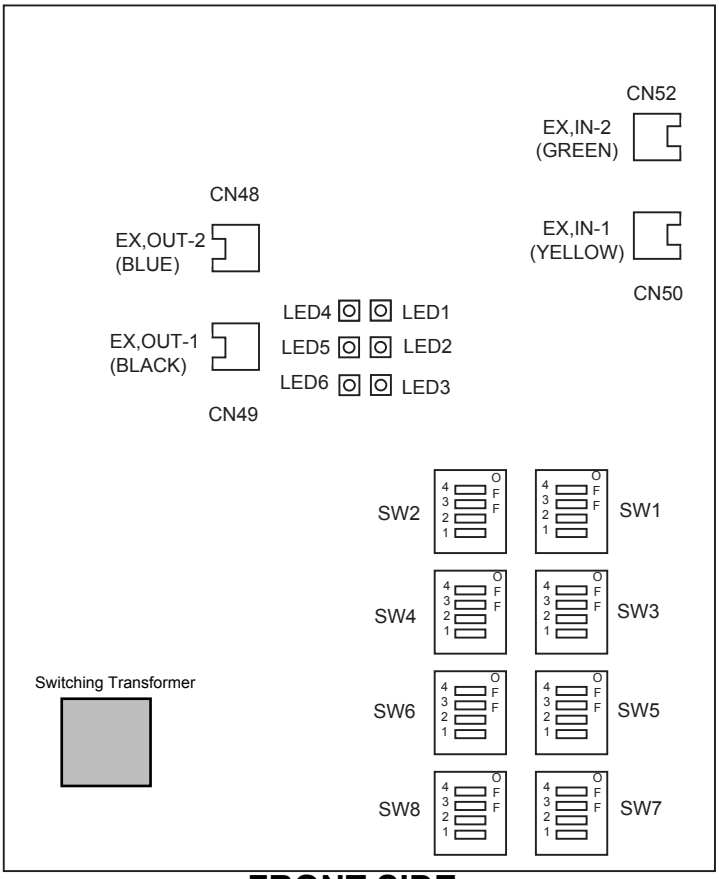

FRONT SIDE

P (Filter PWB)

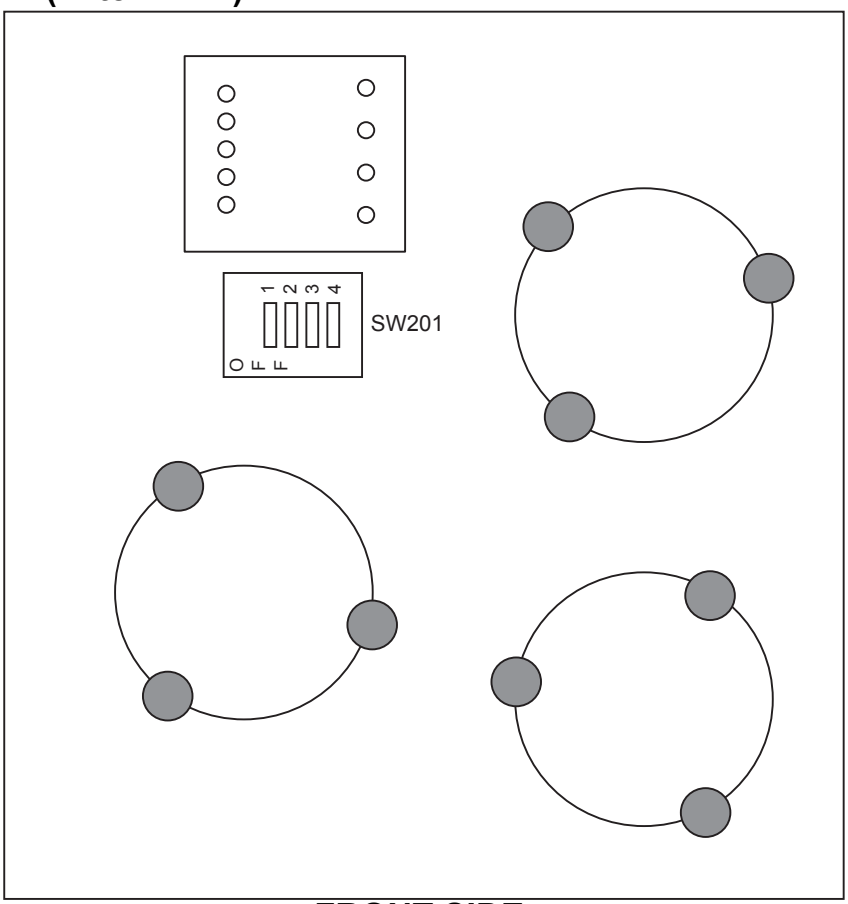

FRONT SIDE

2-1-3 WIRED, SIMPLE REMOTE CONTROLLER

Wired remote controller			Factory setting
DIP SW	1	Dual remote controller setting	ON
	2	Dual remote controller setting	OFF
	3	Forbidden	OFF
	4	Model setting	OFF
	5	Auto changeover setting	OFF
	6	Memory backup setting	OFF

Simple remote controller			Factory setting
DIP SW	1	Dual remote controller setting	ON
	2	Dual remote controller setting	OFF
	3	Forbidden	OFF
	4	Model setting	OFF
	5	Auto changeover setting	OFF
	6	Forbidden	OFF

■ SWITCH POSITION

● Wired remote controller

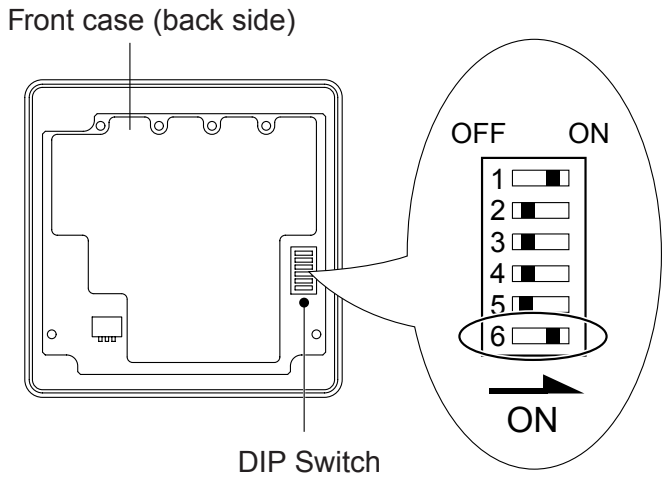

● Simple remote controller

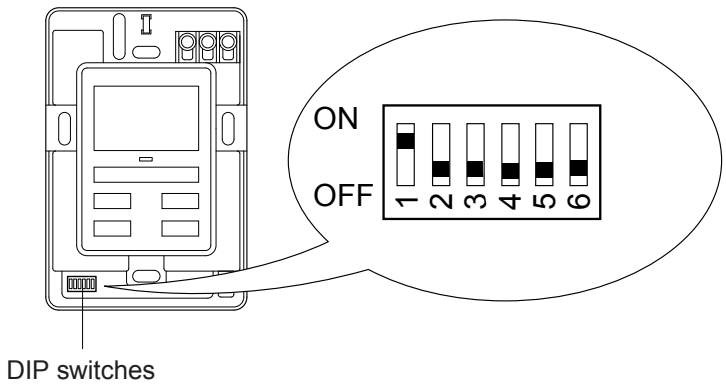

2-1-4 GROUP REMOTE CONTROLLER

Group remote controller			Factory setting
DIP SW	1	Memory backup setting	OFF
	2	Forbidden	OFF

■ SWITCH POSITION

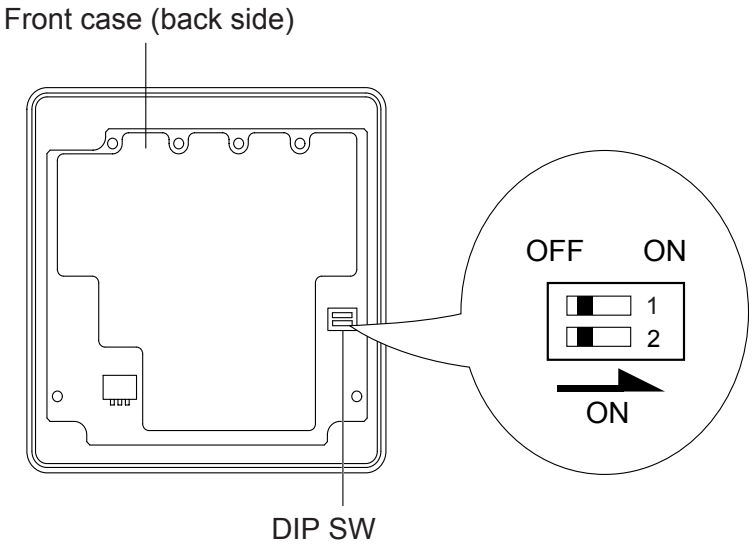

2-1-5 EXTERNAL SWITCH CONTROLLER

External switch controller				Factory setting
DIP SW	SW 1	1	MODE setting	OFF
		2		OFF
		3	Delay-time setting : Set to ON for switching operation mode in 1 minute after contact.	OFF
		4	Forbidden	ON
		5		OFF
		6		OFF
	SW 2	1	Operation mode setting of parameter setting 1 (P1)	OFF
		2		OFF
		3		OFF
		4		OFF
		5		OFF
		6		OFF
	SW 3	1		OFF
		2		OFF
		3		OFF
		4		OFF
		5	Setting contact input of SW1 at MODE 0	OFF
		6	Operation conditions : Set to ON when switched to P1 or P2 setting by contact input only during indoor unit is in operation.	OFF
	SW 4	1	Operation mode setting of parameter setting 2 (P2)	OFF
		2		OFF
		3		OFF
		4		OFF
		5		OFF
		6		OFF
	SW 5	1		OFF
		2		OFF
		3		OFF
		4		OFF
		5	Setting contact input of SW2 at MODE 0	OFF
		6	Cannot be used	ON

■ SWITCH POSITION

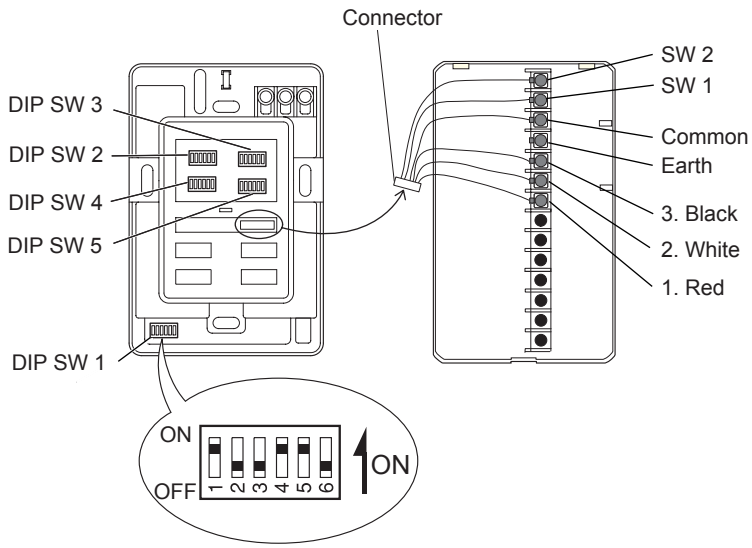

2-2 MICROPROCESSOR FUNCTION LIST

2-2-1 INDOOR UNIT

INDOOR UNIT TYPE			Compact Cassette	Thin Cassette	Large Cassette	Compact Duct	Low Static Pressure Duct
MODEL CODE		54			○		
		45			○		○
		36			○		○
		30		○			○
		25		○			○
		20 (22)		○		○	
		18	○			○	
		14	○			○	
		12	○			○	
		9	○			○	
		7	○			○	
	CN1	AC IN	○	○	○	○	○
	CN2	TH. FUSE	○	○	○	○	○
	CN3	FAN CAPA	○	○	○	○	○
	CN4	FAN MOTOR	○	○	○	○	○
	CN5	D. PUMP	○	○	○	○	○
	CN10	SP-M (U,D)	○	○	○	—	—
	CN11	SP-M (R,L)	—	—	—	—	—
	CN12	HEATER	○	○	○	○	○
	CN13	DISPLAY	○	○	○	○	○
	CN14	E.E.VALVE	○	○	○	○	○
	CN15	FLOAT SW	○	○	○	○	○
	CN16	MOTOR F. BACK	—	○	—	—	—
	CN17	REMOCON	○	○	○	○	○
	CN18	TEST	○	○	○	○	○
	CN19	R. TH	○	○	○	○	○
	CN20	P. TH	○	○	○	○	○
	CN22	EX. OUT1	○	○	○	○	○
	CN23	EX. OUT2	○	○	○	○	○
	CN24	EX. OUT3	○	○	○	○	○
	CN25	FLASH	○	○	○	○	○
	CN26	COMMUNICATION-PWB	○	○	○	○	○
	CN27	EX. IN	○	○	○	○	○
	CN101	NETWORK	○	○	○	○	○
	CN201	COMMUNICATION	○	○	○	○	○
	SW1	FUNCTION 1	○	○	○	○	○
	SW2	FUNCTION 2	○	○	○	○	○
	SW3	FUNCTION 3	○	○	○	○	○
	SW4	FUNCTION 4	○	○	○	○	○
	SW5	FUNCTION 5	○	○	○	○	○
	SW8	FORBIDDEN	○	○	○	○	○
	SW9	FORBIDDEN	○	○	○	○	○
	F101	FUSE 250V 3.15A	○	○	○	○	○
	F402	FUSE 250V 0.315A(COMMUNICATION)	○	○	○	○	○

INDOOR UNIT TYPE			Wall Mounted
MODEL CODE		30	○
		24	○
		18	○
	CN1	TH. FUSE	○
	CN2	FAN MOTOR	○
	CN3	FAN MOTOR	—
	CN4	D. PUMP	○
	CN6	DIFFUSER/SP-M(U,D)	○
	CN7	SP-M(L/R)	○
	CN8	DISPLAY-1	○
	CN9	DISPLAY-2	○
	CN10	F. BACK	—
	CN11	TEST	○
	CN12	E.E.VALVE	○
	CN13	REMOCON	○
	CN14	FLOAT	○
	CN15	NETWORK	○
	CN16	R.-TH	○
	CN17	P-TH	○
	CN19	FLASH	○
	CN20	HEATER	○
	CN21	EX. IN	○
	CN22	EX. OUT1	○
	CN23	EX. OUT2	○
	CN24	EX. OUT3	○
	CN25	COMMUNICATION-PWB	○
	CN26	COMMUNICATION	○
	SW1	FUNCTION 1	○
	SW2	FUNCTION 2	○
	SW3	FUNCTION 3	○
	SW4	FUNCTION 4	○
	SW5	FUNCTION 5	○
	SW8	FORBIDDEN	○
	SW9	FORBIDDEN	○
	F101	FUSE 250V 3.15A	○
	F402	FUSE 250V 0.315A(COMMUNICATION)	○

INDOOR UNIT TYPE		Compact Wall Mounted
MODEL CODE	14	○
	12	○
	9	○
	7	○
CN1	POWER-PWB	○
CN2	FAN F. BACK	○
CN3	E. E. VALVE	○
CN4	SP MOTOR(U,D)	○
CN5	DISPLAY	○
CN6	ROOM TH.	○
CN7	PIPE TH.	○
CN8	TEST	○
CN9	FLASH	○
CN10	EX. IN	○
CN11	EX. OUT	○
CN12	COMMUNICATION-PWB	○
CN101	MAIN-PWB	○
CN102	FAN MOTOR	○
CN103	TRANS-P	○
CN104	TRANS-S	○
CN105	TH. FUSE	○
CN107	NETWORK	○
CN108	COMMUNICATION	○
W101-102	POWER SUPPLY	○
W103-104	FAN CAPACITOR	○
SW1	FUNCTION	○
SW2	FUNCTION & UNIT ADDRESS	○
SW3	FORBIDDEN	○
SW5	FORBIDDEN	○
JM1	WIRELESS REMOTE CONTROLLER CUSTOM CODE	○
JM2	WIRELESS REMOTE CONTROLLER CUSTOM CODE	○
F101	FUSE 250V 3.15A	○
F402	FUSE 250V 0.315A(COMMUNICATION)	○

2-2-2 OUTDOOR UNIT

OUTDOOR UNIT TYPE		AO54UJA	AO54FJA
CN1	AC IN	○	○
CN2	FAN MOTOR1	○	○
CN4	S.V.1	○	○
CN5	S.V.2	○	○
CN6	4W.V.1	○	○
CN8	CRANK CASE HEATER	○	○
CN9	BASE HEATER	○	○
CN10	DC IN	○	○
CN11	CT	○	○
CN12	POWER RELAY	○	○
CN13	ACTIVE P.M.	○	○
CN14	IPM-DRIVE	○	○
CN15	IPM-POWER1	○	○
CN16	IPM-POWER2	○	○
CN17	E.E.V.1	○	○
CN19	PRESSURE SWITCH Hi	○	○
CN20	PRESSURE SWITCH Lo	○	○
CN21	DISCHARGE TH	○	○
CN22	PIPE 1 TH	○	○
CN24	H.E. CENTER TH	○	○
CN25	SUCTION TH	○	○
CN26	OUTDOOR TH	○	○
CN27	HEAT SINK	○	○
CN28	EXT. INPUT 1	○	○
CN29	EXT. INPUT 2	○	○
CN30	EXT. OUTPUT 1	○	○
CN31	EXT. OUTPUT 1	○	○
CN33	FLUSH MAIN	○	○
CN34	FLASH INV	○	○
CN35	COMMUNICATION	○	○
SW1	FUNCTION 1	○	○
SW2	FUNCTION 2	○	○
SW3	FUNCTION 3	○	○
SW4	FUNCTION 4	○	○
SW5	FUNCTION 5	○	○
SW6	FUNCTION 6	○	○
SW7	FUNCTION 7	○	○
SW8	FUNCTION 8	○	○
SW201	FUNCTION 9	○	○
F201	FUSE 250V 3.15A	○	○
F202	FUSE 250V 0.5A	○	○
F203	FUSE 250V 0.5A	○	○

2-3 FUNCTION AND SETTING OF EACH SWITCH

2-3-1 INDOOR UNIT

■ DIP SWITCH SETTING

(1) SW1 setting

1-1 DIP SW 1-1 and SW 1-2 setting forbidden

(◆・・・Factory setting)

◆	SW1-1	OFF
◆	SW1-2	OFF

1-2 Room temperature correct coefficient of heating.

Decide the heating temperature correct coefficient value for room temperature thermistor. The overall room temperature increases when a larger coefficient value is used.

HEATING TEMPERATURE CORRECTION (◆・・・Factory setting)

	SW1-3	SW1-4	Coefficient value
◆	OFF	OFF	+ 2 deg
	ON	OFF	- 2 deg
	OFF	ON	0 deg
	ON	ON	+ 4 deg

(2) SW2 setting

2-1 Room temperature correct coefficient of cooling.

Decide the cooling temperature correct coefficient value for room temperature thermistor. The overall room temperature decreases when a larger coefficient value is used.

COOLING TEMPERATURE CORRECTION (◆・・・Factory setting)

	SW2-1	Coefficient value
◆	OFF	0 deg
	ON	+ 2 deg

2-2 DIP SW 2-2 and SW 2-3 setting forbidden

(◆・・・Factory setting)

◆	SW2-2	OFF
◆	SW2-3	OFF

2-4 Auto restart validity / invalidity.

Control the auto restart function by turning this switch ON/OFF.

AUTO RESTART SETTING (◆・・・Factory setting)

	SW2-4	Auto restart
◆	OFF	Invalidity
	ON	Validity

SW3 setting (Never change at the site)

3-1 Indoor unit fan speed switch

This switch can select fan speed corresponding to each model.

∗Cassette type

	AU20	AU25	AU30	AU36	AU45	AU54
SW3-1	ON	OFF	OFF	OFF	ON	OFF
SW3-2	ON	ON	OFF	ON	OFF	OFF
SW3-3	ON	ON	ON	OFF	OFF	OFF

∗Wall mounted type

	AS18	AS24	AS30
SW3-1	OFF	OFF	ON
SW3-2	OFF	ON	ON
SW3-3	ON	ON	ON

∗Other model (Default)

SW3-1	OFF
SW3-2	OFF
SW3-3	OFF

3-2 DIP SW 3-4 setting

This switch is used to select the format of external input command as shown in the table below.

(◆・・・Factory setting)

	SW3-4	External input select
◆	OFF	Edge
	ON	Pulse

(3) SW4 setting (Never change at the site)

Indoor unit model code.
This switch for changing the model code information of indoor unit PCB.

INDOOR UNIT MODEL CODE

Type \ MODEL CODE	54	45	36	30	25(24)	20(22)	18	14	12	9	7
SW4-1	OFF	ON	OFF	ON	OFF	ON	OFF	ON	OFF	ON	OFF
SW4-2	ON	OFF	OFF	ON	ON	OFF	OFF	ON	ON	OFF	OFF
SW4-3	OFF	OFF	OFF	ON	ON	ON	ON	OFF	OFF	OFF	OFF
SW4-4	ON	ON	ON	OFF	OFF	OFF	OFF	OFF	OFF	OFF	OFF

(4) SW5 setting

5-1 Wireless remote controller custom code switch

Decid the custom code and restrict the type of infrared control signal, in order to prevent mixing of multiple indoor unit signals.

Remote controller custom code switch

(◆ ▪ ▪ ▪Factory setting)

	SW5-1	SW5-2	Custom code
◆	OFF	OFF	Type A
	ON	OFF	Type B
	OFF	ON	Type C
	ON	ON	Type D

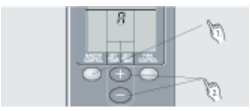

1. Press the MASTER CONTROL button for more than five seconds to start the code change.
2. Press the (+) or (-) button to select the desired code. → A → B → C → D
3. Press the MASTER CONTROL button again to end the code change.

5-2 DIP SW 5-3 setting forbidden

5-3 Draft prevention setting switch (only for cassette type)

Set the flap angle of cassette type unit.

Draft prevention switch

(◆ ▪ ▪ ▪Factory setting)

	SW5-4	Flap angle
◆	OFF	Normal position
	ON	Draft prevention position

Normal position	Draft prevention position
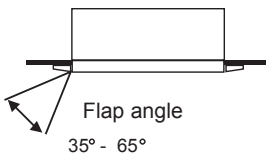	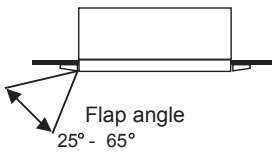

An air flow direction, by moving the flap angle horizontally, It can prevent that a cold wind directly hits.

*If air conditioning cooling operation is performed in long time and a humid place, there is a possibility that waterdrop may hang down from a blow-off mouth.

■ EXTERNAL INPUT AND OUTPUT

Connector	Indoor unit type	Input	Output	Remarks
CN21	Wall mounted	CONTROL INPUT (OPERATION / STOP)	——	See 2-4-1 for details
CN27	Other types			
CN22	All types	——	OPERATION DISPLAY (DC12V)	
CN23			ERROR DISPLAY (DC12V)	
CN24			INDOOR UNIT FAN STATUS DISPLY(DC12V)	

SWITCH FUNCTION (COMPACT WALL MOUNTED TYPE)

■DIP SWITCH SETTING

(1) SW1 setting (Never change at the site)

1-1 Fan speed setting switch

The fan speed corresponding to each model is set with the switch.

	AS7	AS9	AS12	AS14
SW1-1	OFF	ON	OFF	ON
SW1-2	OFF	OFF	ON	ON

1-2 Model code setting switch

The model code infomation corresponding to each model is provided with the switch.

	AS7	AS9	AS12	AS14
SW1-3	OFF	ON	OFF	ON
SW1-4	OFF	OFF	ON	ON

(2) SW2 setting

2-1 Dip SW 2-1,2-2 setting forbidden

(◆・・・Factory setting)

◆	SW2-1	OFF
◆	SW2-2	OFF

2-2 Auto restart validity / invalidity.

The auto restart function becomes validity by changing the switch position from OFF to ON.

AUTO RESTART SETTING (◆・・・Factory setting)

	SW2-3	Auto restart
◆	OFF	Invalidity
	ON	Validity

2-3 DIP SW 2-4 setting forbidden.

(◆・・・Factory setting)

◆	SW2-4	OFF

■ EXTERNAL INPUT AND OUTPUT

Connector	Input	Output	Remarks
CN10	CONTROL INPUT (OPERATION / STOP) Edge select	——	See 2-4-1 for details
CN11	——	OPERATION DISPLAY (DC12V)	

■ JUMPER WIRE

Wireless remote controller custom code switch

Limit the type of infrared control signal which the indoor unit is controlled,in order to prevent misoperation of the unit due to the signal from other wirless remote controller.

Remote controller custom code switch

(◆ ▪ ▪ ▪Factory setting)

	JM 1	JM 2	Custom code
◆	Connect	Connect	Type A
	Disconnect	Connect	Type B
	Connect	Disconnect	Type C
	Disconnect	Disconnect	Type D

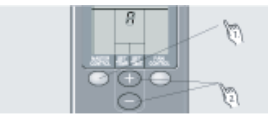

1. Press the MASTER CONTROL button for more than five seconds to start the code change.
2. Press the (+) or (-) button to select the desired code. → A → B → C → D
3. Press the MASTER CONTROL button again to end the code change.

■DIP SWITCH SETTING

(1) SW1 setting

1-1 Test run (cooling & Heating)

All the indoor units connected to the outdoor unit can be test-operated by DIP switch setting.

SELECTOR SWITCH FOR TEST RUN AND NORMAL OPERATION (◆・・・Factory setting)

	SW1-1	SW1-2	Test Run	Remarks
◆	OFF	OFF	Normal operation	
	ON	OFF	Cooling test run	SW1-1 / SW1-2 : OFF / OFF or ON / ON → ON / OFF
	OFF	ON	Heating test run	SW1-1 / SW1-2 : OFF / OFF or ON / ON → ON / OFF
	ON	ON	Normal operation	

1-2 Pump down operation

Pump down operation is set with SW1- 3

PUMP DOWN OPERATION (◆・・・Factory setting)

	SW1-3	Pump down operation	Remarks
◆	OFF	Release	
	ON	Operate	OFF → ON and be kept at ON position for more than 40 sec.

1-3 Forced oil recovery operation

Forced oil recovery operation is set with SW1- 4

FORCED OIL RECOVERY OPERATION (◆・・・Factory setting)

	SW1-4	Forced oil recovery operation	Remarks
◆	OFF	Release	
	ON	Operate	OFF → ON and be kept at ON position for more than 10 sec.

(2) SW2 setting

2-1 Silent operation mode

For a reduction of noise level at night, the operating mode of the outdoor unit can be switched. (In the cooling mode only.)

SILENT OPERATION MODE (◆・・・Factory setting)

	SW 2-1	Silent operation mode
◆	OFF	Release
	ON	Operate

2-2 SW 2-2

DIP SW 2-2 setting Forbidden

SW2-2	OFF

2-3 Electric current selector switch 1 and 2

Upper limit of electric current is set by DIP switches 2-3 and 2-4 according to the current limit. Depending on the local power supply condition ,the breaker capacity can be selected in 4 steps.

(◆・・・Factory setting)

	SW2-3	SW2-4	Circuit Breaker capacity (A)
◆	OFF	OFF	30
	OFF	ON	25
	ON	OFF	20
	ON	ON	15

(3) SW3 setting

Dip SW3-1,3-2,3-3,3-4 setting forbidden.

SW3-1	OFF
SW3-2	OFF
SW3-3	OFF
SW3-4	OFF

(4) SW4 setting

Dip SW4-1,4-2,4-3,4-4 setting forbidden.

SW4-1	OFF
SW4-2	OFF
SW4-3	OFF
SW4-4	OFF

(5) SW5 setting

5-1 Cooling capacity shift switch

The cooling and heating capacity can be changed by using this DIP switch.

(◆・・・Factory setting)

	SW5-1	SW5-2	CAPACITY SHIFT
◆	OFF	OFF	Normal mode
	OFF	ON	Save energy mode
	ON	OFF	High power mode 1
	ON	ON	High power mode 2

5-2 Heating capacity shift switch

(◆・・・Factory setting)

	SW5-3	SW5-4	CAPACITY SHIFT
◆	OFF	OFF	Normal mode
	OFF	ON	Save energy mode
	ON	OFF	High power mode 1
	ON	ON	High power mode 2

(6) SW6 setting

6-1 Pipe length switch

SW setting can provide the operation to supplement the loss created by the pipe length.

(◆ ▪ ▪ ▪Factory setting)

	SW 6-1	SW 6-2	PIPE LENGTH	Recommended Range of L (m)
◆	OFF	OFF	Standard	7.5 < L ≦ 50
	ON	ON	Pipe length L	50 < L ≦ 70

6-2 Dip SW 6-3 & 6-4 Defrost temperature shift switch

Depending on the frost condition of outdoor unit's heat exchanger under different surrounding environment, the defrost start and finish temperature can be changed.

(◆ ▪ ▪ ▪Factory setting)

	SW 6-3	SW 6-4	DEFROST START	DEFROST FINISH
◆	OFF	OFF	-10	10
	ON	OFF	-7	10
	OFF	ON	-15	20
	ON	ON	-10	15

(7) SW7 setting (Never change at the site)

7-1 System type switch 1

The outdoor unit model can be selected by setting DIP switch 7-1 on the PCB.
(Heat pump / Cooling only)

OUTDOOR UNIT TYPE SELECTION

(◆ ▪ ▪ ▪Factory setting)

SW7-1	Type selection	
OFF	Heat pump	◆ Heat pump type
ON	Cooling only	◆ Cooling only type

7-2 DIP SW7-2 setting forbidden

(◆ ▪ ▪ ▪Factory setting)

◆	SW7-2	OFF

7-3 Model code switch

MODEL CODE SWITCH (◆ ▪ ▪ ▪Factory setting)

	SW7-3	MODEL CODE
◆	OFF	54
	ON	Forbidden

7-4 Refrigerant type switch

REFRIGERANT TYPE SWITCH (◆ ▪ ▪ ▪Factory setting)

	SW7-4	REFRIGERANT TYPE
◆	OFF	R410A
	ON	Forbidden

※ SW7 has been set up at the factory.
There is no need to set it up at the installation.

(8) SW8 setting

8-1 System type switch 3 and 4

Refrigerant system type can be set by DIP switches 8-1 and 8-2

Refrigerant system type (◆・・・Factory setting)

	SW8-1	SW8-2	System type
◆	OFF	OFF	VRF type
	ON	OFF	Forbidden
	OFF	ON	Forbidden
	ON	ON	Forbidden

8-2 SW 8-3 and 8-4

DIP SW 8-3 and 8-4 setting Forbidden

SW8-3	OFF
SW8-4	OFF

(9) SW201 setting

9-1 DIP SW 201 setting

DIP SW 201 setting Forbidden

SW201-1	OFF
SW201-2	OFF
SW201-3	OFF
SW201-4	OFF

■ EXTERNAL INPUT AND OUTPUT

Connector	Input	Output
CN48	————	Operation Display (DC12V)
CN49	————	Error Display (DC12V)
CN50	OFF: Remote controller priority ON: External Input priority	————
CN52	Cool or Heat Select switch	————

2-3-3 DIP-SW FUNCTION (WIRED, SIMPLE REMOTE CONTROLLER)

Always set the DIP SW before turning the power on.

■DIP SWITCH SETTING

(1) Dual remote controller setting

Two separate remote controllers can be used to operate the same indoor unit.

Set the DIP SW 1,2 according to the following table.

(◆ . . . Factory setting)

Number of remote controllers	Master unit		Slave unit	
	DIP SW1	DIP SW2	DIP SW1	DIP SW2
◆ 1 (Normal)	ON	OFF	—	—
2 (Dual)	OFF	OFF	ON	ON

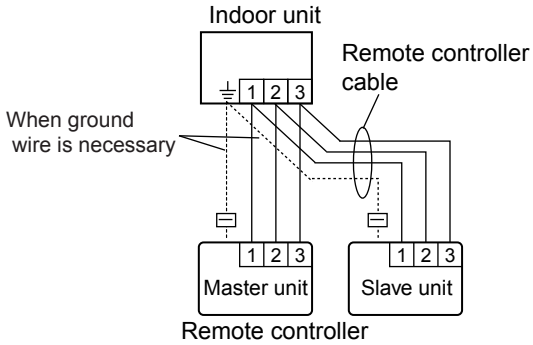

(2) SW 3 setting forbidden

(3) Model setting

(◆ . . . Factory setting)

SW4	Model setting
◆ OFF	Heat Pump
ON	Cooling only

(5) Auto change over validity/invalidity

Selecting auto change over validity/invalidity. Never turn it ON in the case of heat pump model.

(◆ . . . Factory setting)

SW5	Auto change over
◆ OFF	Invalidity
ON	Validity

(6) Memory backup switch

Set to ON to use batteries for the memory backup. If batteries are not used,

all of the settings stored in memory will be deleted if there is a power failure.

※This function is available for wired remote controller only. Setting for simple remote controller is forbidde

(◆ . . . Factory setting)

SW6	Battery backup
◆ OFF	Invalidity
ON	Validity

2-3-4 DIP-SW FUNCTION (GROUP REMOTE CONTROLLER)

■ DIP SWITCH SETTING

Set DIP switch to ON to enable the memory backup.

1-1 Memory backup setting

If batteries are not used, all of the settings stored in memory will be deleted if there is a power failure.

(◆ ▪ ▪ ▪Factory setting)

	SW1	Memory backup
◆	OFF	Invalidity
	ON	Validity

1-2 DIP SW 2 setting forbidden

(◆ ▪ ▪ ▪Factory setting)

◆	SW2	OFF

2-3-5 DIP-SW FUNCTION (EXTERNAL SWITCH CONTROLLER)

WIRING DIAGRAM

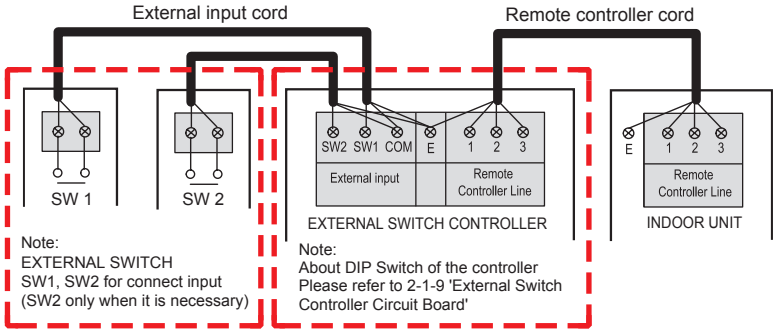

■ DIP SWITCH SETTING

(1) SW1 setting

1-1 MODE setting

(◆・・・Factory setting)

	SW1-1	SW1-2	MODE setting	Detail
◆	OFF	OFF	MODE 0	This MODE sets to P1 operation mode if SW1 has a contact input of DIP-SW3-5. This MODE sets to P2 operation mode if SW2 has a contact input of DIP-SW5-5.
	OFF	ON	MODE 1	This MODE sets to P1 operation mode if a contact of SW1 is switched ON ⇒ OFF. This MODE sets to P2 operation mode if a contact of SW1 is switched OFF⇒ON.
	ON	OFF	MODE 2	This MODE sets to P1 operation mode in 1 minute after stop operation if a contact of SW1 is switched ON ⇒ OFF. This MODE sets to P2 operation mode in 1 minute after stop operation if a contact of SW1 is switched OFF ⇒ ON.
	ON	ON	No setting	

Example :

① MODE 0
DIP-SW3-5 : ON
DIP-SW5-5 : OFF

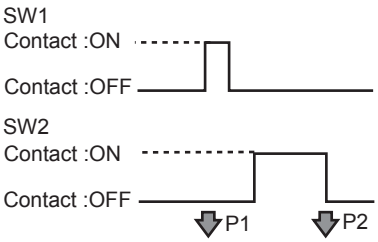

② MODE 1

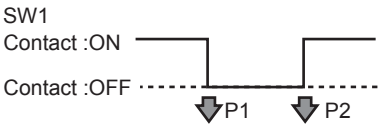

③ MODE 2

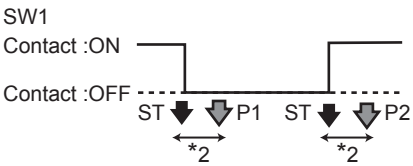

*1 : ST means "Stop operation".
*2 : If the indoor unit is operated between ST and P1 or ST and P2, it may not be set at the operational status of P1 or P2.

1-2 Delay-time setting

Set to ON for switching operation mode in 1 minute after contact.

(◆・・・Factory setting)

	SW1-3	Delay-time setting
◆	OFF	Instant (200 msec)
	ON	Delay (1 min)

1-3 DIP SW 1-4, 1-5, 1-6 setting forbidden

(◆・・・Factory setting)

	SW1-4	ON
◆	SW1-5	OFF
	SW1-6	OFF

(2) SW2, SW3 setting

2-1 Operation mode setting

Set DIP SW2 and 3 for P1, according to the following table.

SW2-1	SW2-2	Operation
OFF	OFF	Not applicable
OFF	ON	OFF
ON	OFF	ON
ON	ON	SET BACK *1

SW3-1	SW3-2	Operation mode
OFF	OFF	Not applicable
OFF	ON	COOL
ON	OFF	HEAT *2*3
ON	ON	Not setting

SW3-3	SW3-4	Fan speed
OFF	OFF	Not applicable
OFF	ON	HIGH
ON	OFF	MID
ON	ON	LOW

SW2-3	SW2-4	SW2-5	SW2-6	Set temperature
OFF	OFF	OFF	OFF	Not applicable
OFF	OFF	OFF	ON	16°C *2*3
OFF	OFF	ON	OFF	17°C *2*3
OFF	OFF	ON	ON	18°C
OFF	ON	OFF	OFF	19°C
OFF	ON	OFF	ON	20°C
OFF	ON	ON	OFF	21°C
OFF	ON	ON	ON	22°C
ON	OFF	OFF	OFF	23°C
ON	OFF	OFF	ON	24°C
ON	OFF	ON	OFF	25°C
ON	OFF	ON	ON	26°C
ON	ON	OFF	OFF	27°C
ON	ON	OFF	ON	28°C
ON	ON	ON	OFF	29°C
ON	ON	ON	ON	30°C

*1 Setting of SETBACK turns back the operation state to that of before switching parameter setting. (Example on the right shows that the operation state is set back to before switching to P1 setting.)

*2 Do not set the operation mode “HEAT”, or the setting temperature “16°C” or “17°C” for COOLING ONLY MODEL.
These settings do not function.

*3 Units cannot operate correctly under the settings shown below:
- Set the operation mode to “HEAT” and temperature to “16°C” or “17°C” during operation in Cooling priority
- Set the operation mode to “COOL” during operation in Heating priority
- Set the Fan speed during the operation mode “DRY”.

Ex. MODE 1, P2 is SETBACK.

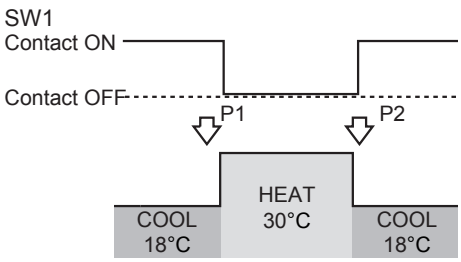

2-2 Contact input

Setting contact input of SW1 at MODE 0.

(◆ ▪ ▪ ▪Factory setting)

	SW3-5	Contact input
◆	OFF	ON → OFF
	ON	OFF → ON

2-3 Operation conditions

Set to ON when switched to P1 or P2 setting by contact input only during indoor unit is in operation.

(◆ ▪ ▪ ▪Factory setting)

	SW3-6	Operation conditions
◆	OFF	No condition
	ON	Unit in operation only

(3) SW4, SW5 setting

3-1 Operation mode setting

Set DIP SW4 and 5 for P2, according to the following table.

SW4-1	SW4-2	Operation
OFF	OFF	Not applicable
OFF	ON	OFF
ON	OFF	ON
ON	ON	SET BACK *1

SW5-1	SW5-2	Operation mode
OFF	OFF	Not applicable
OFF	ON	COOL
ON	OFF	HEAT *2*3
ON	ON	Not setting

SW5-3	SW5-4	Fan speed
OFF	OFF	Not applicable
OFF	ON	HIGH
ON	OFF	MID
ON	ON	LOW

SW4-3	SW4-4	SW4-5	SW4-6	Set temperature
OFF	OFF	OFF	OFF	Not applicable
OFF	OFF	OFF	ON	16°C *2*3
OFF	OFF	ON	OFF	17°C *2*3
OFF	OFF	ON	ON	18°C
OFF	ON	OFF	OFF	19°C
OFF	ON	OFF	ON	20°C
OFF	ON	ON	OFF	21°C
OFF	ON	ON	ON	22°C
ON	OFF	OFF	OFF	23°C
ON	OFF	OFF	ON	24°C
ON	OFF	ON	OFF	25°C
ON	OFF	ON	ON	26°C
ON	ON	OFF	OFF	27°C
ON	ON	OFF	ON	28°C
ON	ON	ON	OFF	29°C
ON	ON	ON	ON	30°C

*1 Setting of SETBACK turns back the operation state to that of before switching parameter setting. (Example on the right shows that the operation state is set back to before switching to P2 setting.)

*2 Do not set the operation mode “HEAT”, or the setting temperature “16°C ” or “17°C ” for COOLING ONLY MODEL.
These settings do not function.

*3 Units cannot operate correctly under the settings shown below:
- Set the operation mode to “HEAT” and temperature to “16°C” or “17°C” during operation in Cooling priority
- Set the operation mode to “COOL” during operation in Heating priority
- Set the Fan speed during the operation mode “DRY”.

Ex. MODE 1, P2 is SETBACK.

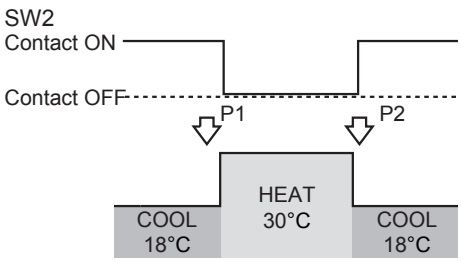

3-2 Contact input

Setting contact input of SW2 at MODE 0.

(◆ ▪ ▪ ▪Factory setting)

	SW5-5	Contact input
◆	OFF	ON → OFF
	ON	OFF → ON

3-3 DIP SW5-6 setting forbidden

(◆ ▪ ▪ ▪Factory setting)

◆	SW5-6	ON

2-4 EXTERNAL INPUT & OUTPUT

2-4-1 INDOOR UNIT

(1) Control input (Operation/Stop)

Indoor unit can be operated or stopped by using CN27 of indoor unit PCB

※ Requirement for control input:

Resistance ≦ 500 (ohm) (Switch : ON)
Resistance ≧ 100 (kilo-ohm) (Switch : OFF)
A twisted pair cable [22AWG, wire length ≦ 25m] should be used.

① Input select

DIP SW3-4	Input select
OFF	Edge
ON	Pulse

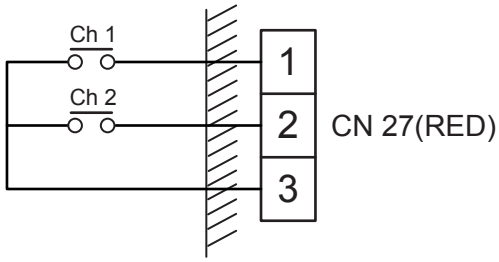

② In the case of "Edge" input

Connector (RED)	Input Signal	Command
Ch1 of CN27	OFF → ON	Operation
	ON → OFF	Stop

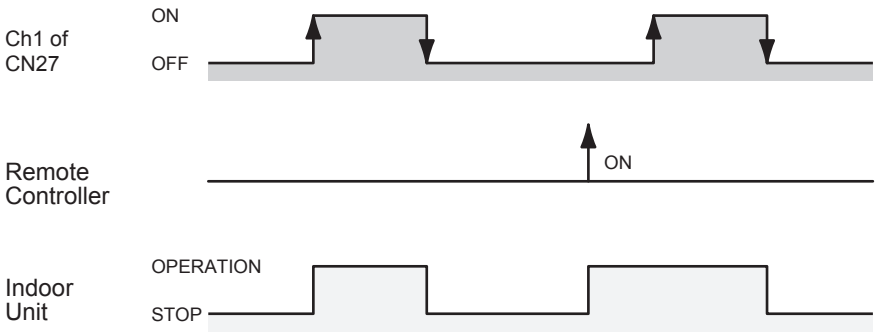

NOTE

1. The last command has priority.
2. The wire connection shall be separate from the power cable line.

③ In the case of "pulse" input

Connector (RED)		Input signal	Command
CN27	Ch 1	OFF → ON	Operation
	Ch 2	OFF → ON	Stop

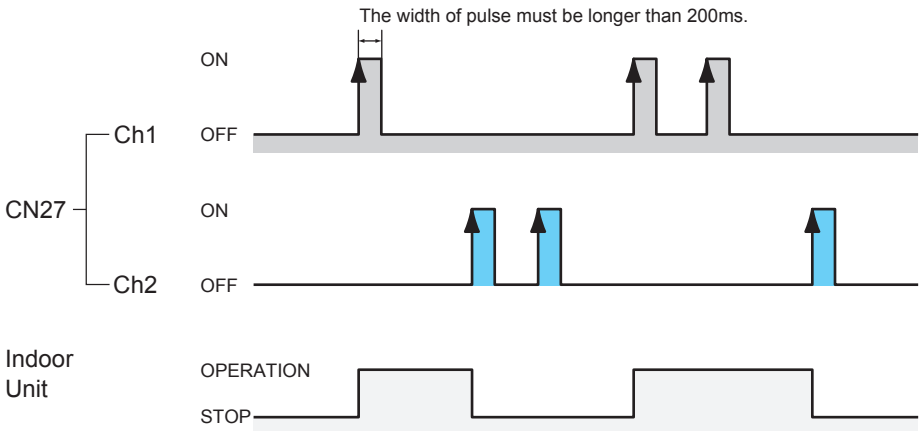

(2) Output

※ Requirement for output:

A twisted pair cable [22AWG, wire length ≦ 25m] should be used.

Connector	Output	Status
CN22 (WHITE)	12 ± 2.0V (≦15mA)	Operation
	0 ± 2.0V	Stop
CN23 (WHITE)	12 ± 2.0V (≦15mA)	Error
	0 ± 2.0V	Normal
CN24 (WHITE)	12 ± 2.0V (≦15mA)	Fan run
	0 ± 2.0V	Fan stop

① Operation display

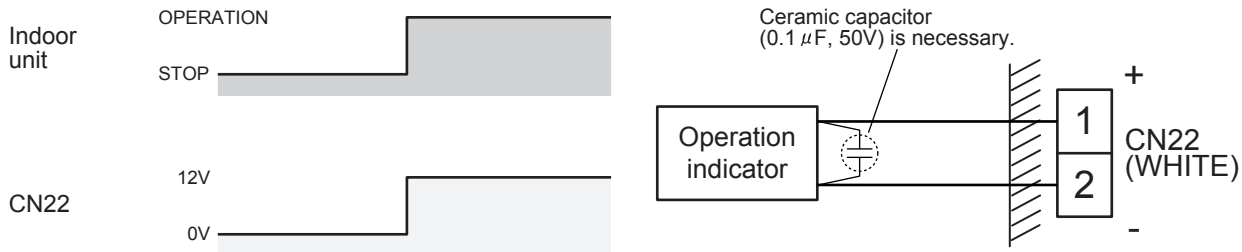

② Error display

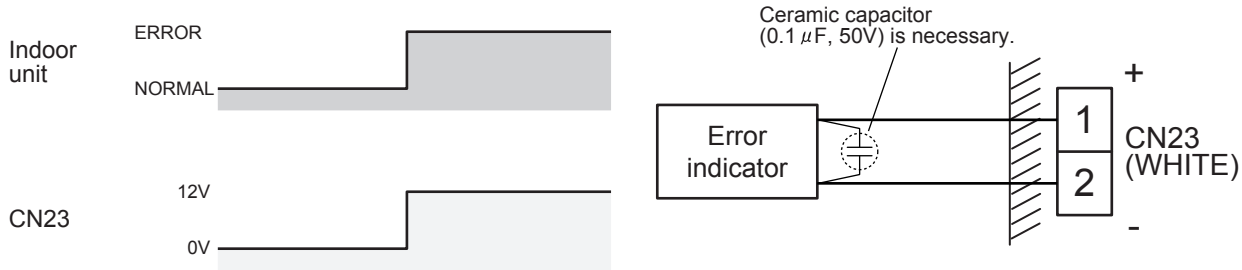

③ Inter locking output with indoor unit fan

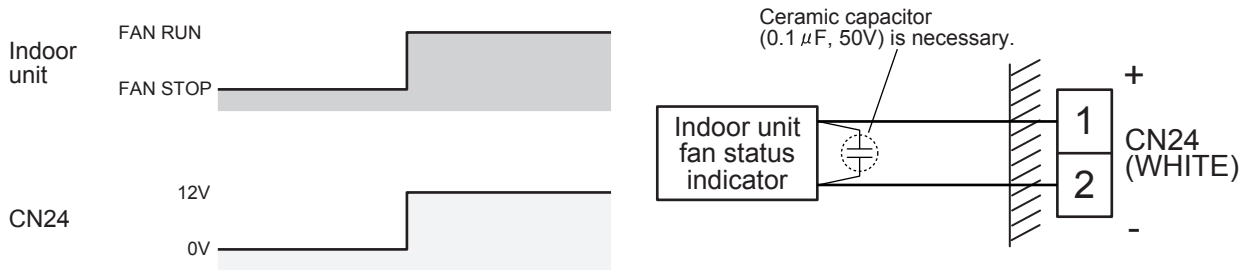

EX) Used for inter lock energize for exhaust fan.

(3) Parts

Following cord (service parts) is required. Please use the parts number shown below to order the cord from your sales representative.

Usage	Name and shapes	Q'ty	Parts No.
For output port	EXTERNAL INPUT WIRE 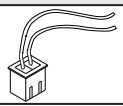	1	9368778002
For control input port	EXTERNAL INPUT WIRE 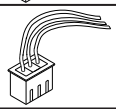	1	9368779009

2-4-2 INDOOR UNIT (COMPACT WALL MOUNTED)

(1) Control input (Operation/Stop)

Indoor unit can be operated or stopped by using the connector CN10(RED) on indoor unit PCB.

CONNECTOR	INPUT SIGNAL	COMMAND
CN10 (RED)	OFF ⟶ ON	Operation
	ON ⟶ OFF	Stop

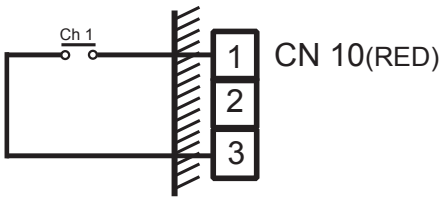

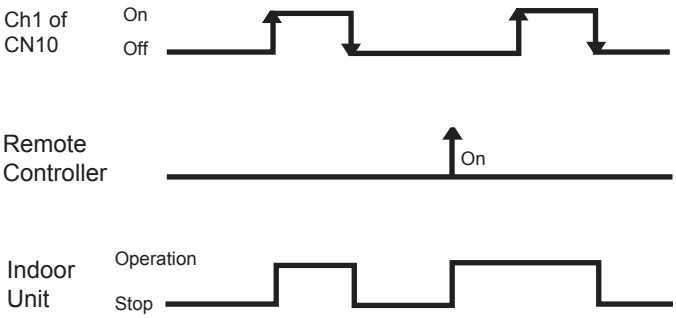

Open circuit voltage : ≦ 5.25 (V).
Short circuit current : ≦ 0.6 (mA).
Short circuit detection resistance (R_{ON}) : ≦ 500 (ohm).
Open circuit detection resistance (R_{OFF}) : ≧ 100 (kilo-ohm).

NOTE

1. The last command has priority.
2. The wire connection shall be separate from the power cable line.

(2) Output

CONNECTOR	OUTPUT ※5)	STATUS
CN11 (WHITE)	≧ 10 V; (≦ 15 mA)	Operation
	≦ 2 V; (≒ 0mA)	Stop

※5) Output of open collector circuit.

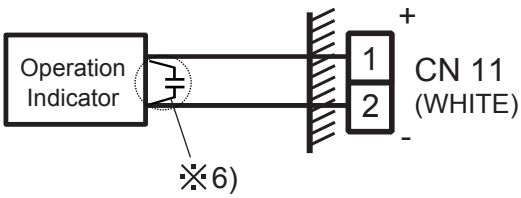

Operation display

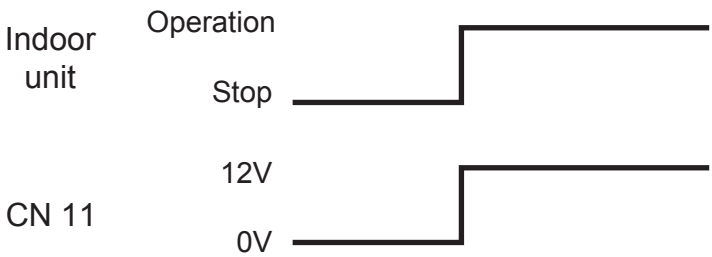

※6) If the indicator malfunctions, please insert a ceramic capacitor (0.1 μF ± 20%, ≧ 25V) near the input port of the equipment.

(3) Parts

Following cord (service parts) is required. Please use the parts number shown below to order the cord from your sales representative.

Usage	Name and shapes	Q'ty	Parts No.
For output port	EXTERNAL INPUT WIRE 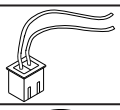	1	9368778002
For control input port	EXTERNAL INPUT WIRE 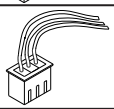	1	9368779009

2-4-3 OUTDOOR UNIT

(1) Input

Heat and Cool switch (Heat pump type only)

"Cooling priority" or "Heating priority" can be selected by this input.

CONNECTOR	INPUT SIGNAL	STATUS	REMARKS
CN50 (YELLOW)	OFF	Remote Controller priority	
	ON	External input priority	
CN52 (GREEN)	OFF	Cooling priority	CN50 need to be "ON".
	ON	Heating priority	

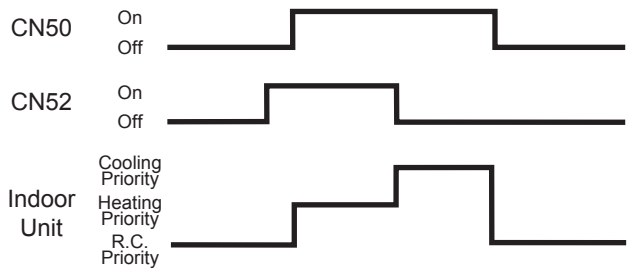

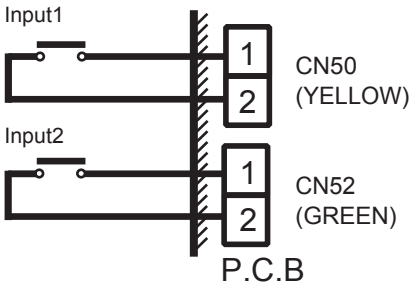

Open circuit voltage : ≦ 5.25 (V).
Short circuit current : ≦ 0.6 (mA).
Short circuit detection resistance (RON) : ≦ 500 (ohm).
Open circuit detection resistance (ROFF) : ≧ 100 (kilo-ohm).

(2) Output

① Operation display

This output indicates the outdoor unit's "Operation" status.

② Error display

This output indicates the outdoor unit and connected indoor unit's "Normal" or "Error" status.

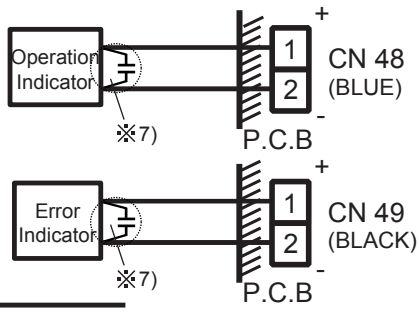

CONNECTOR	OUTPUT ※8)	STATUS
CN48 (BLUE)	≧ 10 V; (≦ 100 mA)	Operation
	≦ 2 V; (≒ 0mA)	Stop
CN49 (BLACK)	≧ 10 V; (≦ 100 mA)	Error
	≦ 2 V; (≒ 0mA)	Normal

※8) Output of open collector circuit.

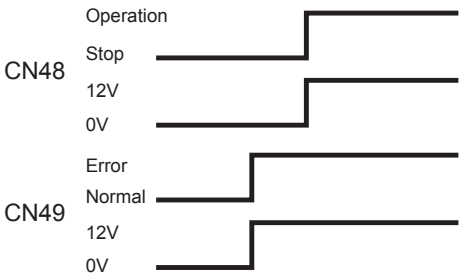

※ 7) If the indicator malfunctions, please insert a ceramic capacitor (0.1μF ± 20%, ≧ 25V) near the input port of the equipment.

③ Base heater output

Turn ON when the ambient temperature is low in heating mode.(3℃ or less)

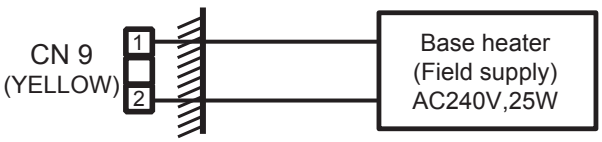

(3) Parts

Following cord (service parts) is required. Please use the parts number shown below to order the cord from your sales representative.

Usage	Name and shapes	Q'ty	Parts No.
For base heater port	BASE HEATER WIRE	1	9374796014
For input & ouput port	EXTERNAL INPUT WIRE	1	9368777005

2-4-4 GROUP REMOTE CONTROLLER CONVERTER

(1) Control input

① Input select

7 Segment	Input select
00	External input function invalidity
01	Edge
02	Pulse

※ Refer to the next page for setting operation.

② In the case of "Edge" input

Connector		Input Signal	Command
CN451	CN1	OFF → ON	All ON
		ON → OFF	All OFF

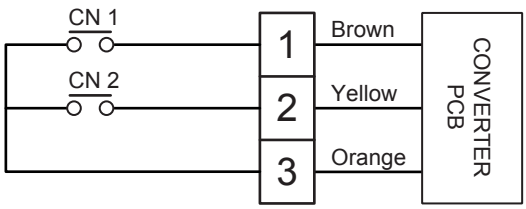

Open circuit voltage : 12 (V) ±5%.
Short circuit current : ≦2 (mA).
Short circuit detection resistance (R_{ON}) : ≦500 (ohm).
Open circuit detection resistance (R_{OOF}) : ≧100 (kohm).

< Operation >

When it inputs GND short signal of 200ms or more to terminal 1, it transfers this operation signal to all indoor units on this network. When it inputs GND open signal of 200ms or more to terminal 1, it transfers this stop signal to all indoor unit on the this network.
However, it is limited when ther is a change in the state.
(The operating signal has been output → GND short signal is 200ms or more.
The stop signal has been output → GND open signal is 200ms or more).

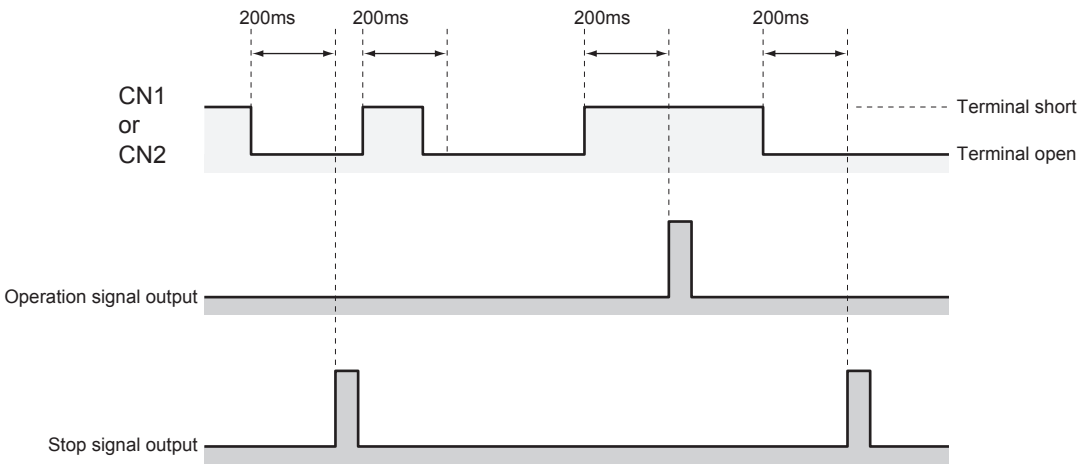

③ In the case of "pulse" input

Connector		Input signal	Command
CN451	CN1	OFF → ON	All ON
	CN2	OFF → ON	All OFF

< Operation >

When it inputs GND short signal of 200ms or more to terminal 1, it transfers this operation signal to all indoor units on this network.

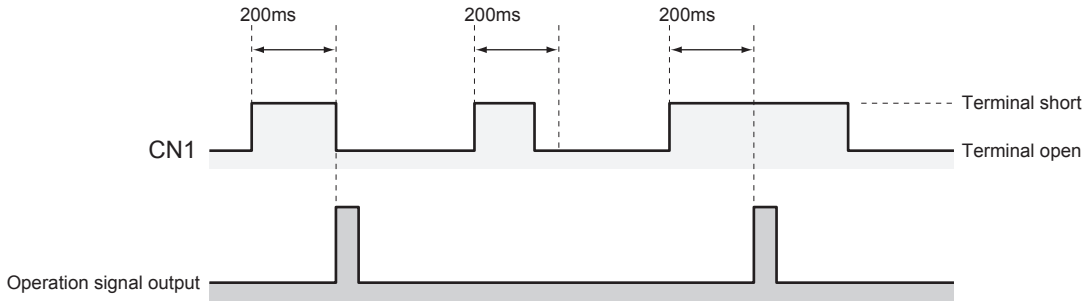

When it inputs GND short signal of 200ms or more to terminal 2, it transfers this operation signal to all indoor units on this network.

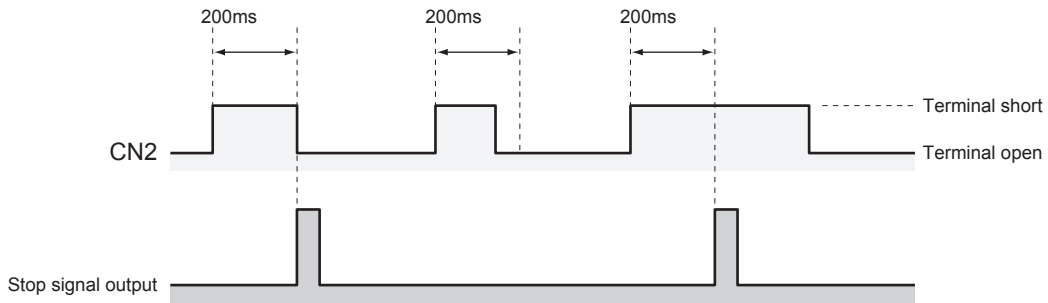

(1) Group remote controller converter (How to set operation)

Setting of external input function selection.

- It is necessary to set a initial parameter setting on the PCB of thegroup remote converter.
- An external input setting is invalid on factory setting. It set up to use the button on the main PCB.

① At first, connect indoor unit, Group remote converter and Group remotecontroller.

And next, the setting begins from the state of supplying the power supply.
Red LED lights up while in this condition.

② Push the "MODE" button on the group remote converter main PCB.

- It displays " - Pr - " on the 7 segment (monitor lamps). Following the fig.

- The display changes as follows. (2 seconds)

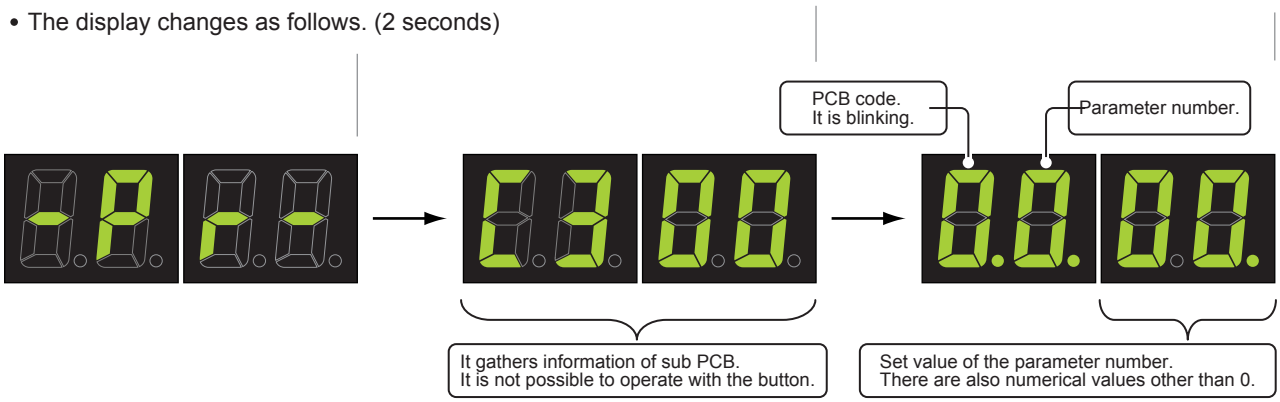

③ Push the "UP" or "DOWN" button.

- Select the code "2" as follows by using "UP" or "DOWN" button.
- The blinking digit can be increased or dereased with the "UP" or "DOWN" button.

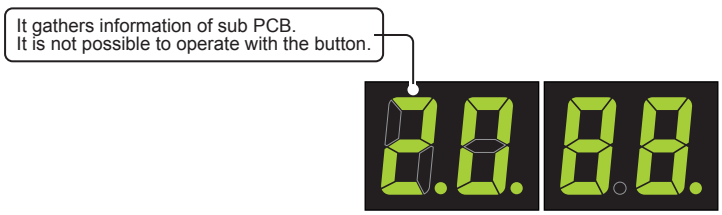

④ Push the "SELECT" key.

- The right display (parameter number) starts to blink.

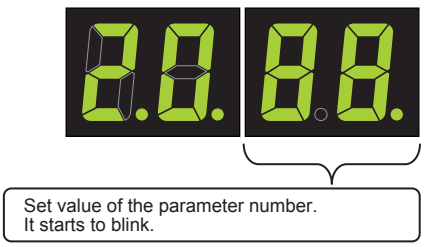

⑤ Select the input method of an external input with the key "UP" or "DOWN" setting.

Set value	External input function
00	External input function invalidity
01	Edge input
02	Pulse input

⑥ Push "SET" button.

When the "SET" button is pushed, all digits of 7 segment (monitor lamp) blinks once.

⑦ Push "MODE" button.

7 segment (monitor lamp) blinks only when there is a setting change. Afterward, it returns to the ordinary mode.

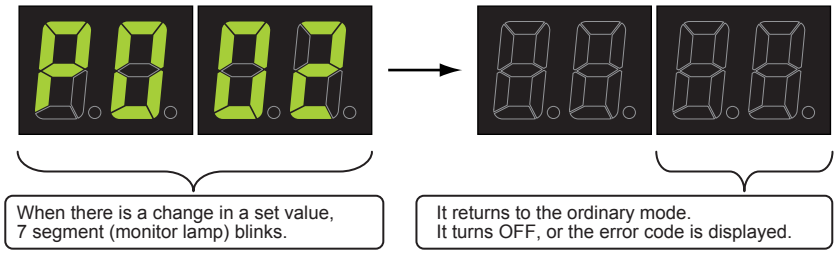

- The color of blinking LED is in red.

Refrigerant
R410A

AIRSTAGE™

J SERIES

3 . INVERTER CONTROL

3. INVERTER CONTROL

3-1 INVERTER CONTROL

3-1-1 WHAT IS INVERTER

"Inverter" is the word used against "Converter", and it is the equipment to change DC to AC.
Converter (Transformer) : To transform AC to DC (Rectifier)
Inverter (Reverse Transformer) : To transform DC to AC
As a generic term, the equipment that varies the output (Frequency or Voltage) is normally called as Inverter.

3-1-2 INVERTER BLOCK OF OUTDOOR UNIT

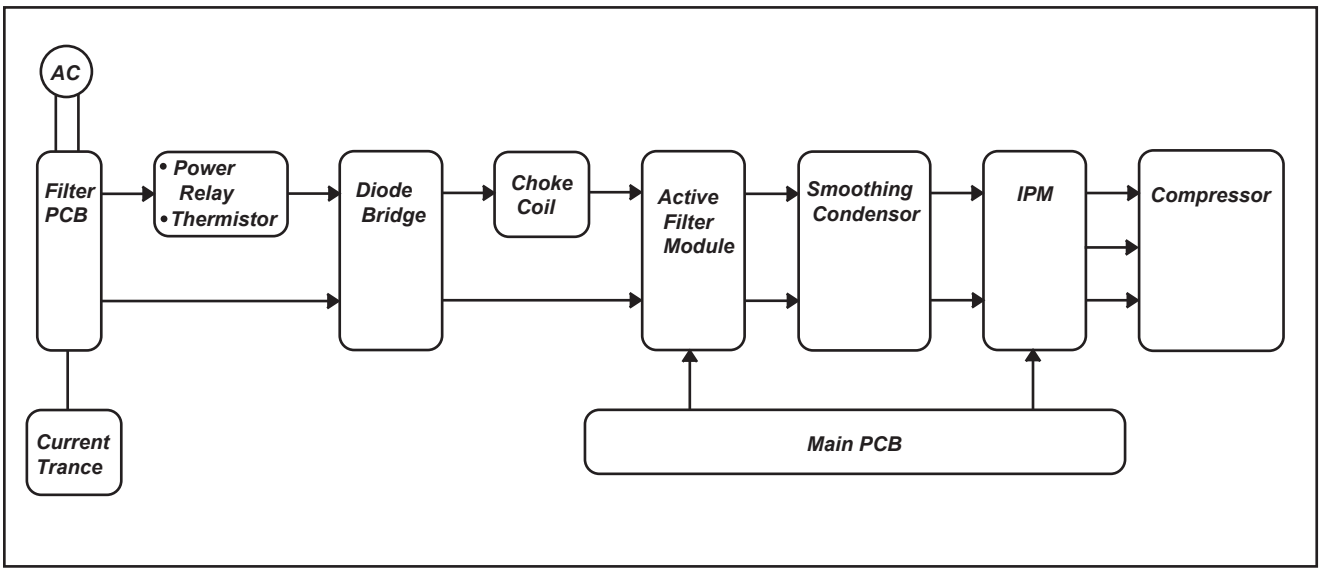

- VOLTAGE CONVERSION

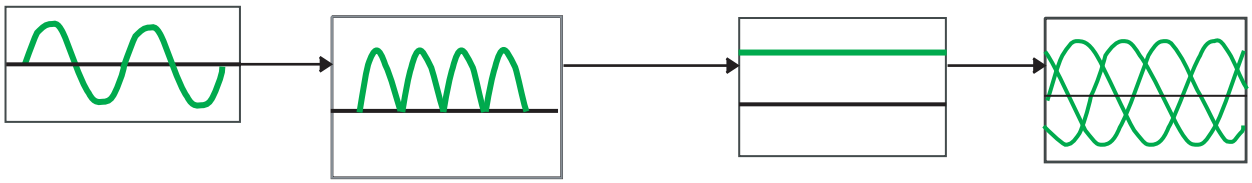

3-1-3 BASIC CIRCUIT OF 3 PHASE INVERTER

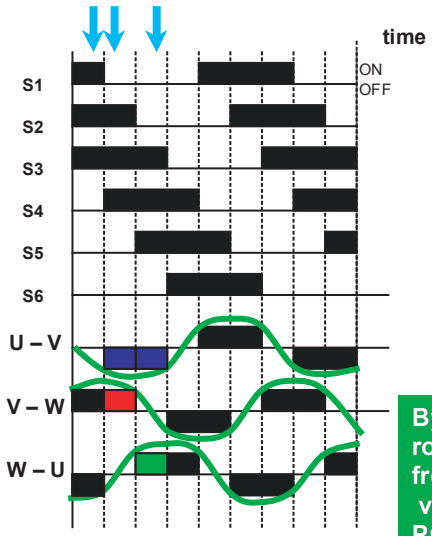

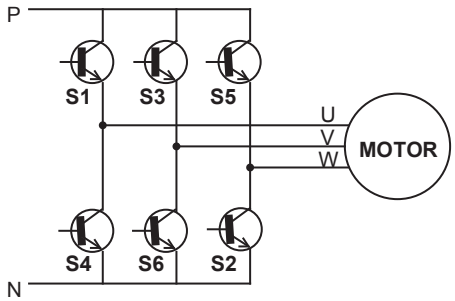

By changing the ON-OFF cycle of the switch, the rotation of the motor can be varied at the desired frequency. If the DC voltage is changed, the input voltage of the motor can be also varied. Practically, the motor is rotated by using 6pcs of transistors instead of a switch, and the transistor is alternately turned ON-OFF.

3-1-4 PWM CONTROL

AC Inverter

PWM Control System

The motor needs a sine wave input. The pulse width of the DC voltage from the converter is varied and cut out by the switching at the inverter as shown in the figure, and the motor rotation is controlled by the quasi-sine wave that is created by varying it to the desired average voltage.

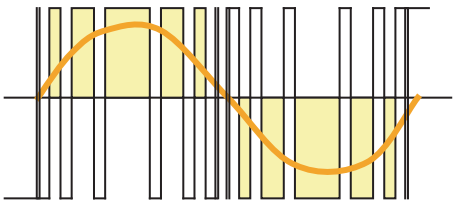

DC Inverter

PWM Control System

By using a brush less motor, the DC voltage pulse width from the converter is varied and cut out by the switching of the inverter, and the DC motor rotation is controlled by varying it to the desired average voltage It differs from AC compressor and the pulse becomes the equal interval waveform

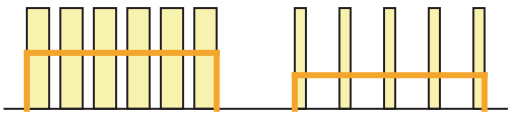

PAM Control System

By using a brush less motor, the motor rotation is controlled by applying a variable voltage of DC140V through 390V to the motor winding directly with the voltage booster which is composed of a reactor and a switching component.

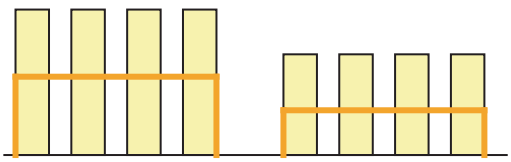

3-2 CIRCUIT DISCRIPTION

3-2-1 POWER SUPPLY CIRCUIT

Varistor

When an abnormal voltage is applied between the terminal of varistor (VA101), it shorts out and the circuit protection is carried out.

Surge Absorber

The surge absorber is a protection part as same as varistor for the electronic parts of outdoor unit against abnormal voltage such as lightening and it discharges the lightening surge.

Noise Filter

A lot of different kinds of pulse noise come out of inverter since it controls transistors by switching. Noise filter protects these noises to come out of inverter by absorbing the noise with the coil and bypassing the high harmonic frequency with capacitor.

Coil

It improves the primary side commercial power supply wave form (power factor) by removing the power supply harmonic frequency current and performs the insulation protection.

3-2-2 CURRENT DETECTION CIRCUIT

It is the circuit which always detects the input current. The compared value to 5 V standard voltage is input to the microcomputer and detects CT error so that the supplied current to the circuit does not exceed the set up value.

3-2-3 DIODE BRIDGE

It conducts the full-wave rectification of the AC voltage that passed through the power factor improvement filter.

3-2-4 THERMISTOR

It detects the temperature rise of Heatsink and prevents the electronic parts from a breakage by an excessive temperature rise.

3-2-5 CHOKE COIL

It conditions the current waveform and removes the noise.

3-2-6 ACTIVE FILTER MODULE

The input current is corrected by the microcomputer inside the module and the boosting chopper circuit, and the waveform with 100% of power factor is supplied to the output.
It improves the power factor, and controls the power supply harmonic wave current.

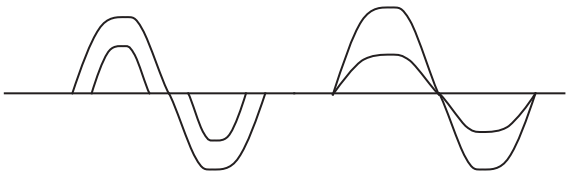

When compressor is stopped = Input Voltage x Root 2 (Effective Value)
When compressor is operated = 380V

The target DC voltage is set up by the input voltage and multiplied in comparison with the input DC voltage.

The multiplied target current and the input current are compared.

The compared value is compacted at with the waveform the oscillator at PWM comparator.

The compared signal controls the switching component ON and OFF.

3-2-7 SMOOTHING CONDENSOR

This is used to remove the ripple of DC voltage that is output from the active filter.

3-2-8 IPM (INTEGRATED POWER MODULE)

It is composed of 6 transistors and drives the motor by high speed switching.
The drive voltage signal is transferred to the drive circuit from microcomputer, and varies the supply frequency to the motor (PWM system) to rotate the motor.

3-2-9 DC MOTOR (DC INVERTER)

The rotor of DC compressor motor is made of permanent magnet, and it creates the revolving magnetic field by applying the voltage that is obtained by PAM control to the stator winding. And the pull and repulsion between the rotating magnetic field and the permanent magnet creates the force toward the same direction of the rotating magnetic field, and the rotor rotates.
The rotor and the permanent magnet need to be controlled to match up the revolving magnetic field to the polarity. In order to control the positioning detection, there are several types. One is the sensor type that built in the rectifier or Hall Effect Device, and the other type is the one that the positioning detection is done by the reverse power force which is excited at the stator winding by the rotation (Fleming s Right' Hand Rule).
The speed of the compressor can be changed by drifting the voltage (PAM control / PWM control).

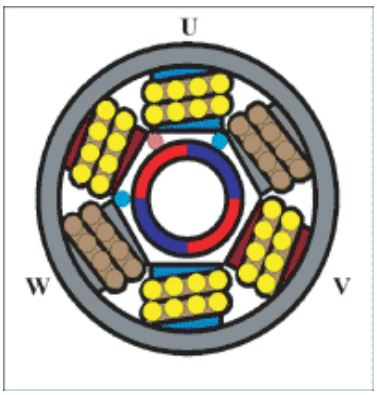

The rotor is made of permanent magnet.
No slipping is occurred and the efficiency is good.
When measuring the motor frequency by using a clamp meter, the indication is 2 time of actual rotation speed since it used 4 pole permanent magnet.

Refrigerant
R410A

AIRSTAGE™

J SERIES

4 . OUTDOOR UNIT OPERATION CONTROL

4. OUTDOOR UNIT OPERATION OPERATION CONTROL

4-1 OPERATION

4-1-1 INPUT / OUTPUT LIST

		Input / output parts or kind of detail	Control range
INPUT	Discharge temperature sensor 1	Thermistor	Measure range: 30 ～130°C
	Heat exchanger liquid temperature sensor 1※	Thermistor	Measure range: -30～70°C
	Heat exchanger temperature sensor (Middle)	Thermistor	Measure range: -30～70°C
	Suction gas temperature sensor	Thermistor	Measure range: -30～40°C
	Outdoor temperature sensor	Thermistor	Measure range: -30～60°C
	Operation current sensor	Current trans	
	IPM over current sensor	IPM with built in sensor	
	Serial signal	Transmission signal from indoor unit	
	DIP-SW input	Dip-switch Function	
	Pressure SW 1(Discharge)	Pressure switch	Pressure ≧ 609 ±15 psi (Protection) (4.2 ±0.1MPa)
	Pressure SW 2(Suction)	Pressure switch	Pressure ≦ 29 ±7 psi (Protection) (0.2 ±0.05MPa)
	External input 1	External input / RC priority	Non voltage contact
	External input 2	Setting of priority (Cooling/Heating)	Non voltage contact A twisted pair cable [22AWG, wire length ≦ 82ft. (25m)] should be used.
OUTPUT	Compressor (DC inverter)	Scroll compressor	20 ～ 100rps
	Fan motor(Hi / Lo / OFF)	Fan motor	AC 208～240V, 50/60Hz
	Expansion valve	EEV coil	Coil DC12V
	4-way valve 1 (Cooling or Heating)	Coil of 4-way valve	Coil AC 208～240V, 50/60Hz, 10W
	Solenoid valve 1	Hot gas bypass	Coil AC 208～240V, 50/60Hz, 10W
	Solenoid valve 2	Liquid injection bypass	Coil AC 208～240V, 50/60Hz, 10W
	External output terminal 1 (Operation)	ON / OFF	DC 0 /12V, Max.100mA
	External output terminal (Abnormal)	ON / OFF	DC 0 /12V, Max.100mA A twisted pair cable [22AWG, wire length ≦ 25m] should be used.
	Serial signal output	Transmission signal from outdoor unit	
	LED display	LED (1～6)	

4-1-2 OPERATION / STOP CONDITION

① Compressor operation condition

When cooling requirement capacity of the indoor units in the same refrigerant system is input, the compressor operates.
But in the following case, the compressor operates in accordance with operation of each mode.

- During 3 minute restart prevention operation
- During deicing operation
- Failure (except for a part)
- Defrosting
- Oil recovery
- Under expansion valve initialization
- At protective operation

② Compressor stop condition

When all the indoor units in no "cooling requirement capacity" , the compressor is stopped.
But, in the following case, the compressor operates in accordance with operation of each mode.

- Oil recovery
- Defrosting

4-2 COMPRESSOR OPERATION

4-2-1 CAPACITY CONTROL

・COOLING
The rotation speed of the compressor is decided basing on the sum of the required refrigerant amount from the connected indoor units.

・HEATING
The rotation speed of the compressor is decided by detecting the indoor heat exchanger mid temperature of the connected indoor units which is running on heating mode, so that the temperature reaches to the target temperature.
The compressor is controlled by PI control.
The one of the largest value of the signals from the indoor units on heating operation during the heat exchanger temperature detection is used to decide the rotation speed.
However, the rotation speed of the compressor at start-up is decided basing on the sum of the required refrigerant amount.

4-2-2 FREQUENCY CONTROL

・On stop mode 0Hz
・On operating mode 20Hz～100Hz
・Minimum running frequency 20Hz
・Correction
The correction of control frequency of the compressor is done by the following conditions.
* Outdoor Temperature
* Pipe Length Setting
* Capacity Shift Setting
* Protective Operation
Note that the protective correction has the most priority when the protection function is activated.
・Limit
Operation current limits as accordance with DIP-SW setting.
・Rotation speed hold
When the compressor starts up after stopping mode, the compressor speed is controlled within the certain period of time after starting it up so that it does not exceeds the desired speed and avoids the sudden drop of the compressor oil surface. (It holds the set up compressor speed.)
However, when the target speed drops when the speed is held, it releases holding the speed.

Hold 1 : 230 sec at 50Hz
Hold 2 : 550 sec at 70Hz

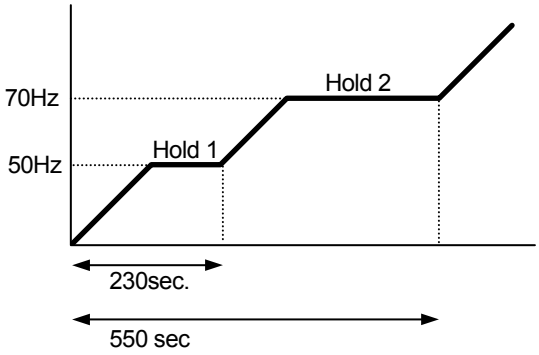

4-3 FAN CONTROL

4-3-1 COOLING OPERATION

The fan speed selection during the cooling operation is performed by the heat exchanger mid temperature value TH_{HMO}).

- When operating on cooling mode from the halt condition, it operates with "initial fan speed" or the fan speed memorized.
- When operating on cooling mode after the thermostat OFF, the fan speed of cooling operation just before entering a cooling operation stop is memorized, and operation is started at that fan speed.

FAN TABLE

	Fan speed normal	Fan speed silent operation mode	Intermittent output
Step 1	Hi	Lo	
Step 2	Lo	Lo	
Step 3	Intermittent 1		6.0 sec ON / 3.0 sec OFF
Step 4	Intermittent 2		6.0 sec ON / 6.0 sec OFF
Step 5	Intermittent 3		6.0 sec ON / 8.7 sec OFF
Step 6	Intermittent 4		3.5 sec ON / 7.4 sec OFF
Step 7	Intermittent 5		4.7 sec ON / 15.4 sec OFF
Step 8	OFF		—

Change of cooling mode fan speed

The fan motor speed of outdoor unit is controlled with the detection value of the heat sink middle temperature thermistor to be within the target control range as shown in the following figure.
When the detection value of the outdoor unit heat exchanger middle temperature thermistor becomes lower than $TH_{HMO\text{-}min}$, the fan speed is reduced one notch down from the current fan speed.
When the detection value of the outdoor unit heat exchanger middle temperature thermistor exceeds $TH_{HMO\text{-}max}$, the fan speed is increased one notch up from the current fan speed.
The maximum value of the target control value of the heat exchanger middle temperature, $TH_{HMO\text{-}max}$, is a constant value, and the minumum value, $TH_{HMO\text{-}min}$, changes based on the detection temperature of outdoor temperature thermistor. (Refer the values in the table below.)

Detection value of outdoor temperature thermistor TH_O (°C)	$TH_{HMO\text{-}min}$ (°C)	$TH_{HMO\text{-}max}$ (°C)
$TH_O < 20$	38	55
$20 \leqq TH_O < 40$	$0.35 \times TH_O + 31$	55
$40 \leqq TH_O$	45	55

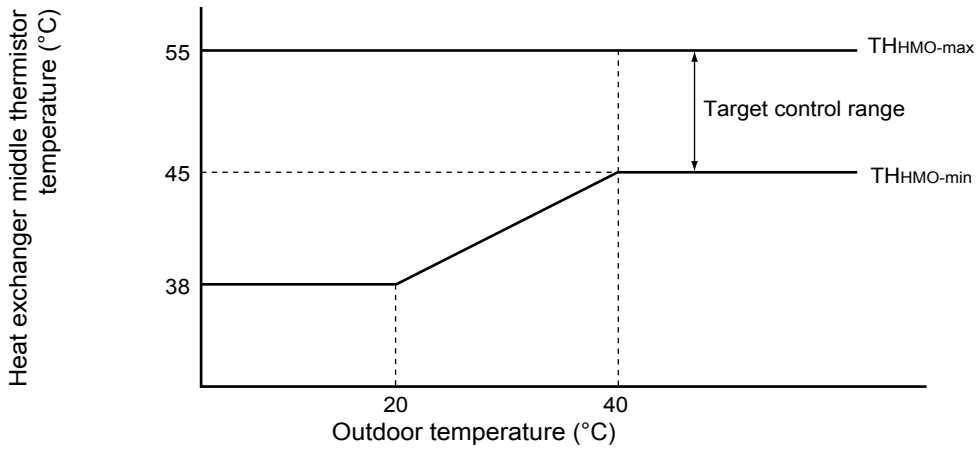

4-3-2 HEATING OPERATION

Heating operation is performed at Hi all the time.

4-4 EXPANSION VALVE CONTROL

(1) Initialization

- When power in turned on
- When the operation mode becomes off

(2) Number of pulse at the stop operation

500 pulses

(3) Operation Control

During the operation, the electronic expansion valve detects the discharge gas temperature value and is automatically controlled by the feed back control so that it is kept at the target value.
Control pulse range : 100 to 500 pulses
The targeted discharge temperature differs depending on the indoor operation capacity, compressor rotation speed and outdoor temperature.

4-5 4-WAY VALVE CONTROL

It selects either cooling or heating.

Stop : OFF
Cooling mode : OFF
Heating mode : ON

4-6 SPECIAL OPERATION

4-6-1 PRESSURE BALANCE CONTROL

The pressure balance operation is performed to balance the pressure inside the refrigerant circuit during from cooling to Heating or Stopping, or from Heating to Cooling or Stopping.
It keeps open SV1 and SV2 for 3 minutes.

4-6-2 OIL RECOVERY OPERATION

1) Purpose of the operation

The amount of refrigerant lubricant oil which has been transported to the indoor units and the connection pipe with the refrigerant will become large as the operation time of compressor increase. It is necessary to recover the oil back into the outdoor unit for a certain time interval in order to prevent compressors from damaging due to lack of lubrication oil.

2) About the oil recovery operation

When "oil recovery integrated time", which is the integrated operating time of compressor in operation, reaches to the certain time, the oil recovery operation starts.

The "oil recovery integrated time" to start the oil recovery is as follows.

- The first time of oil recovery after the power is turned on : 1 hour
- The second time and afterwards : At intervals of 3 hours (cooling mode)
  : At intervals of 12 hours (Heating mode)

3) Forced Oil Recovery

The oil recovery operation can be performed by setting the forced oil recovery DIP from OFF to ON (ON to OFF) and keeping it at position for more than 10 seconds.
This DIP SW operates from either side. (From OFF to ON, or from ON to OFF)
Therefore, when the forced oil recovery is performed with DIP SW, it is not necessary to release DIP SW upon completion of the oil recovery.

4) Compressor Operation

Oil recovery operation time : 210 seconds
When it goes into oil recovery operation out of cooling operation, a compressor does not stop but it goes into oil recovery operation as it is. Upon completion of oil recovery operation, the compressor once stops and shifts to the normal operation.

Compressor function frequency : 50Hz (Note it fluctuates by the protection control).

- FAN : Fan speed is decided by the outdoor temperature and the heat exchanger mid temperature.

5) Others

During the oil recovery operation, appears on the display of wired remote controller, and appears on the simple remote controller.
The operation indicators (LED) of the indoor units flash slowly.

4-6-3 DEFROSTING OPERATION

1) Purpose of operation

By removing the frost that was formed on the surface of the outdoor unit heat exchanger, the defrosting operation prevents a decline in heat transfer efficiency and realizes an efficient heating operation.

2) About the defrosting operation

(a) Starting condition of the defrosting operation

The defrosting operation starts when all the following conditions are satisfied.

- Outdoor unit operation mode is "heating".
- Integrated time which any of the compressors is operating has reached 40 minutes or longer.
- The temperature of any outlet of heat exchanger in operation has become less than -10℃.

(b) End condition of the defrosting operation

When any of the following conditions is satisfied, defrosting operation ends.

- The temperature of the heat exchanger in operation exceeds a temperature.(10℃)
- 10 minutes or longer have elapsed since defrosting started.
- When the operation mode is changed from heating to cooling.

3) Others

During the defrosting operation the fans of indoor units stop, appears on the display of wired and central remote controller, and appears on the simple remote controller.
The operation indicators (LED) of the indoor units flash slowly.

4-6-4 CRANK CASE HEATER OPERATION

The crank case heater keeps the compressor temperature at or higher than the ambient temperature while stopping, and it protect the compressor from starting up failure due to the refrigerant being stayed inside the compressor.

Starting condition :

- When the detection temperature of the heat exchanger middle temperature thermistor becomes lower than 38°C after 3 minutes of turning on the power (Compressor has not started up after the power on).
- When the detection temperature of the heat exchanger middle temperature thermistor becomes lower than 38°C at longer than 30 minutes after stopping compressor upon operation.

Releasing condition :

- When the detection temperature of the heat exchanger middle temperature thermistor becomes higher than 42°C.
- When the compressor is turned ON.

4-7 PROTECTIVE FUNCTION

4-7-1 PROTECTIVE FUNCTION LIST

Protective Function List

	Protective Function	Detect Parts	Condition of Protection Detective	Function
1	Discharge temp protection 1	Discharge temp thermistor	Start: 108°C more. Release: 100°C less (120sec)	Compressor speed is decreased by 10Hz/120 sec until it becomes lower than 108°C.
2	Discharge temp protection 2	Discharge temp thermistor	Start: 103°C more. Release: 88°C less (120sec)	SV2 is opened.
3	Discharge temp protection 3	Discharge temp thermistor	Start: 118°C more. Release: 93°C less (10min)	Compressor stops. Discharge temperature error by 3 times with in 40 min.
4	Cooling overload protection 1	Heat exchanger mid thermistor	Start: 59°C more. Release: 52°C less (120sec)	Compressor speed is decreased by 10Hz/120 sec until it becomes lower than 59°C.
5	Cooling overload protection 2	Heat exchanger mid thermistor	Start: 61°C more. Release: 52°C less (120sec)	SV1 is opened.
6	Heating overload protection 1	Heat exchanger mid thermistor (Indoor unit) Maximum value	Start: 56°C more. Release: 47°C less (120sec)	Compressor speed is decreased by 10Hz/120 sec until it becomes lower than 47°C.
7	Heating overload protection 2	Heat exchanger mid thermistor (Indoor unit) Maximum value	Start: 57°C more. Release: 47°C less (120sec)	SV1 is opened.
8	High pressure protection	Pressure switch 1	Start: Pressure SW OFF [609psi (4.2MPa) more] Release: Pressure SW ON [464psi (3.2MPa)]	Compressor stopes. High pressure error by 2 times with in 20 min.
9	Low pressure protection 1	Pressure switch 2	Start: Pressure SW OFF 10 minutes. 20 min after compressor started up Release: Pressure SW ON 3 minutes comp stop	Compressor stops. Low pressure error by 2 times with in 40 min.
10	Low pressure protection 2	Pressure switch 2	Start: Pressure SW OFF A compressor starts for the first time and it is less than 1 minute. Release: Pressure SW ON 3 minutes comp stop	Compressor stops. Low pressure error by 5 times with in 30 min.
11	Active filter detected protection	Element in active filter	Start: Detected open Release: Release open detection	Compressor stops.
12	Active filter over voltage protection	Element in active filter	Start: Detected excessive voltage Release: Release excessive voltage detection	Compressor stops.
13	Current release protection	Detect circuit in PCB	Start: Setting current limit value※1 Release: Setting current limit value-1A	Compressor speed is decreased by 1Hz / 2 sec until it becomes to the release current value.
14	IPM over current	Element in IPM	Start: Detected current 61.4～83.8A Release: Release by compressor stop	Compressor stops. Abnormal stop by detecting 5 times within 40 sec after start-up.

※1 Depends on DIP-SW setting.

Refrigerant
R410A

AIRSTAGE™

J SERIES

5 . INDOOR UNIT OPERATION CONTROL

5. INDOOR UNIT OPERATION CONTROL

5-1 FAN CONTROL

5-1-1 FAN SPEED SETTING

Fan speed setting

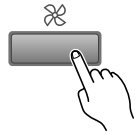

Press the FAN CONTROL button to set the fan speed.

5-1-2 "AUTO" POSITION

1) COOLING OPERATION

The fan speed is determined automatically in accordance with the condition "(T_R(corrected room temperature) - T_S (corrected set temperature)" as shown on the right. However, the fan speed zone is determined in the manner as the room temperature increases for the following cases.

(1) When the T_S is changed.
(2) When the operation mode is changed from other mode to "COOL".
(3) When the fan control is changed from other position to "AUTO".

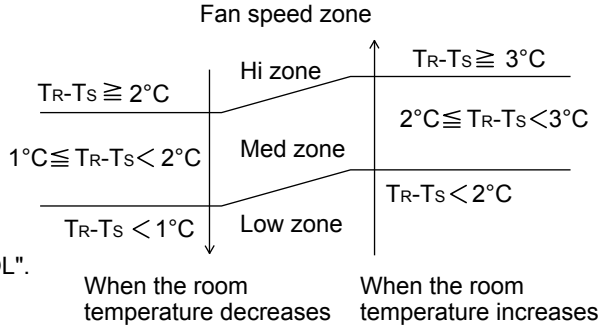

2) HEATING OPERATION

(1) When the indoor heat exchanger temperature reaches 47℃ or more, the fan speed switches to the next higher position. ("LOW" --> "MED", "MED" --> "HIGH").
(2) When the indoor heat exchanger temperature drops below 41℃ while the refrigerant circulation of the indoor unit is ON, the fan speed switches to the next lower position ("HIGH" --> "MED", "MED" --> "LOW").
(3) After switching the fan speed, it does not switch again within 2 minutes.
(4) When "FAN CONTROL" is switched from a set fan speed to "AUTO" after the cold air prevention is released , the fan of indoor unit will start at "MED" speed for T_{HE} ≧ 41℃ or at "LOW" speed for T_{HE} ＜ 41℃.

An example for heat operation

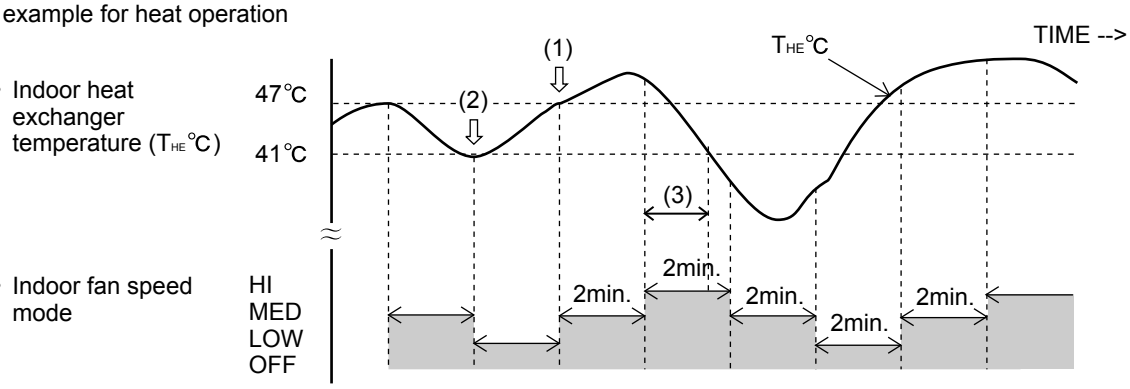

3) DRY OPERATION

The indoor fan always rotates at "Lo" speed.

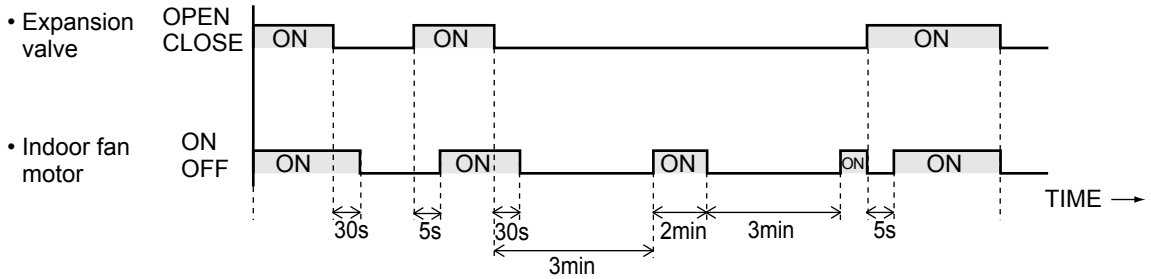

(1) The indoor fan starts operation 5 seconds after the electric expansion valve opens. However, when the indoor unit just starts its operation or the operation mode is changed from other to "DRY" and the refrigerant circulation is not stopped, the fan will rotate immediately without a delay time of 5 seconds.
(2) The indoor fan will stop in 30 seconds when the refrigerant circulation stops.
(3) The indoor fan will stop immediately when the indoor unit is stopped by pushing the stop button or by a setting of ON timer.
(4) When the refrigerant circulation is stopped due to a lower room temperature for more then 3 minutes, the fan will rotate 2 minutes at intervals of 3 minutes.
(5) When the indoor unit just starts its operation or the operation mode is changed from other to "DRY" and the refrigerant circulation is stopped, the fan will rotate for 1 minute and then it will operate according to the statement (4).

5-2 MASTER CONTROL

5-2-1 OPERATION MODE CONTROL

Each operation mode is controlled as below.

(1) Stop mode

Indoor fan motor : OFF
Electric expansion valve : Stop pulse
Drain pump : Turns ON-OFF by the drain pump control function

(2) Cool, Fan, Heat and Dry Mode

	Cool	Fan	Heat	Dry
Indoor fan motor	Operates according to the AIR FLOW-MODE setting, and besides frost prevention operation	Operates according to the AIR FLOW-MODE setting.	Operates according to the AIR FLOW-MODE setting, and besides • Cold air prevention • Defrost operation	See the fan control page.
Drain pump	Turns ON-OFF by the drain pump control function			
Electrical expansion valve	Pulse controlled by the temperature difference calculation and frost prevent fuction	Stop pulse	Pulse controlled by the temperature difference caculation and the defrosting function	Pulse controlled by the temperature difference calculation and frost prevent function

5-2-2 AUTO CHANGEOVER

■ AUTO CHANGEOVER operation (COOLING ONLY TYPE)

Operation flow chart

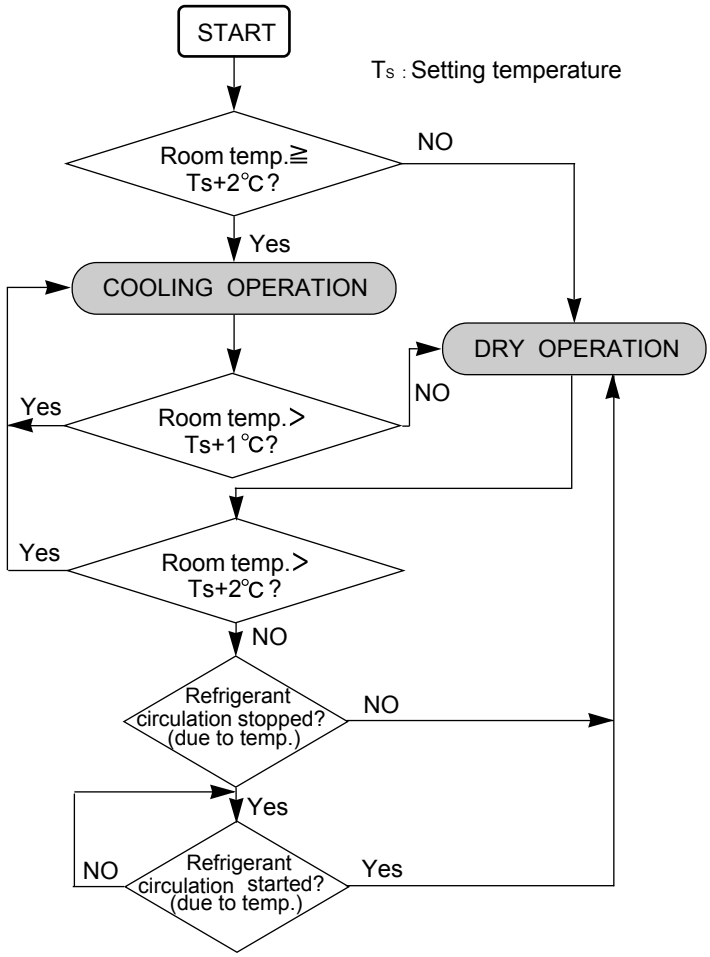

(1) When the indoor unit starts the operation at “AUTO" or it is switched to “AUTO” from other modes, if the room temperature is higher than the set temperature + 2℃ (Room temp. ≧ Set temp.(Ts) + 2℃), "COOL" operation will start automatically.

(2) When the room temperature decreases under the set temp. (Ts) + 1℃ during the "COOL" operation, the indoor unit will switch to "DRY" operation automatically.

(3) When the room temperature increases up to the set temp. (Ts) + 2℃ during the "DRY" operation, the indoor unit will switch to "COOL" operation automatically.

(4) When the indoor unit starts the operation at “AUTO" or it is switched to “AUTO” from other modes, if the room temperature is lower than the set temperature + 2℃ (Room temp. < Set temp.(Ts) + 2℃), "DRY" operation will start automatically.

The cases of (1) and (4)

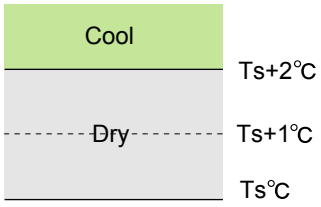

The cases of (2) and (3)

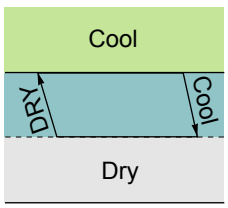

5-2-3 "COOL" POSITION

When using the cooling mode, set the temperature to a value lower than the current room temperature, otherwise the indoor unit will not start the cooling operation and only the fan will rotate.

An example for COOLING TEMPERATURE CONTROL time chart (Manual setting)

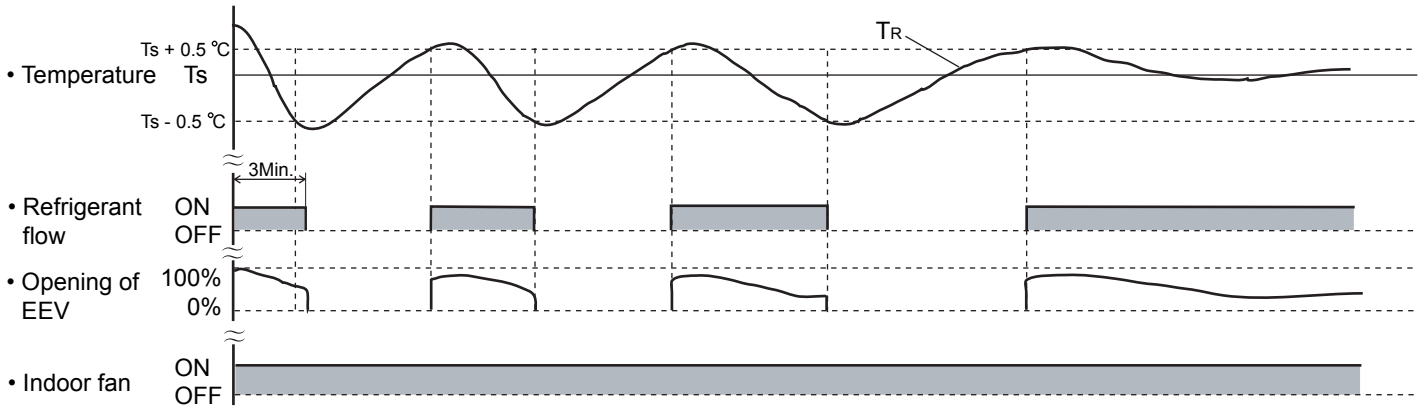

Ts : Corrected setting temperature
TR : Corrected room temperature
Ts + 0.5 ℃: The thres hold temperature of start of refrigrant flow
Ts - 0.5 ℃ : The thres hold temperature of stop of refrigrant flow

5-2-4 "HEAT" POSITION

(1) When using the heating mode, set the temperature to a value higher than the current room temperature, otherwise the indoor unit will not start the heating operation.
(2) After the start of heating operation, the fan of indoor unit will not rotate until the heater exchange is warmed up to blow out warm air.
(3) During defrosting, the OPERATION indicator lamp flashes 3 sec. ON and 1 sec. OFF, and repeat. The heating operation will be temporarily interrupted.

An example for HEATING TEMPERATURE CONTROL time chart (Manual setting)

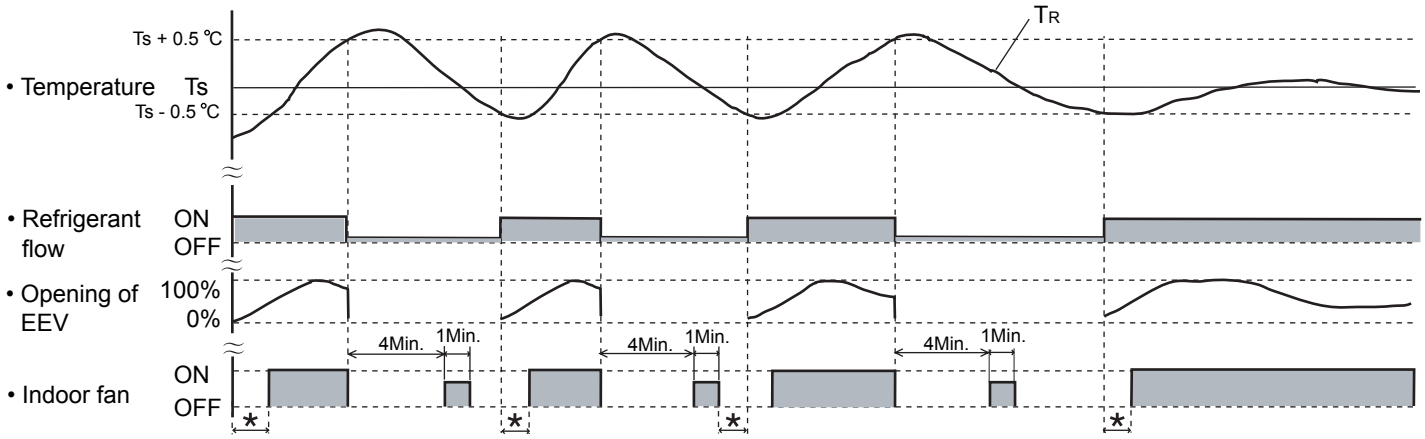

Ts : Corrected setting temperature
TR : Corrected room temperature
* : Duration of cold air prevention
Ts + 0.5 ℃: The thres hold temperature of start of refrigrant flow
Ts - 0.5 ℃ : The thres hold temperature of stop of refrigrant flow

5-2-5 "FAN" POSITION

(1) In this position, the fan merely rotates to circulate air, so the room temperature will not change.
(2) The fan will rotate at a fan speed set with the FAN CONTROL button.
(3) When only the “FAN” mode is being used, setting the fan speed at “AUTO” is equivalent to setting it at “MED”.

5-3 LOUVER CONTROL

5-3-1 ADJUSTING THE DIRECTION OF AIR CIRCULATION

Instructions relating to heating (∗) are applicable only to heat pump type outdoor unit.

Begin air conditioner operation before performing this procedure.

Vertical Air Direction Adjustment

This instructions are applicable to "CASSETTE TYPE", "WALL MOUNTED TYPE" and "COMPACT WALL TYPE".

Press the VERTICAL AIR FLOW DIRECTION SET button.
Each time the button is pressed, the air direction range will change as follows:

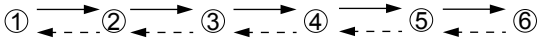

For compact wall mounted type indoor units operating under cooling mode.

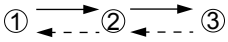

The remote controller's display does not change.

■ **CASSETTE TYPE**

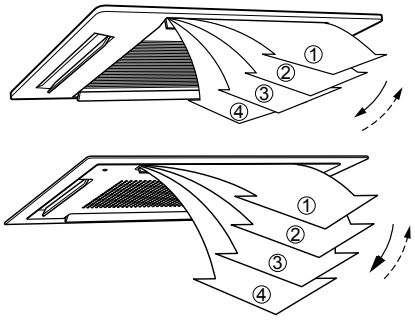

■ **WALL MOUNTED TYPE**

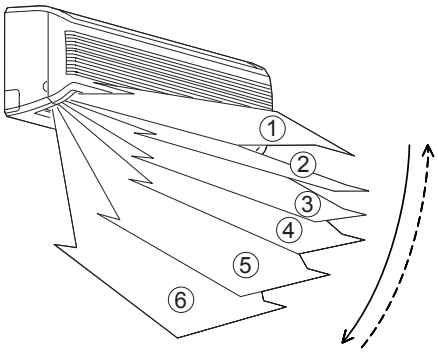

■ **COMPACT WALL MOUNTED TYPE**

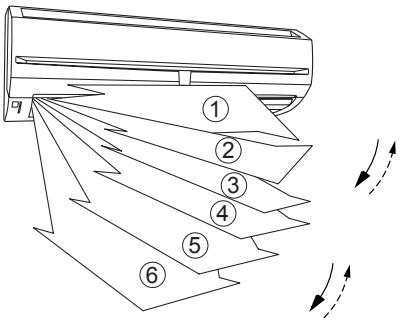

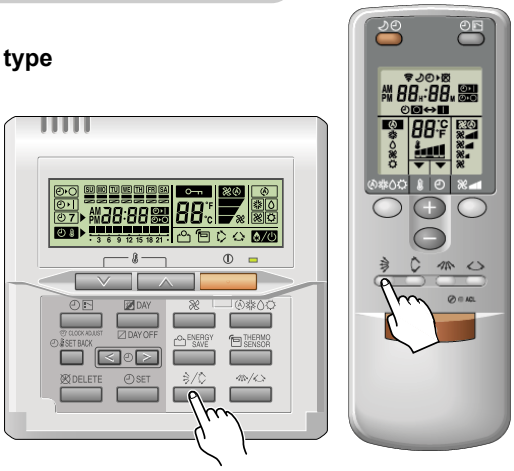

Example : When set to vertical air direction.

⚠ DANGER!

Never place fingers or foreign objects inside the outlet ports, since the internal fan opertes at high speed and could cause personal injury.

- Always use the remote control umit's AIR FLOW DIRECTION button to adjust the UP/DOWN air direction flaps or RIGHT/LEFT air direction louvers. Attempting to move them manually could result in improper operation; in this case, stop operation and restart. The louvers should begin to operate properly again.
- During use of the Cooling and Dry modes, do not set the UP/DOWN air direction flaps in the position of ④⑤⑥ for long periods of time, since water vapor may condense near the outlet port and drops of water may drip from the air conditioner.
- When used in a room with infants, children, elderly or sick persons, the air direction and room temperature should be considered carefully when making settings.

- Use the air direction adjustments within the ranges shown above.
- The vertical airflow direction is set automatically as shown, in accordance with the type of operation selected.
  During Cooling mode : Horizontal flow ①
  ∗ During Heating mode : Downward flow ④ or ⑥
- During AUTO mode operation, for the first minute after beginning operation, airflow will be horizontal ①, the air direction cannot be adjusted during this period.

(2) Horizontal Air Direction Adjustment

This instructions are applicable to "LARGE CEILING TYPE", "UNIVERSAL FLOOR/CEILING TYPE", "WALL MOUNTED TYPE" and "CEILING WALL TYPE".

Press the HORIZONTAL AIR FLOW DIRECTION SET button.
Each time the button is pressed, the air direction range will change as follows:

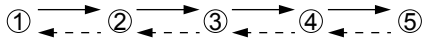

The remote controller's display does not change.

Example : When set to horizontal air direction.

■ **WALL MOUNTED TYPE**

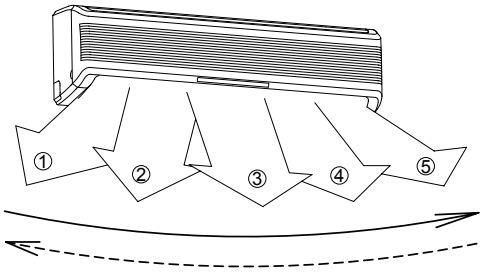

5-3-2 SWING OPERATION

Instructions relating to "the indoor unit's indicator lamp" (∗∗) are applicable to "CASSETTE TYPE", "WALL MOUNTED TYPE" and "COMPACT WALL MOUNTED TYPE".

Begin air conditioner operation before performing this procedure.

To select Vertical airflow SWING Operation

This instructions are applicable to "CASSETTE TYPE", "WALL MOUNTED TYPE" and "COMPACT WALL MOUNTED TYPE".

Press the VERTICAL SWING button for more than two seconds.
The remote controller's VERTICAL SWING lamp (orange) **and indoor unit's SWING indicator lamp (VERTICAL SWING) (orange) will light up.
In this mode, the UP/DOWN air direction flaps will swing automatically to direct the air flow both up and down.

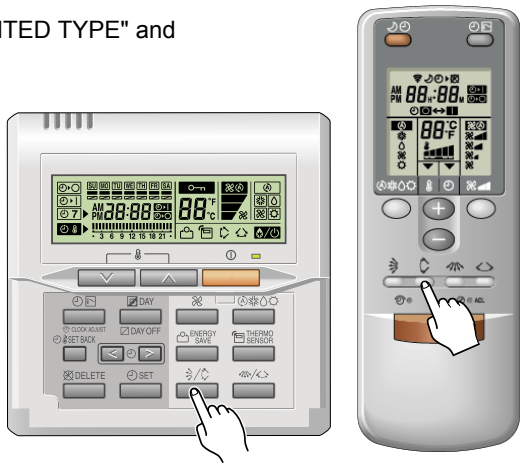

Example : When set to vertical swing.

To Stop Vertical airflow SWING Operation

Press the VERTICAL SWING button for more than two seconds once and again.

The remote controller's VERTICAL SWING lamp **and indoor unit's SWING indicator lamp (VERTICAL SWING) will go out. Airflow direction will return to the setting before swing was begun.

Instructions relating to "the indoor unit's indicator lamp" (**) are applicable to "CASSETTE TYPE", "WALL MOUNTED TYPE" and "COMPACT WALL MOUNTED TYPE".

About Vertical Airflow SWING Operation

- The range of swing is relative to the currently set airflow direction.
- If the swing range is not as desired, use the remote controller's VERTICAL AIR FLOW DIRECTION SET button to change the range of swing.
- The SWING operation may stop temporarily when the air conditioner's fan is not operating, or when operating at very low speeds.

To select Horizontal Airflow SWING Operation

This instructions are applicable to "WALL MOUNTED TYPE".

Press the HORIZONTAL SWING button for more than two seconds.

The remote controller's HORIZONTAL SWING lamp (orange) **and indoor unit's SWING indicator lamp (HORIZONTAL SWING) (orange) will light up.
In this mode, the RIGHT/LEFT air direction louvers will swing automatically to direct the airflow both right and left.

To stop Horizontal airflow SWING Operation

Press the HORIZONTAL SWING button for more than two seconds once and again.

The remote controller's HORIZONTAL SWING lamp **and indoor unit's SWING indicator lamp (HORIZONTAL SWING) will go out. Airflow direction will return to the setting before swing was begun.

About Horizontal Airflow Swing Operation

- The range of swing is relative to the currently set airflow direc tion.
- If the swing range is not as desired, use the remote controller's HORIZONTAL AIR FLOW DIRECTION SET button to change the range of swing.
- The SWING operation may stop temporarily when the air conditioner's fan is not operating, or when operating at very low speed.

Air swing range (Cassete type)

Air flow direction set	Range of swing
①	① to ③
②	② to ④
③	② to ④
④	① to ④ (All range)

Air swing range (Wall mounted type)

Air flow direction set	Range of swing
①	① to ④
②	① to ④
③	① to ④
④	③ to ⑤
⑤	④ to ⑥
⑥	① to ⑥ (All range)

Air swing range (Compact wall mounted type)

Air flow direction set	Range of swing
①	① to ③
②	① to ③
③	① to ③
④	④ to ⑥
⑤	④ to ⑥
⑥	④ to ⑥

Range of swing ④ to ⑥ only for heating mode.

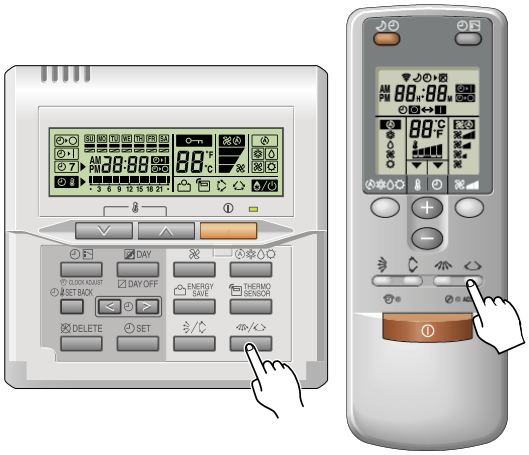

Example : When set to horizontal swing.

Air flow direction set	Range of swing
①	① to ⑤ (All range)
②	① to ③
③	② to ④
④	③ to ⑤
⑤	① to ⑤ (All range)

Air direction range

5-4 ELECTRONIC EXPANSION VALVE CONTROL

(1) Initialization

- When the power is turned ON.
- When the power is OFF after the certain period.

(2) Operation Control

- When indoor unit stopping

Outdoor unit Condition	EEV Condition
OFF	Fully closed
Cooling	Fully closed
Heating	Slightly open

- When starting up

(Cooling) Move to the cooling control base pulse.
(Heating) Move to the heating control base pulse in steps.

- Automatic operatin control

Automatic PI control is performed based on the indoor unit heat exchanger mid temp and inlet temp.

- Room temperature control

The refrigerant flow is controlled in the increments of 0.5℃, so that the indoor temperature is smoothly controlled based on the difference between the indoor temperature and the setting temperature, and the indoor temperature curve.

(3) Special Control

- Defrosting (at the oil recovery operation)
  The similar pulse value of the cooling control pulse.

- At Pump-down
  Fully open

5-5 DRAIN PUMP OPERATION

(1) When cooling and refrigerant circulation starts, the drain pump starts simultaneously.
(2) The drain pump operates continuously for 3 minutes after the refrigerant circulation stopped.
(3) When the refrigent circulation is stopped by a start of indoor heat exchanger frost provention operation, the drain pump will turn off in 1 hour after the end of indoor heat exchanger frost provention operation.
(4) When the water level in the drain pan rises up and then the float switch functions:
① Microcomputer stops the refrigerant circulation and indoor fan motor operation.
② Drain pump operates continuously for 3 minutes after the float switch is turned off.
(Almost condensing water may be drained)
(5) When the float switch turns ON continuously for 3 minutes, 'FAILURE INDICATION' operates.
(6) When the float switch turns OFF within 3 minutes, the unit starts cooling operation.

5-6 FUNCTION

5-6-1 AUTO RESTART

When the power supply to the indoor unit shut down and comes back again, the indoor unit is operated at the previous condition before the shut down.
It DIP-SW 2-4 of the indoor unit is OFF, auto restart does not function.

5-6-2 ICING PROTECTION CONTROL

The icing of the indoor heat exchanger is prevented during the cooling and dry mode operation.

(1) Starting Condition
- Comperessor is operation more than 3 minutes.
  When "Heat exchanger inlet temperature ≦ T_A" continues 10 minutes or more.
- Comperessor is operation more than 3 minutes.
  When "Heat exchanger middle temperature ≦ T_A" continues 4 minutes or more.

(2) Operation
EEV is closed.
Fan is at the setting amount.

(3) Completing Condition
Heat exchanger inket and middle temperature ≧ T_B
After more than 5 minutes

* Drain pump turns off at 60 minutes past the completion of the icing protection operation.

T_A	T_B
1°C	7°C

5-6-3 COLD AIR BLOWING PROTECTION CONTROL

During the heating operation, the cold air blowing is protected.
The indoor fan operation is limited at the starting the heating mode when the heat exchanger middle temperature is higher than 27°C.

5-6-4 DEFROSTING OPERATION, OIL RECOVERY OPERATION

[Defrosting Operation] : It prevents the heating capacity decrease due to the adhered ice on the outdoor heat exchanger.

[Oil Recovery Operation] : It periodically returns the residual refrigerantion oil in the indoor unit and the connection piping back to the outdoor unit, and prevents the compressor oil level from decreasing.

Indoor Unit LED : Operation LED

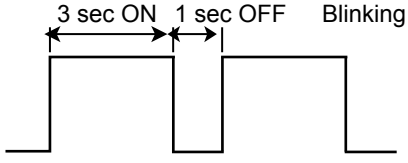

Indoor Fan : Stop

Indoor EEV : Control pulse

* During the above operation, a refrigerant noise may be heard from the indoor unit.

5-7 TIMER CONTROL

5-7-1 WIRELESS REMOTE CONTROLLER

UTB - ∗ VB

There are following 4 kinds of timer modes are available.

- ON Timer :
- OFF Timer :
- PROGRAM Timer :
- SLEEP Timer :
- Timer reset :

1. ON / OFF TIMER

Instructions relating to heating are applicable to "HEAT PUMP MODELS".
The timer functions cannot be used when this controller is used together with the remote controller (Wired type).
A beeping sound is made when a signal is received.

To set the ON / OFF timer

Press the START/ STOP button to start the air conditioner, and then proceed as follows.

1 **Select "OFF TIMER" or "ON TIMER"**

RESET → OFF TIMER → ON TIMER
PROGRAM TIMER (OFF ← ON, OFF → ON)

2 **Adjust the OFF or ON time.**
(About 5 seconds later , the entire display will reappear.)

2. PROGRAM TIMER

To set the PROGRAM timer

Press the START/ STOP button to start the air conditioner, and then proceed as follows.

1 **Select "OFF TIMER"**

2 **Adjust the OFF time.**

3 **Select "ON TIMER"**

4 **Adjust the ON time.**
(About 5 seconds later, the entire display. will reappear.)

5 **Select "PROGRAM TIMER"**
(Either OFF ON or OFF ON will display.)
(If the ON timer has been selected to operate first, the unit will stop operating at this point.)

To cancel the TIMER

Select "TIMER RESET".
The air conditioner will return to normal operation.

To change operating conditions

If you wish to change the operating conditions (ON/OFF,Mode, Fan Speed, Temperature Setting), after making the time setting, wait until the entire display reappears, then press the appropriate buttons to change to the desired operating condition.

3. SLEEP TIMER

To set the SLEEP timer

The SLEEP timer can be set regardless of whether the indoor unit is operating or stopped.

1 (Both the indoor unit's OPERATION indicator lamp (red) and the TIMER indicator lamp (green) will light.)

2 **Adjust the OFF time.**
(About 5 seconds later,the entire display will reappear.)

To change the timer settings

1

2
The OFF time is displayed when the "▼" mark is flashing.

To cancel the TIMER

Select "TIMER RESET".
The air conditioner will return to normal operation.

To stop air conditioner operation during timer operating

Sleep timer

The sleep timer function automatically corrects the temperature thermostat setting according to the time setting to prevent excessive cooling and heating while sieeping.

Cooling operation / dry operation

When the sleep timer is set, the set temperature automatically rises 1 °C every hour.The set temperature can rise up to a maximum of 2 °C

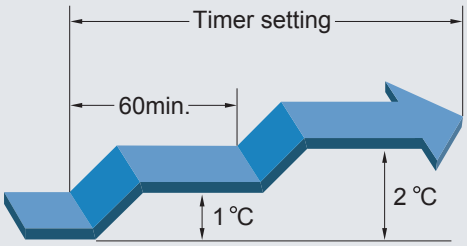

Heating operation

When the sleep timer is set, the set temperature sutomatically drops 1 ℃ every 30 minutes. The set temperature can drop to a maximum of 4 ℃

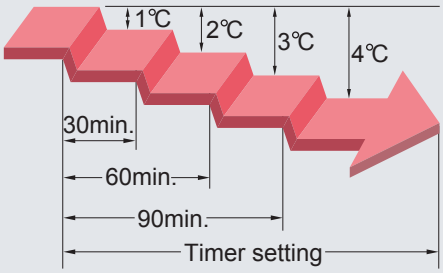

5-7-2 WIRED REMOTE CONTROLLER

UTB - ✻ UB

- ON / TIMER
- OFF / TIMER
- WEEKLY TIMER
- TEMPERATURE SET BACK TIMER

1. ON / OFF TIMER

Instructions related to heating are applicable to "HEAT PUMP MODELS".
The timer function may not be available because of initial setting.

To set the ON / OFF timer

1 Press the TIMER MODE button to select the ON TIMER or OFF TIMER.

No display → OFF TIMER → ON TIMER → WEEKLY TIMER (NON STOP)

2 From 1 to 24 hours

ex.OFF timer set for 6 hours

Press the SET TIME buttons to set time.
After the time is set, the timer will start automatically.
The amount of time until the OFF timer operates that is displayed on the timerdisplay decreasesas time passes.

To cancel the timer mode

- Press the DELETE button to cansel the timer mode.
- The timer mode can also be canceled by changing the timer mode using the TIMER MODE botton.

2. WEEKLY TIMER

Instructions related to heating are applicable to "HEAT PUMP MODELS".
The timer function may not be available because of initial setting.

To set the WEEKLY timer

1 Press the TIMER MODE button to select the weekly timer.

2 Press the SET button for 2 seconds or more.

3 **Day of the week setting**

*ALL → SU → MO → TU → WE → TH → FR → SA

Press the DAY button to select the day of the week, and then press the SET button to confirm the setting.
* For ALL, all of the days can be set together when a ▭ appears around each day.

4 **Time setting**

ON-1 → OFF-1 → ON-2 → OFF-2

When the operating time is set, the ▬ mark appears.

ex. The timer is set for 7:00-18:00.

Press the SET TIME buttons to set the ON time in 30-minute increments, then press the SET button to proceed to the OFF time setting. Set the OFF time in the same way. If necessary, set the second weekly timer settings in the same way.

5 Repeat steps **3** and **4** to set the weekly timer for another day of the week.

6 Press the SET button for 2 seconds or more to complete the weekly timer settings.

To delete the operating time

If the DELETE button is pressed during steps **3** or **4**, the operating time for the selected day will be deleted.
If all the days are selected, the operating times for all of the days will be deleted.

To start/cancel the WEEKLY timer operation

To start

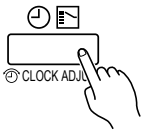

When the weekly timer is selected, the timer starts automatically.

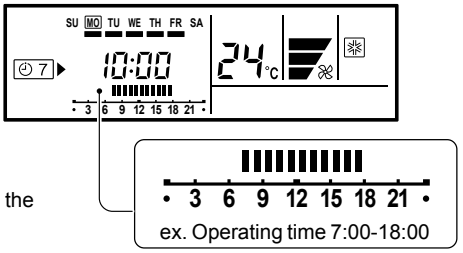

The operating time for the current day is displayed.

To cancel

- Press the DELETE button to cancel the timer mode.
- The timer mode can also be canceled by changing the timer mode using the TIMER MODE button.

NOTES

(1) PRECAUTIONS DURING WEEKLY TIMER SET UP
Setup is not possible in the following cases, so amend the time.
- Be sure to set the ON time first, then the OFF time. If either the ON time or the OFF time is not set correctly, the timer will not operate properly.
- The WEEKLY 2 settings cannot be set earlier than the WEEKLY 1 settings.
- The WEEKLY 1 and WEEKLY 2 time spans cannot overlap.

(2) The earliest OFF time you can set is 30 minutes after the ON time.
(3) The OFF time can be carried over to the next day.
(4) Even if the timer operation is set, the timer indicator lamp of the indoor unit does not light up. (The timer indicator lamp is used for wireless remote controllers only.)

To set the DAY OFF (for a holiday)

1

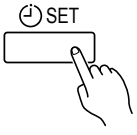

During the weekly timer , press the SET button for 2 seconds or more to set the day.

2

Select the day to set the DAY OFF.

3

Press the DAY(DAY OFF) button for 2 seconds or more to set the DAY OFF.

4

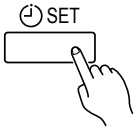

Press the SET button for 2 seconds or more to complete the DAY OFF setting.

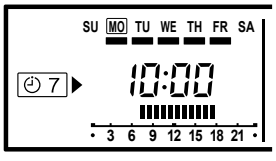

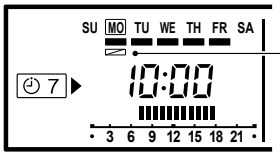

mark: Indicates the DAY OFF.

ex. The DAY OFF is set for Monday.

To cancel

Follow the same procedures as those for setup.

NOTES

(1) The DAY OFF setting is only available for days for which weekly settings already exist.
(2) If the operating time carries over to the next day (during a next day setting), the effective DAY OFF range will be set as shown below.

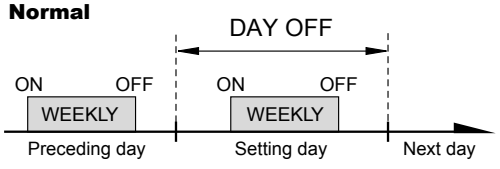

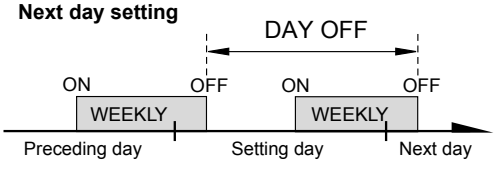

(3) The DAY OFF setting can only be set one time. The DAY OFF setting is cancelled automatically after the set day has passed.

3. TEMPERATURE SET BACK TIMER

Instructions related to heating are applicable to "HEAT PUMP MODELS".
The timer function may not be available because of initial setting.

To set the temperature SET BACK timer

1

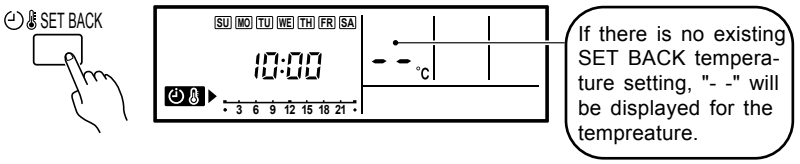

Press the SET BACK button to change to the SET BACK confirmation display.
The SET BACK operating time and the set temperature will be displayed.

2

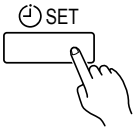

Press the SET button for 2 seconds or more.

3

Day setting **Operating time setting**

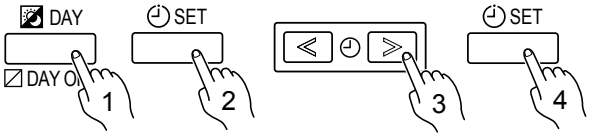

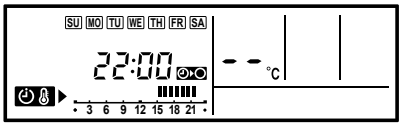

ex. When setting all days together

Follow steps **3** and **4** in "To set the WEEKLY timer " (the previous page). The DELETE button is also used as described in the procedures for the weekly timer.

4

Temperature setting

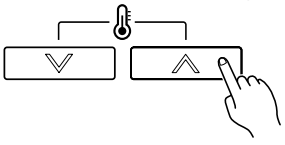

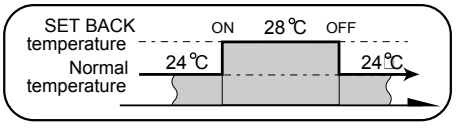

Press the SET TEMPERATURE button to set the temperature (from 10 ℃ to 30 ℃).

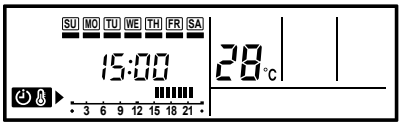

ex. Operating time 15:00 - 22:00

5

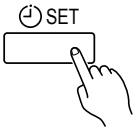

Repeat steps **3** and **4**.
Press the SET button for 2 seconds or more to complete the temperature SET BACK timer settings.

To start/ cancel the temperature SET BACK timer operation

To start

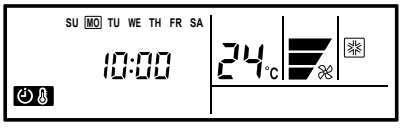

ex. Display during SET BACK timer operation
(The operating time will not be displayed.)

Press the SET BACK button. The SET BACK confirmation display appears for 5 seconds, and then the timer starts automatically.

To cancel

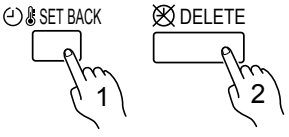

Press the SET BACK button, and then press the DELETE button while the SET BACK confirmation display is displayed. Even if the SET BACK button is pressed again, the SET BACK timer will be cancelled.

NOTES

(1) The SET BACK timer only changes the set temperature, it cannot be used to start or stop air conditioner operation.
(2) The SET BACK timer can be set to operate up to two times per day but only one temperature setting can be used.
(3) The SET BACK timer can be used together with the ON, OFF , and weekly timer functions.
(4) During the COOL/DRY mode, the air conditioner will operate at a minimum of 18℃ even if the SET BACK temperature is set to 17℃ or lower.
(5) The SET BACK operating time is displayed only in the SET BACK confirmation display. (Refer to step 1 for the SET BACK confirmation display.)
(6) Room temperatures as low as 10, 12, and 14℃ cannot be set depending on the model.

5-7-3 GROUP REMOTE CONTROLLER

UTB - YDA

- WEEKLY TIMER

1. WEEKLY TIMER

Instructions related to heating are applicable to "HEAT PUMP MODELS".
The timer function is not available depending on the initial setting.

- **Different schedules can be set for each day of the week.**
- **Four timers can be set for each day.**
- **Operation on/off time, operation mode, and temperature can be specified for each timer.**

To start / cancel the WEEKLY timer operation

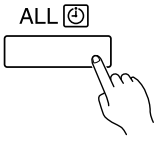

Press the ALL TIMER button to start or cancel the WEEKLY timers for all indoor units.

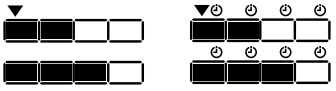

- If any of the indoor units are in the timer mode, pressing this button cancels the timers for all indoor units.
- If none of the indoor units are in the timer mode, pressing this button starts the timers for all indoor units.

Press the Timer Mode (DELETE) button to start or cancel the WEEKLY timers for the indoor units selected by the Select button.

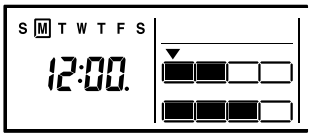

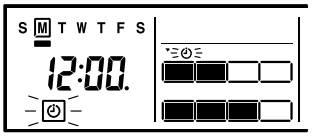

To set the WEEKLY timer

1

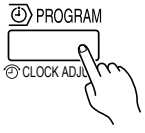

Press the PROGRAM (CLOCK ADJUST) button.
* Do not press this button for two seconds or more, otherwise you will enter the time setting mode.

2

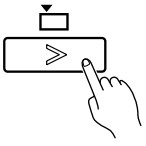

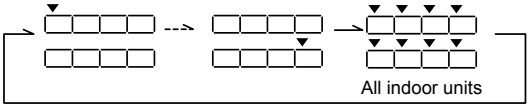

Press the Select button to select the indoor unit.
* If all indoor units are selected, the times for all of the registered indoor unit timers are set at once.

3

● **Day of the week setting**

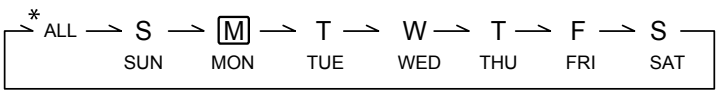

Press the DAY button to select the day of the week.
* For ALL, all of the days can be set together when a ▭ appears around each day

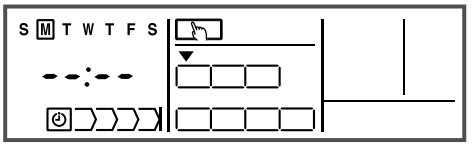

4

● **Timer setting**

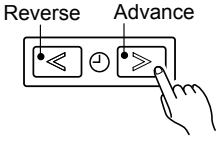

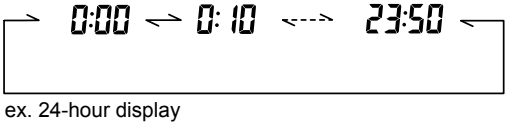

ex. 24-hour display

Press the Set Time buttons to set the time in 10-minute increments.

5 ● Operating setting

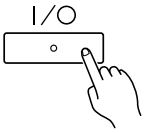

No display → ON → OFF
No setting

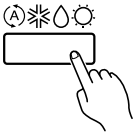

No display → AUTO** → COOL → DRY → FAN** → HEAT*
No setting

* If all of the selected indoor units are COOLING ONLY MODELS, there is a possibility that HEAT cannot be selected.

** If all of the selected indoor units are HEAT PUMP MODELS or if HEAT PUMP MODELS are selected with COOLING ONLY MODELS, there is a possibility that AUTO or FAN cannot be selected.

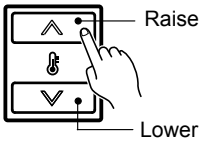

No display → 10℃ → 11℃ → 15℃ → 17℃ → 18℃ → 30℃
No setting

Depend on initial setting

HEAT only

* The temperature setting ranges vary according to the operation mode and initial setting. In addition, the temperature range from 10 to 15℃ is invalid depending on the model even if it can be set.

Press the Start/Stop button or the Master Control button or the Set Temperature button to set the operation.

6 ● Setting the next timer for the same day:

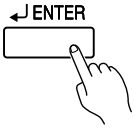

TIMER-1 → TIMER-2 → TIMER-3 → TIMER-4

Then press the ENTER button to proceed to the time setting, and repeat steps from ***4*** to ***5***.

● **Repeat steps *3* to *5* to set the timer for another day of the week.**

7 ● Setting the timer for the other indoor units:

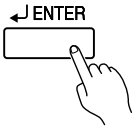

Before setting the timer for other indoor units, press the ENTER button to confirm the settings.

* The display switches to the next timer.

● **Repeat steps *2* to *6* to set the timer for other indoor units.**

8

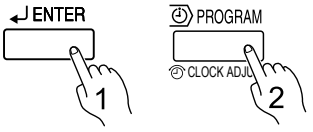

1. Press the ENTER button to confirm the set timer.
2. Press again the PROGRAM (CLOCK ADJUST) button to complete the weekly timer setting.
   * flashes for two seconds.

When the operating time is set, the ■ mark appears.

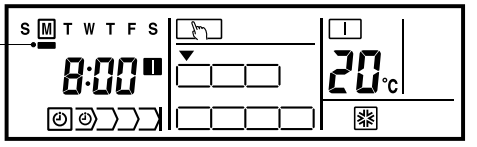

ex. TIMER-1 will start operation at 8:00 on COOL with a setting of 20℃.

● To delete the operating time

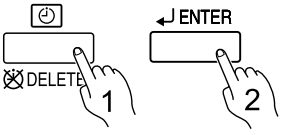

1. If the Timer Mode (DELETE) button is pressed during steps ***3*** to ***7***, the operating time for the selected day will be deleted.
   * If all the days are selected, the operating times for all of the days of the selected timer will be deleted.
2. Press the ENTER button to confirm the deletion.

NOTES

(1) For HEAT PUMP MODEL, Does not operate according to the settings for the HEAT timer during the cooling mode and for the COOL or DRY timer during the heating mode.

(2) Even if the timer operation is set, the timer lamp of the indoor unit does not light up.(The timer lamp is used for wireless cemote controller only.)

Refrigerant
R410A

AIRSTAGE™

J SERIES

6 . TROUBLE SHOOTING

6. TROUBLESHOOTING

6-1 INDOOR UNIT

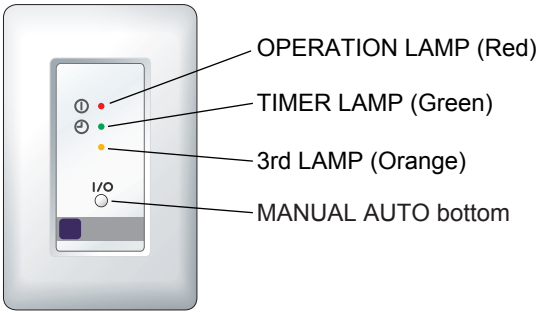

Operation can be checked by lighting and flashing of the LED (OPERATION, TIMER, 3rd) of the receiver unit display section. Perform judgment in accordance with the following.

- TEST RUN

When the air conditioner is operating in test run mode, the OPERATION and TIMER lamps flash slowly at the same time.

- EEEOR

The OPERATION, TIMER and 3rd lamps operate as follows (refer to 6-1-2) according to the error contents.

6-1-1 NORMAL OPERATION DISPLAY

OPERATING CONDITION	INDICATOR LAMP	FLASHING PATTERN
Test run	Operation lamp (red)	ON / OFF: 1.0 sec, 1.0 sec
	Timer lamp (green)	ON / OFF: 1.0 sec, 1.0 sec
*1 Stop (Auto-restart disable DIP SW 2-4 : OFF)	Operation lamp (red)	ON / OFF: 1.0 sec, 1.0 sec
	Timer lamp (green)	ON / OFF: 1.0 sec, 1.0 sec
*2 Defrosting operation (Heating operation) or Oil recovery operation	Operation lamp (red)	ON / OFF: 3.0 sec, 1.0 sec
*3 Opposite Operatoion mode	Operation lamp (red)	ON / OFF
	Timer lamp (green)	ON / OFF: 3.0 sec, 1.0 sec

*1: If a power failure occurred, the lamps of operation and timer flash on and off alternately when the power returns.

*2: While the indoor fan motor stops, the operation lamp flashes on and off.

*3: At the heat pump type, indoor unit operation will be different from outdoor unit operation mode.
The timer lamp indicate as above mentioned.

6-1-2 ABNORMAL OPERATION DISPLAY

■ RECEIVER UNIT LED DISPLAY

Please refer the flashing pattern as follows.

OPERATION LED (RED)	TIMER LED (GREEN)	3rd LED (ORANGE)	CONTENTS	TROUBLE SHOOTING
Continuous flash	Continuous flash	OFF	Model information error	1
Continuous flash	Continuous flash	Continuous flash	Power supply frequency error	2
Continuous flash	4 times flash	1 times flash	EEPROM access error	3
2 times flash	Continuous flash	OFF	Room temperature thermistor error	4
3 times flash	Continuous flash	1 times flash	Heat exchanger inlet thermistor error	5
3 times flash	Continuous flash	2 times flash	Heat exchanger middle thermistor error	6
4 times flash	Continuous flash	OFF	Drain error	7
5 times flash	Continuous flash	1 times flash	Standard wired remote control error	8
5 times flash	Continuous flash	4 times flash	Standard wired token error	9
6 times flash	Continuous flash	OFF	Indoor fan motor error	10
Continuous flash	5 times flash	1 times flash	Serial signal error	11
Continuous flash	3 times flash	3 times flash	Outdoor unit error *	12～36

* Depending on contents of outdoor unit, it may not indicate.

6-2 OUTDOOR UNIT

6-2-1 NORMAL OPERATION DISPLAY

Display Type	LED 1	LED 2	LED 3	LED 4	LED 5	LED 6
Not operating	◎					
Cooling operation	◎	○ (1)				
Heating operation	◎	○ (2)				
Compressor frequency 20 to 30Hz	◎		○ (1)			
Compressor frequency 31 to 40Hz	◎		○ (2)			
Compressor frequency 41 to 50Hz	◎		○ (3)			
Compressor frequency 51 to 60Hz	◎		○ (4)			
Compressor frequency 61 to 70Hz	◎		○ (5)			
Compressor frequency 71 to 80Hz	◎		○ (6)			
Compressor frequency 81 to 90Hz	◎		○ (7)			
Compressor frequency 91Hz ~	◎		○ (8)			
Pressure balance operation	◎			◎		
Oil recovery operation	◎				○ (1)	
Defrosting operation	◎				○ (2)	
Test run	◎				○ (3)	
Pump down completed	◎	○ (2)	○ (2)	○ (2)	○ (2)	○ (2)
SV1 open	◎					○ (2)
SV2 open	◎					○ (1)
Compressor rotation speed protection	◎					○ (5)

Display Method ◎ : Lighted continuously
○ : 0.5sec ON/0.5sec OFF flashing
( ) : Flashing times

● Operation display

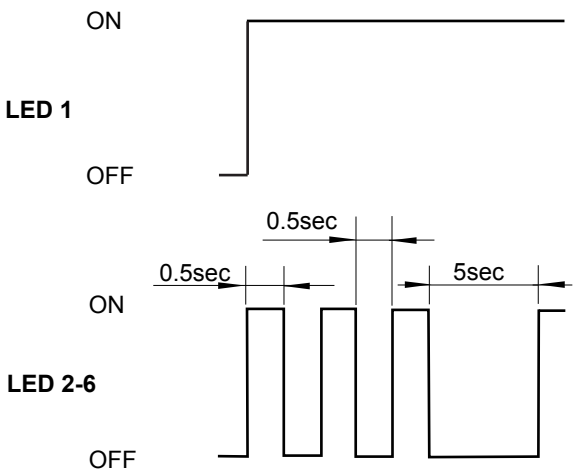

● Outdoor printed circuit board layouts

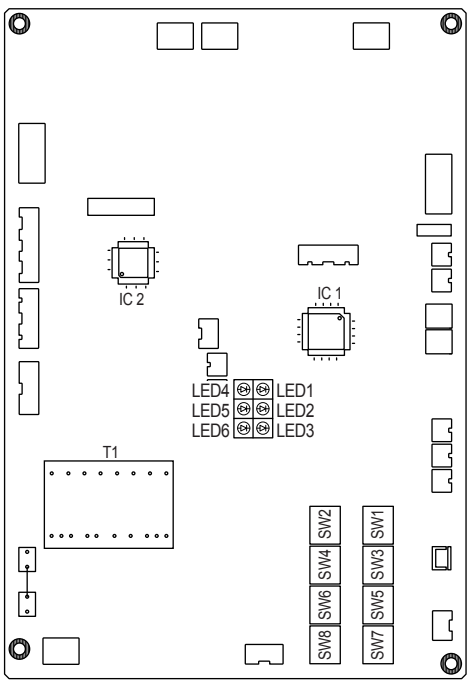

6-2-2 ABNORMAL OPERATION DISPLAY

Display type	LED 1	LED 2	LED 3	LED 4	LED 5	LED 6	TROUBL SHOOTING
Discharge temperature error	◇	● (4)					12
High-pressure error	◇	● (7)					13
Low-pressure error	◇	● (8)					14
Pump down error (High-pressure error)	◇	● (9)					15
Pump down error (Discharge temperature error)	◇	● (10)					16
Pump down error (Other)	◇	● (11)					17
Discharge temperature thermistor error	◇		● (1)				18
Heat exchanger liquid temperature thermistor error	◇		● (4)				19
Heat exchanger (Middle) temperature thermistor error	◇		● (6)				20
Suction temperature thermistor error	◇		● (10)				21
Outdoor temperature thermistor error	◇		● (11)				22
Pressure switch 1 error	◇			● (1)			23
Pressure switch 2 error	◇			● (2)			24
Compressor rotor location detection error	◇			● (4)			25
Electric current trip error	◇			● (5)			26
CT error	◇			● (6)			27
Trip terminal L start-up error	◇			● (9)			28
Power source frequency abnormal	◇				● (2)		29
EEPROM error	◇				● (3)		30
Microcomputers communication error	◇				● (7)		31
Network communication error	◇				● (8)		32
Indoor unit error	◇					● (1): unit0 ● (2): unit1 ● (3): unit2 ● (4): unit3 ● (5): unit4 ● (6): unit5 ● (7): unit6 ● (8): unit7	Refer to Indoor unit Trouble Shooting 1～11

Display method
- ◇ : 0.1 sec ON / 0.1 sec OFF flashing
- ● : 0.3 sec ON / 0.3 sec OFF flashing
- ( ) : Flashing times

● Error display

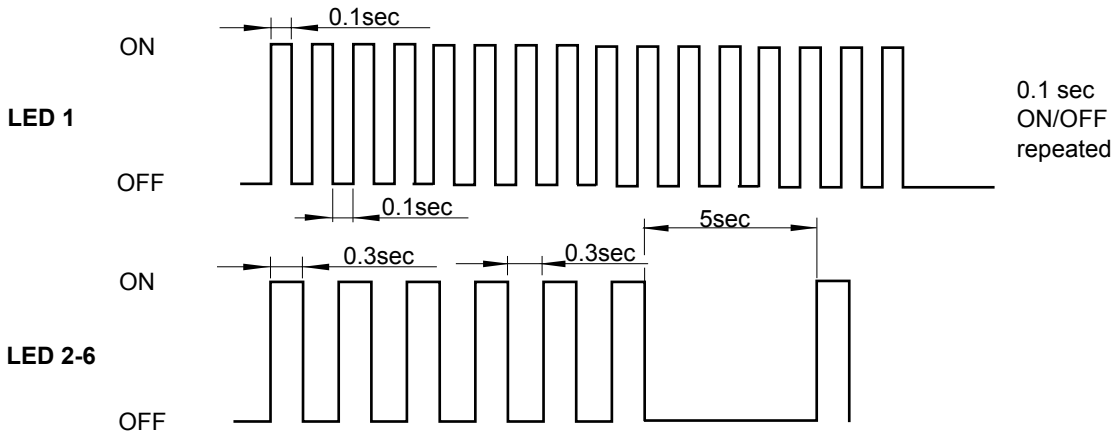

6-3 REMOTE CONTROLLER

6-3-1 WIRED REMOTE CONTROLLER

When the error indication "E:EE" is displayed, inspection of the air conditioning system is necessary. Please consult authoilzed servise personnel.

Run [Self-Diagnosis] if [E:EE] flashes on the clock display of the remote controller.

Error code displayed on wired or simple remote controller

Error Code	Error contents
:00	No error
:02	Model information abnormal
:04	Power supply frequency abnormal
:06	EEPROM access error
:07	EEPROM deletion error
:09	Room temperature themistor error
:0A	Indoor unit heat exchanger themistor (middle) error
:0b	Indoor unit heat exchanger themistor (inlet) error
:0C	Indoor unit heat exchanger themistor (outlet) error
:0d	Blower temperature themistor error
:11	Drain abnormal
:12	Room temperature abnormal
:13	Indoor unit fan error
:1F	Transmission error
:20	Node setting error
:21	Parallel communication error
:32	Outdoor unit error

■ SELF-DIAGNOSIS

(1) Stop the air conditioner operation.
(2) Press the Set Temperature buttons ∧ and ∨ at the same time for more than 5 seconds to start the self-diagnosis.
(3) Press the Set Temperature buttons ∧ and ∨ at the same time for more than 5 seconds to stop the self-diagnosis.

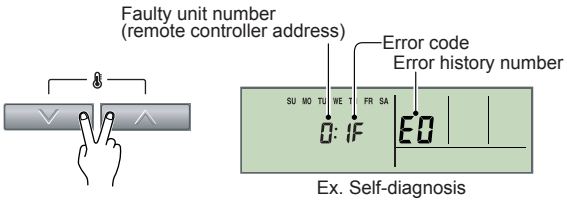

Ex. Self-diagnosis

■ HOW TO DISPLAY INDOOR UNIT ADDRESS AND ERROR CODE HISTORY

1. INDOOR UNIT ADDRESS DISPLAY

Displays the indoor unit refrigerant circuit address and indoor unit address of the indoor unit connected to the remote controller.

(1) Stop the air conditioner operation.

(2)

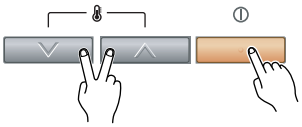

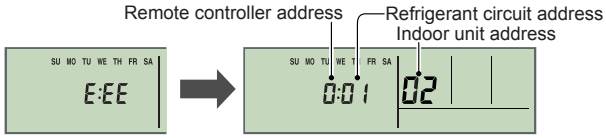

ex. Error display

Press the set temperature buttons ∧/∨ and start/stop button simultaneously for 3 seconds or more

(3)

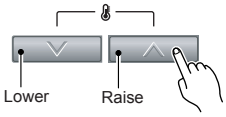

00 ↔ 01 ↔ 02 ↔ 03 ↔ 04 ↔ 05 ↔ 06 ↔ 07
15 ↔ 14 ↔ 13 ↔ 12 ↔ 11 ↔ 10 ↔ 09 ↔ 08

Press the set temperature ∧/∨ button to select the indoor unit (remote controller address).

(4) Press the SET TEMPERATURE buttons simultaneously for 3 seconds or more to stop the display.

2. ERROR CODE HISTORY DISPLAY

Up to 16 memorized error codes may be displayed for the indoor unit connected to the remote controller.

(1) Stop the air conditioner operation.

(2)

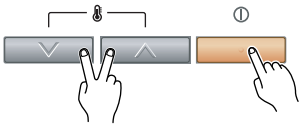

Press the set temperature buttons ∧/∨ and start/stop button simultaneously for 3 seconds or more.

(3)

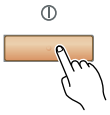

Press the start/stop button.

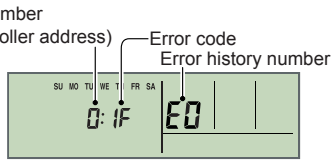

(4)

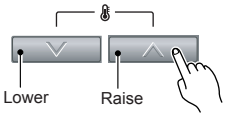

00 ↔ 01 ↔ 02 ↔ 03 ↔ 04 ↔ 05 ↔ 06 ↔ 07
15 ↔ 14 ↔ 13 ↔ 12 ↔ 11 ↔ 10 ↔ 09 ↔ 08

Press the SET TEMPERATURE button to select the error history number.

(5) Press the SET TEMPERATURE buttons simultaneously for 3 seconds or more to stop the display.

6-3-2 SIMPLE REMOTE CONTROLLER

When the error indication " EE EE " is displayed, inspection of the air conditioning system is necessary. Please consult authoilzed servise personnel.

Run [Self-Diagnosis] if EE EE flashes on the clock display of the remote controller.

Error code displayed on wired or simple remote controller

Error Code	Error contents
:00	No error
:02	Model information abnormal
:04	Power supply frequency abnormal
:06	EEPROM access error
:07	EEPROM deletion error
:09	Room temperature themistor error
:0A	Indoor unit heat exchanger themistor (middle) error
:0b	Indoor unit heat exchanger themistor (inlet) error
:0C	Indoor unit heat exchanger themistor (outlet) error
:0d	Blower temperature themistor error
:11	Drain abnormal
:12	Room temperature abnormal
:13	Indoor unit fan error
:1F	Transmission error
:20	Node setting error
:21	Parallel communication error
:32	Outdoor unit error

■ SELF-DIAGNOSIS

(1) Stop the air conditioner operation.
(2) Press the Fan control button and the Set Temperature buttons ▲ at the same time for more than 5 seconds to start the self-diagnosis.
(3) Press the Fan control button and the Set Temperature buttons ▲ at the same time for more than 5 seconds to stop the self-diagnosis.

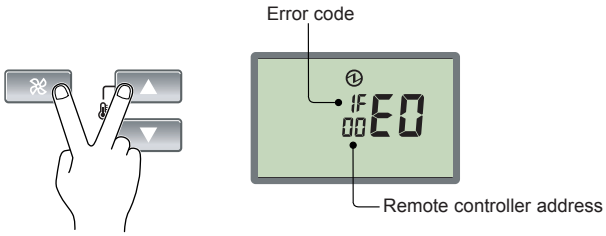

■ HOW TO DISPLAY INDOOR UNIT ADDRESS AND ERROR CODE HISTORY

1. INDOOR UNIT ADDRESS DISPLAY

Displays the indoor unit refrigerant circuit address and indoor unit address of the indoor unit connected to the remote controller.

(1) Stop the air conditioner operation.

(2)

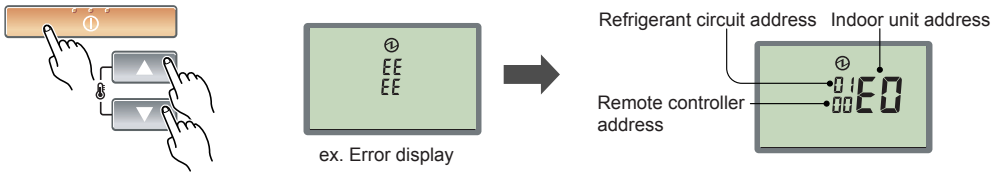

ex. Error display

Press the set temperature buttons ▲ / ▼ and start/stop button simultaneously for 3 seconds or more

(3)

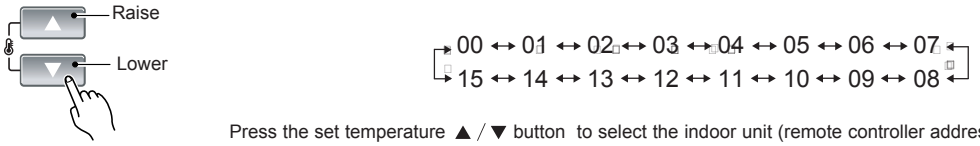

Press the set temperature ▲ / ▼ button to select the indoor unit (remote controller address).

(4) Press the SET TEMPERATURE buttons simultaneously for 3 seconds or more to stop the display.

2. ERROR CODE HISTORY DISPLAY

Up to 16 memorized error codes may be displayed for the indoor unit connected to the remote controller.

(1) Stop the air conditioner operation.

(2)

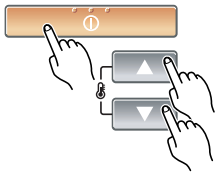

Press the set temperature buttons ▲ / ▼ and start/stop button simultaneously for 3 seconds or more.

(3)

Press the start/stop button.

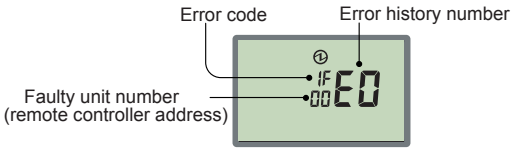

(4)

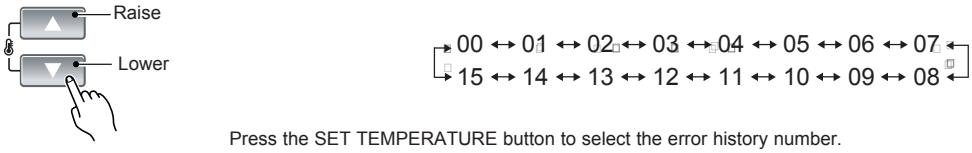

Press the SET TEMPERATURE button to select the error history number.

(5) Press the SET TEMPERATURE buttons simultaneously for 3 seconds or more to stop the display.

6-3-3 GROUP REMOTE CONTROLLER

When the error indication "E∗:∗∗" is displayed, inspection of the air conditioning system is necessary. Please consult authoilzed servise personnel.

Run [Self-Diagnosis] if [E∗:∗∗] flashes on the clock display of the remote controller.

■ SELF-DIAGNOSIS

(1) The air conditioning system must be inspected if "E∗: ∗∗" (error code) appears on the Timer and Clock Display, or the operation lamp is flashing.
The following explains the meaning of each of the error codes.

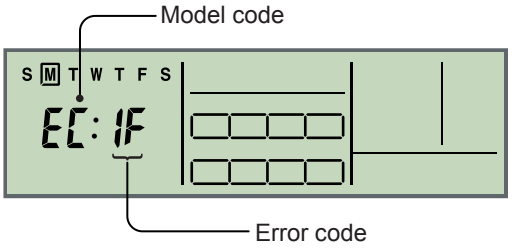

Model code
- 0 : Outdoor unit
- 1 : Indoor unit
- C : Group remote controller
- A : Convertor

(2) When an indoor unit operation indicator is flashing, it means that error occurs at the indoor unit.
(3) Press SELECT button to move cursor to the corresponding indoor unit.
Error code "E1:∗∗ " will appears.

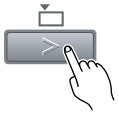

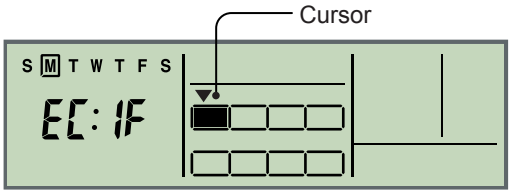

■ HOW TO DISPLAY ERROR CODE HISTORY

Up to 16 memorized error codes may be displayed for the indoor unit connected to the remote controller.

(1) Stop the air conditioner operation.

(2)

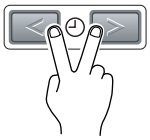

Press the SET TIME buttons < / > simultaneously for 3 seconds or more.

(3) Press the SET TEMPERATURE buttons ∧/∨ several times until "E5" appears on the temperature display.

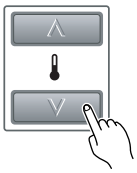

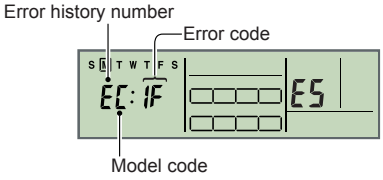

(4)

00 ↔ 01 ↔ 02 ↔ 03 ↔ 04 ↔ 05 ↔ 06 ↔ 07
15 ↔ 14 ↔ 13 ↔ 12 ↔ 11 ↔ 10 ↔ 09 ↔ 08

Press the DAY button to select the error history number.

(5)

Press the TIME MODE(DELETE) buttons for more than 3 seconds to clear the error histories if necessary.

(5) Press the SET TIME buttons < / > simultaneously for more than 3 seconds to stop the function.

■ Error code displayed on group remote controller

Error Code	0 Outdoor unit error	1 Indoor unit error	CA Group remote controller error Convertor error
00	No error	No error	No error
01	-	-	-
02	Model information abnormal	Model information abnormal	-
03	Microcomputer communication error	Microcomputer communication error	Microcomputer communication error
04	Power supply frequency abnormal	Power supply frequency abnormal	-
05	-	-	Parallel communication error
06	EEPROM access error	EEPROM access error	EEPROM access error
07	EEPROM deletion error	EEPROM deletion error	-
08	-	-	-
09	Compressor 1 error	Room temperature thermistor error	-
0A	Compressor 2 error	Heat exchanger thermistor (middle) error	-
0b	Compressor 3 error	Heat exchanger thermistor (inlet) error	-
0C	-	Heat exchanger thermistor (outlet) error	-
0d	Discharge temperature thermistor 1 error	Blower temperature thermistor error	-
0E	Discharge temperature thermistor 2 error	-	-
0F	Discharge temperature thermistor 3 error	-	-
10	Outdoor temperature thermistor error	-	-
11	Heat exchanger inlet thermistor 1 error	Drain abnormal	-
12	Heat exchanger inlet thermistor 2 error	Room temperature abnormal	-
13	Heat exchanger inlet thermistor 3 error	Indoor unit fan error	-
14	Heat exchanger outlet thermistor 1 error	-	-
15	Heat exchanger outlet thermistor 2 error	-	-
16	Heat exchanger outlet thermistor 3 error	-	-
17	Suction temperature thermistor error	-	-
18	-	Standard wired remote control communication error	Standard wired remote control communication error
19	Discharge pressure sensor error	-	-
1A	Liquid pressure sensor error	-	Address setting error
1b	Suction pressure sensor error	-	-
1C	Oil sensor error	-	Connection error
1d	-	-	System error
1E	-	-	-
1F	Transmission error	Transmission error	Transmission error
20	-	-	-
21	Discharge temperature 1 error	-	-
22	Discharge temperature 2 error	-	-
23	Discharge temperature 3 error	-	-
24	High-pressure error	-	-
25	Low-pressure error	-	-
26	-	-	-
27	Oil recovery error	-	-
28	Pump down error	-	-

6-4 NETWORK CONVERTER

The red LED (D110) in Main PCB blinks for approx. 3 seconds during the initializing when the power is turned on or reset (initialized). When the initializing is successfully compeleted, LED (D110) lights up, and the greed LED (D111, D113, D114) also light up.
Error code of Network Converter is indicated with 4 digits on 7 segment LED (D118, D119) in Main PCB.

LED (Color)	Item related	LED condition at initializing (Approx. 3 sec.)	Normal LED condition
D110 (RED)	Power LED	Blinking	ON
D111 (GREEN)	Main PCB LED	OFF	ON
D112 (GREEN)	Top PCB LED	OFF (not mounted)	OFF (not mounted)
D113 (GREEN)	Middle PCB LED	OFF	ON
D114 (GREEN)	Bottom PCB LED	OFF	ON

Error code displayed on network convertor

ERROR CODE	ERROR CONTENTS
	Normal
E0 09	System malfunction
E2 09	Bottom circuit board connected incorrectly
E3 09	Middle circuit board connected incorrectly
E0 08	Main circuit board maintenance error
E2 08	Middle circuit board maintenance error
E3 08	Bottom circuit board maintenance error

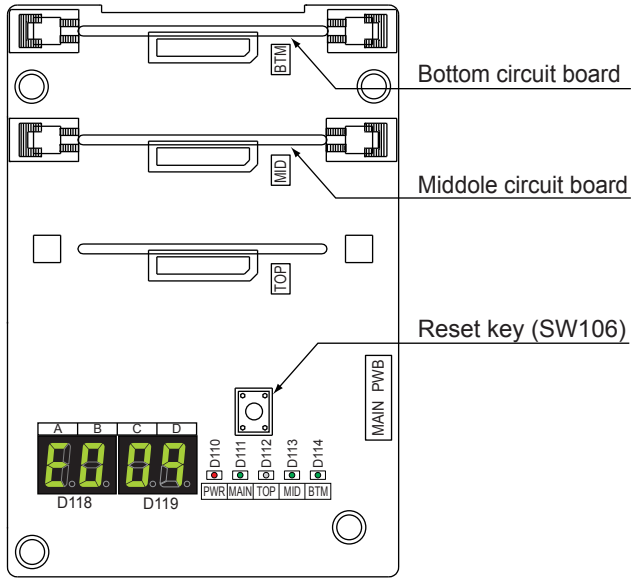

6-5 TROUBLE SHOOTING

6-5-1 TROUBLE SHOOTING WITH ERROR CODE (INDOOR UNIT)

Trouble shooting 1 **INDOOR UNIT Error Method:** **MODEL INFORMATION ERROR**	**Indicate or Display:** **Indoor Unit : Operation LED Flash, Timer LED Flash** **3rd LED OFF** **Outdoor Unit : LED1 Flash, LED6 1～8TIMES Blink (Indoor Unit address)** **ERROR CODE : E:02**
Detective Actuators: **Circuitry in indoor unit Control PCB**	**Detective details:** **When power is turned on, EEPROM read ERROR has been occurred (2times matching read Test is failed for 3 times in a row),or the model information that was read in from EEPROM has an apparent error.** **Release : Model information, which is memorized in EEPROM is recovered normally.**

Forecast of Cause : 1 .Power supply circuit (Voltage drop / Noise) 2.Indoor unit electrical parts defective

Check Point 1 : Check Power supply

- **Check external cause (Power supply)**
- **Instant Drop ・・・Check if there is an electric equipment with a large load in the same circuit.**
- **Instant Power Outage ・・・Check if there is a defective contact or leakage in the power supply.**
- **Noise・・・・Check if there is any equipment that cause the harmonic wave near the power line.**
  (Neon tube or Electric equipment that harmonic wave Check that the grounding is completely insulated.)

Check Point 2 : Indoor unit electrical parts defective

Check connection / removal / incorrect wiring of all the connectors.
Check if short mark or corrosion is on PCB
Replace Control PCB and set up the original address,then check the normal operation.

Trouble shooting 2 INDOOR UNIT Error Method: POWER SUPPLY FREQUENCY ERROR	Indicate or Display: Indoor Unit : Operation LED Flash, Timer LED Flash 3rd LED Flash Outdoor Unit : LED1 Flash, LED6 1～8TIMES Blink (Indoor Unit address) ERROR CODE : E:04

Detective Actuators: Circuitry in indoor unit Control PCB	Detective details: When power is turned on, frequency defective occurred (test 2times matching read Test is failed for 5 times in a row) Lower than 45Hz or higher than 66Hz.

Forecast of Cause:

1.Relation of installation construction of unit

1) Use of standard material
2) Power supply circuit (voltage drop / Noise etc.)

1) Check connection of POWER CORD
2) Check Control PCB (Parts defective)

Check Point 1-1 : Check the installation work

- **Check Cable / Breaker**
- **Check if any loose connection or removal of cable.**

Use		Wire size [cross-section (mm^2)]	Remark
Power supply cable	Outdoor unit	5.0 to 8.0	H07RN-F or equivalent, Single-phase, 50HZ, 220-240V, 2Wire + Ground
Connection cable	Indoor unit	≧ 2.5	H07RN-F or equivalent, Single-phase, 50HZ, 220-240V, 3Wire + Ground
		≧ 1.5 (If total wire length < 50 m)	
Circuit breaker		30 (A)	

Follow the installation Manual if any installation failure is found.

Check Point 1-2 : Check Power supply

- **Check external cause (Power supply)**
- **Instant Drop ・・・Check if there is an electric equipment with a large load in the same circuit.**
- **Instant Power Outage ・・・Check if there is a defective contact or leakage in the power supply.**
- **Noise・・・・Check if there is any equipment that cause the harmonic wave near the power line.**
  (Neon tube or Electric equipment that harmonic wave Check that the grounding is completely insulated.)

Check Point 2-1 : Check connection of POWER CORD

1)Check the voltage of supply voltage AC220～240V between (L1) - (L2).

If AC does not appear, check the circuitry of power supply side.

2)Check the wiring (incorrect wiring / loose wiring) of connection cable.

If there was an incorrect wiring or loose wiring, turn off the breaker and then repair.

Check Point 2-2 : Check Electrical Component of Indoor Unit

Check connection / removal / incorrect wiring of all the connectors.
Check if short mark or corrosion is on PCB
Replace Control PCB and set up the original address,then check the normal operation.

Trouble shooting 3 INDOOR UNIT Error Method: INDOOR UNIT EEPROM ACCESS ERROR	Indicate or Display: Indoor Unit : Operation LED Flash, Timer LED 4 Times Blink 3rd LED 1 Times Blink Outdoor Unit : LED1 Flash, LED6 1～8TIMES (Indoor Unit address) ERROR CODE : E:06

Detective Actuators:	Detective details:
Circuitry inside Indoor Unit Controller PCB	Upon Indoor unit has been started, the access to the external memory (EEPROM) is failed due to some kind of cause such as external interface Or defective component.

Forecast of Cause : 1 .Power supply Circuit (Voltage drop / Noise) 2.Defective electrical component of indoor unit

Check Point 1 : Check Power supply

- Check external cause (Power supply)
- Instant Drop ・・・Check if there is an electric equipment with a large load in the same circuit.
- Instant Power Outage ・・・Check if there is a defective contact or leakage in the power supply.
- Noise・・・・Check if there is any equipment that cause the harmonic wave near the power line.
  (Neon tube or Electric equipment that harmonic wave Check that the grounding is completely insulated.)

Check Point 2 : Check Electrical Component of Indoor Unit

Check connection / removal / incorrect wiring of all the connectors.
Check if short mark or corrosion is on PCB
Replace Control PCB and set up the original address,then check the normal operation.

Trouble shooting 4 **INDOOR UNIT Error Method:** ROOM TEMPERATURE THERMISTOR ERROR	**Indicate or Display:** Indoor Unit : Operation LED 2 Times Blink, Timer LED Flash 3rd LED OFF Outdoor Unit : LED1 Flash, LED6 1～8TIMES Blink (Indoor Unit address) ERROR CODE : E:09

Detective Actuators: Room temperature thermistor	**Detective details:** If open room temp. thermistor is detected at the power on, or when SHORT room temp. thermistor is detected at the power on.

Forecast of Cause:
1. Connector connection failure
2. Thermistor failure
3. Control PCB defective

Check Point 1 : Check the installation work

- Removed connector
- Incorrect wiring
- Thermistor cable is cut off

☆When reworking on loose connector, incorrect wiring, keep the power shut off.

Check Point 2 : Remove connector and measure the resistance value of thermistor

Thermistor characteristics (Approx)

Temperature (℃)	0	5	10	15	20	25	30	35
Resistance Value (kΩ)	33.6	25.2	20.1	15.8	12.5	10.0	8.0	6.5

Temperature (℃)	40	45	50
Resistance Value (kΩ)	5.3	4.3	3.5

☆Turn off the main power, replace the thermistor is it was open or short, then turn on the main power.

Check Point 3 : Check DC5.0V of Control PCB voltage

Check each indoor unit circuit diagram, and check the voltage at both terminal of thermistor.

Indoor unit wiring diagram

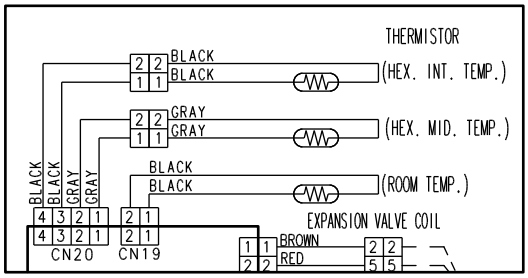

Heat exchanger Temp (Inlet)Thermo (Wire: BLACK)

Heat exchanger Temp (Mid)Thermo (Wire:GRAY)

Room temp. thermo (Wire: BLACK)

M3 Chassis Wiring Diagram(Direct soldering to Control PCB) No wiring connector.

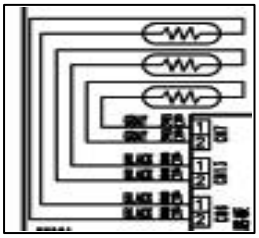

Heat exchanger Temp (Mid)Thermo. (Wire:GRAY)
Heat exchanger Temp Thermo (Wire: BLACK)
Room temp. thermo (Wire: BLACK)

☆If it is not possible to check the voltage, replace Control PCB and set up the original address.

Trouble shooting 5 INDOOR UNIT Error Method: HEAT EXCHANGER (Inlet) THERMISTOR ERROR	Indicate or Display: Indoor Unit : Operation LED 3 Times Blink, Timer LED Flash 3rd LED 1time Blink Outdoor Unit : LED1 Flash, LED6 1～8TIMES Blink (Indoor Unit address) ERROR CODE : E:06

Detective Actuators: Heat exchanger (Inlet) temperature thermistor	Detective details: If open heat exchanger (Inlet) temp, thermistor is detected at the power on, or when SHORT heat exchanger (Inlet) temp. thermistor is detected at the power on.

Forecast of Cause:
1. Connector connection failure
2. Thermistor failure
3. Control PCB defective

Check Point 1 : Check the installation work

- Removed connector
- Incorrect wiring
- Thermistor cable is cut off

☆When reworking on loose connector, incorrect wiring, keep the power shut off.

Check Point 2 : Remove connector and measure the resistance value of thermistor

Thermistor characteristics (Approx)

Temperature (℃)	0	5	10	15	20	25	30	35
Resistance Value (kΩ)	176.0	134.2	103.3	80.2	62.9	49.6	39.5	31.7

Temperature (℃)	40	45	50
Resistance Value (kΩ)	25.6	20.8	17.0

☆Turn off the main power, replace the thermistor is it was open or short, then turn on the main power.

Check Point 3 : Check DC5.0V of Control PCB voltage

Check each indoor unit circuit diagram, and check the voltage at both terminal of thermistor.

Indoor unit wiring diagram

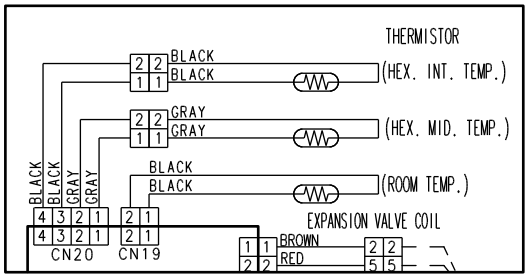

Heat exchanger Temp (Inlet)Thermo (Wire: BLACK)

Heat exchanger Temp (Mid)Thermo (Wire:GRAY)

Room temp. thermo (Wire: BLACK)

M3 Chassis Wiring Diagram(Direct soldering to Control PCB) No wiring connector.

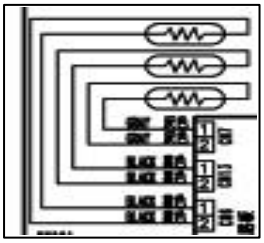

Heat exchanger Temp (Mid)Thermo. (Wire:GRAY)
Heat exchanger Temp Thermo (Wire: BLACK)
Room temp. thermo (Wire: BLACK)

☆If it is not possible to check the voltage, replace Control PCB and set up the original address.

Trouble shooting 6 **INDOOR UNIT Error Method:** HEAT EXCHANGER (Middle) THERMISTOR ERROR	**Indicate or Display:** Indoor Unit : Operation LED 3 Times Blink, Timer LED Flash 3rd LED 2time Blink Outdoor Unit : LED1 Flash, LED6 1～8TIMES Blink (Indoor Unit address) ERROR CODE : E:0A

Detective Actuators: Heat exchanger (Middle) temperature thermistor	**Detective details:** If open heat exchanger (Middle) temp, thermistor is detected at the power on, or when SHORT heat exchanger (Mddle) temp. thermistor is detected at the power on.

Forecast of Cause:
1. Connector connection failure
2. Thermistor failure
3. Control PCB defective

Check Point 1 : Check the installation work

- Removed connector
- Incorrect wiring
- Thermistor cable is cut off

☆When reworking on loose connector, incorrect wiring, keep the power shut off.

Check Point 2 : Remove connector and measure the resistance value of thermistor

Thermistor characteristics (Approx)

Temperature (℃)	0	5	10	15	20	25	30	35
Resistance Value (kΩ)	176.0	134.2	103.3	80.2	62.9	49.6	39.5	31.7

Temperature (℃)	40	45	50
Resistance Value (kΩ)	25.6	20.8	17.0

☆Turn off the main power, replace the thermistor is it was open or short, then turn on the main power.

Check Point 3 : Check DC5.0V of Control PCB voltage

Check each indoor unit circuit diagram, and check the voltage at both terminal of thermistor.

Indoor unit wiring diagram

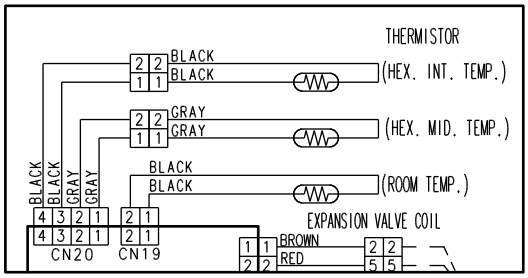

Heat exchanger Temp (Inlet)Thermo (Wire: BLACK)

Heat exchanger Temp (Mid)Thermo (Wire:GRAY)

Room temp. thermo (Wire: BLACK)

M3 Chassis Wiring Diagram(Direct soldering to Control PCB) No wiring connector.

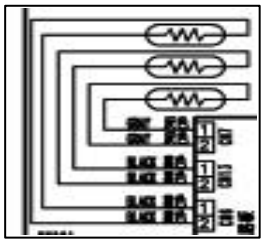

Heat exchanger Temp (Mid)Thermo. (Wire:GRAY)
Heat exchanger Temp Thermo (Wire: BLACK)
Room temp. thermo (Wire: BLACK)

☆If it is not possible to check the voltage, replace Control PCB and set up the original address.

Trouble shooting 7 INDOOR UNIT Error Method: DRAIN ERROR	Indicate or Display: Indoor Unit : Operation LED4 Times Blink, Timer LED Flash 3rd LED OFF Outdoor Unit : LED1 Flash, LED6 1～8TIMES Blink (Indoor Unit address) ERROR CODE : E:11

Detective Actuators: Circuitry in indoor unit Control PCB & Float Switch	Detective details: When Float switch is kept ON for more 3 minutes.

Forecast of Cause:

1. Float switch defective
2. Connector / Cable shorted
3. Control PCB defective

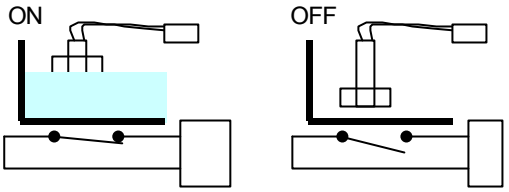

Check Point 1 : Check Float SW

- Check the float switch operation if it is caught by drip or a stop
- Remove the float switch and check ON / OFF switching function by detective with a mater.

☆If the float switch is defective replace it.

Check Point 2 : Check Connector(CN15:AU25 type) / Wiring

- Check if CN15 has a defective contact or shorted wiring.

☆If wire is abnormal, replace the float switch.

Check Point 3 : Check Control PCB

- If above Check 1,2 do not solve the problem, replace Control PCB and set up the original address.

Trouble shooting 8 INDOOR UNIT Error Method: STANDARD WIRED REMOTE CONTROLLER ERROR	Indicate or Display: Indoor Unit : Operation LED 5 Times Blink, Timer LED Flash 3rd LED 1Time Blink Outdoor Unit : LED1 Flash, LED6 1～8TIMES Blink (Indoor Unit address) ERROR CODE : E:18

Detective Actuators: Circuitry in indoor unit Control PCB	Detective details: When the signal from Wired Remote Controller could not be received more than 1 minute upon receiving the signal more than once.

Forecast of Cause:

1. Terminal connection detective, Incorrect wiring, Winding cable is cut off
2. Wired remote controller defective
3. Control PCB defective

Check Point 1 : Check connection of terminal / Cable

・Check if there is an incorrect connection of the terminal between Indoor unit - Remote controller, or if the cable is cut off

☆Always turn off the power before repairing the incorrect wiring.

Check Point 2,3 : To sort out the defective of Remote controller and Control PCB.

・Check the terminal voltage of Control PCB CN17 - 1, CN17 – 2(Duct type).
(Check the supply voltage to Remote controller)

DC+12V → Controller PCB is OK ---- Remote controller PCB is defective
DC 0V → Control PCB is defective ---- Remote controller to be Check also.
☆When reworking on loose connector, incorrect wiring, keep the power shut down.

Trouble shooting 9 INDOOR UNIT Error Method: STANDARD WIRED TOKEN ERROR	Indicate or Display: Indoor Unit : Operation LED 5 Times Blink, Timer LED Flash 3rd LED 4Time Blink Outdoor Unit : LED1 Flash, LED6 1～8TIMES Blink (Indoor Unit address) ERROR CODE : E:18

Detective Actuators: Circuitry in indoor unit Control PCB	Detective details: When token is not received more than 1 minute upon token was received more than one time.

Forecast of Cause:

1. Terminal connection detective, Incorrect wiring, Winding cable is cut off
2. Wired remote controller defective
3. Control PCB defective

Check Point 1 : Check connection of terminal / Cable

・Check if there is an incorrect connection of the terminal between Indoor unit - Remote controller, or if the cable is cut off

☆Always turn off the power before repairing the incorrect wiring.

Check Point 2,3 : To sort out the defective of Remote controller and Control PCB.

・Check the terminal voltage of Control PCB CN17 - 1, CN17 – 2(Duct type).
(Check the supply voltage to Remote controller)

DC+12V → Controller PCB is OK ---- Remote controller PCB is defective
DC 0V → Control PCB is defective ---- Remote controller to be Check also.
☆When reworking on loose connector, incorrect wiring, keep the power shut down.

Trouble shooting 10 INDOOR UNIT Error Method: INDOOR FAN ERROR	Indicate or Display: Indoor Unit : Operation LED 6 Times Blink, Timer LED Flash 3rd LED OFF Outdoor Unit : LED1 Flash, LED6 1～8TIMES Blink (Indoor Unit address) ERROR CODE : E:13

Detective Actuators:	Detective details:
Circuitry in indoor unit Control PCB	When Motor is in operation and the feedback speed condition becomes at 0 for more than 1 minute. Or, the feedback speed becomes 1 / 3 or less of the target speed for more than 1minute.

Forecast of Cause:

1. Check Fan motor rotation (Fan caught, come off, motor locked)
2. Check Motor coil
3. Motor protection is activated by excessive increase of surrounding temperature.
4. Check capacitor
5. Control PCB

Check Point 1 : Check Fan rotation
・At the stop operation, turn the fan by hand and check if it rotes. ・Check if the fan is loose from the shaft.
☆If either fan or bearing is defective, replace it.

Check Point 2 : Check Motor Coil
Check Indoor Fan Motor (PARTS INFORMATION 13～15)
☆If Fan motor is abnormal, replace it.

Check Point 3 : Motor protection is activated by excessive increase of surrounding temperature
・Check if the temperature around the motor is excessively high.
☆Rework if the temperature is abnormal

Check Point 4 : Check Out put voltage of control PCB
・Check each Indoor unit circuit diagram and check the voltage.
☆If control PCB is abnormal, replace it

Check Point 5 : Check FAN Capacitor
・Check the continuity of Capacitor for FAN Motor.
☆If it is shorted, replace the capacitor

Trouble shooting 11 INDOOR UNIT Error Method: SERIAL SIGNAL ERROR	Indicate or Display: Indoor Unit : Operation LED Flash, Timer LED 5 Times Blink 3rd LED 1 Times Blink Outdoor Unit : LED1 Flash, LED6 1~8TIMES Blink (Indoor Unit address) ERROR CODE : E:1F

Detective Actuators: Circuitry in indoor unit Control PCB	Detective details: When the control information from the indoor unit that is recognized by outdoor unit could not be received more than 20 seconds, LED indicates abnormal condition.

Forecast of Cause :

If only certain indoor unit shows abnormal indication.
1) Connection cable
2) Check communication PCB
3) Check electrical component of indoor unit
4) Check power supply

If all system shows abnormal indication.
1) Connection cable
2) Check communication PCB
3) Check outdoor unit
4) Check power supply

If only certain indoor unit shows abnormal indication.

Check Point 1 : Check Connection cable

☆Check if the restarts by turning ON the power again.
Check connection cable
1) Check Loose screw / Removed Cable on Terminal
2) Check the connection of terminal connection of ①,②,③, to Control PCB

Check Point 2 : Check Communication PCB

・Check connection (connector) of Signal PCB to terminal connection.
・Check FUSE F401 Communication PCB

☆If fuse F401 is open, check any incorrect wiring of connection cable,and replace the FUSE.

Check Point 3 : Check Indoor unit electrical parts

・Check all connector's connection, removal, incorrect wiring.
・Check if any shorted mark or corrosion on PCB

☆If detective portion is uncertain, replace Control PCB, set up the original address and Check the operation.

If all system shows abnormal indication.

Check Point 1 : Check Connection cable

☆Check if the restarts by turning ON the power again.
Check connection cable
1) Check Loose screw / Removed Cable on Terminal
2) Check the connection of terminal connection of ①,②,③, to Control PCB

Check Point 2 : Check Communication PCB

・Check connection (connector) of Signal PCB to terminal connection.
・Check FUSE F401 Communication PCB

☆If fuse F401 is open, check any incorrect wiring of connection cable,and replace the FUSE.

Check Point 3 : Check Outdoor unit

Refer to Trouble shooting 32
NETWORK COMMUNICATION ERROR

Check Point 4 : Check Power supply

・Check external cause (Power supply)
・Instant Drop ・・・Check if there is an electric equipment with a large load in the same circuit.
・Instant Power Outage ・・・Check if there is a defective contact or leakage in the power supply.
・Noise・・・・Check if there is any equipment that cause the harmonic wave near the power line.
(Neon tube or Electric equipment that harmonic wave Check that the grounding is completely insulated.)

6-5-2 TROUBLE SHOOTING WITH ERROR CODE (OUTDOOR UNIT)

Trouble shooting 12 **OUTDOOR UNIT Error Method:** **DISCHARGE TEMPERATURE ERROR**	**Indicate or Display:** **Indoor Unit : Operation LED Flash, Timer LED 3 Times Blink** **3rd LED 3 Times Blink** **Outdoor Unit : LED1 Flash, LED2 4 Times Blink** **ERROR CODE: E:32**
Detective Actuators: **Discharge temperature thermistor**	**Detective details:** **When Compressor stop 3 times or more by detecting Discharge temperature protection (detection higher than 118°C) with in 40 minutes.** **Release: Compressor STOP, Discharge TEMP.detection less than 93°C.**

Forecast of Cause:

1. Leak of refrigerant
2. Error detection by defective mounting of thermistor or cut off.
3. SV2 operation defective
4. Check for Outdoor Unit fan
5. EEV operation defective
6. EV-KIT operation defective
7. 3 way valve was not open

Check Point 1 : Check Out of Gas or Gas Leak of Refrigerant

- **Conduct Leak Check at Piping connection.**
- **Check if the refrigerant amount is proper by measuring Gas pressure.**
  (Condensation temp., Refrigerant Pressure Chart) Refer to Service manual 8-4-2
- **Check Leak portion.**
  SEALING TEST
  Charge the piping with nitrogen to the sealing test pressure (600psi[4.15Mpa]).
  After 24 hours, check that pressure has not fallen.
  Note: When the ambient temperature changes by 5°C, the test pressure changes about 10psi(0.07Mpa).

When the refrigerant is recharged, make sure to perform the vacuuming and charge the originally specified amount.

Check Point 2 : Error detection by defective mounting thermistor or cut off

- **Thermistor came off the holder**
- **Check if the cable is caught in etc,**
- **Check the thermistor characteristics Trouble shooting 18**

☆If the thermistor is abnormal, replace the thermistor

Check Point 3 : SV2 (Bypass valve) operation defective

- **Check the connection of SV2 (CN5)of control PCB.**
- **Check around SV2 (Bypass Valve) (Parts Information 9)**

☆If either SV2 or Coil was abnormal, replace it.

Check Point 4 : Check for Outdoor Unit fan, control PCB

- **Check the fan hand and check if it turns normal.**
- **Check around Outdoor fan motor (Parts Information 7)**
- **Check if the air flow route of Outdoor unit fan is blocked.**

☆If Outdoor fan motor is defective, replace it.

Check Point 5 : Check EV - KIT

- **Check around EV - KIT (PARTS INFORMATION 11)**

☆Replace EV - KIT if it is defective.

Check Point 6 : Check valve opening

☆If the valve was closed, open it and check the condition.

Trouble shooting 13 OUTDOOR UNIT Error Method: HIGH PRESSURE ERROR	Indicate or Display: Indoor Unit : Operation LED Flash, Timer LED 3 Times Blink 3rd LED 3 Times Blink Outdoor Unit : LED1 Flash, LED2 4 Times Blink ERROR CODE: E:32

Detective Actuators: Pressure SW1 (Hi pressure) OPEN	Detective details: Compressor is stopped if the high pressure protection (Pressure SW1 : OFF,more than 609psi [4.2Mpa]) is detected for 2 times or more within 20 minutes, error is indicated and error information is output to the network. Release : Pressure SW1 detects ON and release after 10 minutes.

Forecast of Cause:

1. 3 way valve was not open
2. Check around Pressure SW 1
3. Amount of refrigerant
4. Check for Outdoor Unit fan
5. Check EEV1 operation
6. Check EV - KIT operation
7. Check Indoor unit Fan rotation

Check Point 1 : Check valve opening

☆If the valve was closed, open it and check the condition.

Check Point 2 : Check around Pressure SW 1

- Check removed connection or cable cut off.
- Check around Pressure SW 1 (PARTS INFORMATION 8)

☆Replace Pressure SW1 if it is defective, and check the operating condition.

Check Point 3 : Check Out of Refrigerant

- Check if the refrigerant amount is proper by measuring Gas pressure.
  (Condensation temp., Refrigerant Pressure Chart) Refer Service manual 8-4-2
  When the refrigerant is recharged, make sure to perform the vacuuming and charge the originally specified amount.

Check Point 4 : Check for Outdoor Unit fan

- Check the fan hand and check if it turns normal.
- Check around Outdoor fan motor (Parts Information 7)
- Check if the air flow route of Outdoor unit fan is blocked.

☆If Outdoor fan motor is defective, replace it.

Check Point 5 : Check Outdoor unit EEV1

- Check around Outdoor unit EEV1 (PARTS INFORMATION 10)

☆If Outdoor unit EEV1 is defective , replace it

Check Point 6 :Check EV - KIT

- Check around EV - KIT (PARTS INFORMATION 11)

☆Replace EV - KIT if it is defective.

Check Point 7 : Check Indoor unit Fan rotation

- At the stop operation, turn the fan by hand and check if it rotes.
- Check if it the filter clogged.
- Check if the fan is loose from the shaft.

☆If either fan or bearing is defective, replace it.

Trouble shooting 14 OUTDOOR UNIT Error Method: LOW PRESSURE ERROR	Indicate or Display: Indoor Unit : Operation LED Flash, Timer LED 3 Times Blink 3rd LED 3 Times Blink Outdoor Unit : LED1 Flash, LED2 8 Times Blink ERROR CODE: E:32
Detective Actuators: Pressure SW2 (Lo pressure) OPEN	**Detective details:** Compressor is stopped when pressure SW2 is detected OFF with 3 minutes of starting compressor after the power is turned on.(Low pressure protection) If it becomes 2 times or more, the compressor is stopped, error is indicated, and information is output to the network.

Forecast of Cause:

1. 3 way valve was not open
2. Leak of refrigerant
3. Check around Pressure SW2
4. Check EEV1 operation
5. Check EV - KIT operation
6. Check for Outdoor Unit fan
7. Outdoor TEMP. thermistor
8. Indoor unit Fan relation

Check Point 1 : Check valve opening

☆If the valve was closed, open it and check the condition.

Check Point 2 : Check Out of Gas or Gas Leak of Refrigerant

- Conduct Leak Check at Piping connection.
- Check if the refrigerant amount is proper by measuring Gas pressure.
  (Condensation temp., Refrigerant Pressure Chart) Refer Service manual 8-4-2
- Check Leak portion.
  SEALING TEST
  Charge the piping with nitrogen to the sealing test pressure 600psi (4.15Mpa).
  After 24 hours, check that pressure has not fallen.
  Note: When the ambient temperature changes by 5°C, the test pressure changes about 10psi (0.07Mpa).
  When the refrigerant is recharged, make sure to perform the vacuuming and charge the originally specified amount.

Check Point 3 : Check around Pressure SW 2

- Check removed connection or cable cut off.
- Check around Pressure SW 2 (PARTS INFORMATION 8)

☆Replace Pressure SW2 if it is defective, and check the operating condition.

Check Point 4 : Check Outdoor unit EEV1

- Check around Outdoor unit EEV1 (PARTS INFORMATION 10)

☆If Outdoor unit EEV1 is defective , replace it

Check Point 5 : Check EV - KIT

- Check around EV - KIT (PARTS INFORMATION 11)

☆Replace EV - KIT if it is defective.

Check Point 6 : Check for Outdoor Unit fan

- Check the fan hand and check if it turns normal.
- Check around Outdoor fan motor (Parts Information 7)
- Check if the air flow route of Outdoor unit fan is blocked.

☆If Outdoor fan motor is defective, replace it.

Check Point 7 : Check Indoor unit Fan rotation

- At the stop operation, turn the fan by hand and check if it rotes.
- Check if it the filter clogged.
- Check if the fan is loose from the shaft.

☆If either fan or bearing is defective, replace it.

Check Point 8 : Error detection by defective mounting thermistor or cut off

- Thermistor came off the holder
- Check if the cable is caught in etc,
- Check the thermistor characteristics Trouble shooting 22

☆If the thermistor is abnormal, replace the thermistor

Trouble shooting 15 OUTDOOR UNIT Error Method: PUMP DOWN ERROR (HIGH PRESSURE)	Indicate or Display: Indoor Unit : Operation LED Flash, Timer LED 3 Times Blink 3rd LED 3 Times Blink Outdoor Unit : LED1 Flash, LED2 9 Times Blink ERROR CODE: E:32

Detective Actuators:	Detective details:
Pressure SW1 (Hi pressure) OPEN	During the pump – down operation, the pressure switch 1 becomes OFF (More than 609psi [4.2Mpa] was detected.)

Forecast of Cause:

1. 3 way valve was not open
2. Check around Pressure SW 1
3. Amount of refrigerant
4. Check for Outdoor Unit fan
5. Check EEV1 operation
6. Check EV - KIT operation
7. Check Indoor unit Fan rotation

Check Point 1 : Check valve opening

☆If the valve was closed, open it and check the condition.

Check Point 2 : Check around Pressure SW 1

- Check removed connection or cable cut off.
- Check around Pressure SW 1 (PARTS INFORMATION 8)

☆Replace Pressure SW1 if it is defective, and check the operating condition.

Check Point 3 : Check Out of Refrigerant

- Check if the refrigerant amount is proper by measuring Gas pressure. (Condensation temp., Refrigerant Pressure Chart) Refer Service manual 8-4-2 When the refrigerant is recharged, make sure to perform the vacuuming and charge the originally specified amount.

Check Point 4 : Check for Outdoor Unit fan

- Check the fan hand and check if it turns normal.
- Check around Outdoor fan motor (Parts Information 7)
- Check if the air flow route of Outdoor unit fan is blocked.

☆If Outdoor fan motor is defective, replace it.

Check Point 5 : Check Outdoor unit EEV1

- Check around Outdoor unit EEV1 (PARTS INFORMATION 10)

☆If Outdoor unit EEV1 is defective , replace it

Check Point 6 : Check EV - KIT

- Check around EV - KIT (PARTS INFORMATION 11)

☆Replace EV - KIT if it is defective.

Check Point 7 : Check Indoor unit Fan rotation

- At the stop operation, turn the fan by hand and check if it rotes.
- Check if it the filter clogged.
- Check if the fan is loose from the shaft.

☆If either fan or bearing is defective, replace it.

Trouble shooting 16 **OUTDOOR UNIT Error Method:** PUMP DOWN ERROR (Discharge Temp. Abnormal)	**Indicate or Display:** Indoor Unit : Operation LED Flash, Timer LED 3 Times Blink 3rd LED 3 Times Blink Outdoor Unit : LED1 Flash, LED2 10 Times Blink ERROR CODE: E:32
Detective Actuators: Discharge temperature thermistor	**Detective details:** When discharge temperature sensor detected over 115°C during the pump down operation. Releasing condition : Pump – Down Dip SW On → OFF Pump – Down Complete

Forecast of Cause:

1. Leak of refrigerant
2. Error detection by defective mounting of thermistor or cut off.
3. SV2 operation defective
4. Check for Outdoor Unit fan
5. EEV operation defective
6. EV - KIT operation defective
7. 3 way valve(Gas Side Pipe) was closed

Check Point 1 : Check Out of Gas or Gas Leak of Refrigerant

- Conduct Leak Check at Piping connection.
- Check if the refrigerant amount is proper by measuring Gas pressure.
  (Condensation temp., Refrigerant Pressure Chart) Refer to Service manual 8-4-2
- Check Leak portion.
  SEALING TEST
  Charge the piping with nitrogen to the sealing test pressure (600psi [4.15Mpa]).
  After 24 hours, check that pressure has not fallen.
  Note: When the ambient temperature changes by 5°C, the test pressure changes about 10psi (0.07Mpa).

When the refrigerant is recharged, make sure to perform the vacuuming and charge the originally specified amount.

Check Point 2 : Error detection by defective mounting thermistor or cut off

- Thermistor came off the holder
- Check if the cable is caught in etc,
- Check the thermistor characteristics Trouble shooting 18

☆If the thermistor is abnormal, replace the thermistor

Check Point 3 : SV2 (Bypass valve) operation defective

- Check the connection of SV2 (CN5)of control PCB.
- Check around SV2 (Bypass Valve) (Parts Information 9)

☆If either SV2 or Coil was abnormal, replace it.

Check Point 4 : Check for Outdoor Unit fan, control PCB

- Check the fan hand and check if it turns normal.
- Check around Outdoor fan motor (Parts Information 7)
- Check if the air flow route of Outdoor unit fan is blocked.

☆If Outdoor fan motor is defective, replace it.

Check Point 5 : Check Outdoor unit EEV1

- Check around Outdoor unit EEV1 (PARTS INFORMATION 10)

☆If Outdoor unit EEV1 is defective , replace it

Check Point 6 : Check EV - KIT

- Check around EV - KIT (PARTS INFORMATION 11)

☆Replace EV - KIT if it is defective.

Check Point 7 : Check valve opening

☆If the 3 way valve (Gas pipe side) was closed, open it and check the condition.

Trouble shooting 17 **OUTDOOR UNIT Error Method:** **PUMP DOWN ERROR** **(Others error)**	**Indicate or Display:** **Indoor Unit : Operation LED Flash, Timer LED 3 Times Blink** **3rd LED 3 Times Blink** **Outdoor Unit : LED1 Flash, LED2 11 Times Blink** **ERROR CODE: E:32**
Detective Actuators: By Error output or Protection control	**Detective details:** **Error is output when the protection stop during the pump – down or other error condition is occurred.**

Forecast of Cause: Finish the pump – down and check the error contents by normal operation.

Check Point : Finish the pump - down and check the error contents by normal operation.
・Release the pump – down (Dip SW 1- 3 ON) → and start normal operation .
☆If error occurs during the normal operation, check each error condition.

* Depending on the amount of refrigerant and circumference temperature of a system, it may be unrecoverable.

Trouble shooting 18 **OUTDOOR UNIT Error Method:** **DISCHARGE TEMPERATURE THERMISTOR ERROR**	**Indicate or Display:** Indoor Unit : Operation LED Flash, Timer LED 3 Times Blink 3rd LED 3 Times Blink Outdoor Unit : LED1 Flash, LED3 1 Time Blink ERROR CODE: E:32

Detective Actuators:	**Detective details:**
Discharge temperature Thermistor Open or Short	**When thermistor open or short detected during the compressor is in operation, the compressor stops, indicates error and output the error information to the network.**

Forecast of Cause:

1. Connector wiring defective
2. Thermistor defective
3. Control PCB defective

P/No. 9704219107
(Discharge temperature thermistor)

Check Point 1 : Checking wiring of Connector CN21

- **Loose connector**
- **Incorrect wiring**
- **Thermistor cable is cut off**

☆**When reworking on the loose connector, erroneous connection, keep the power shut off.**

Check Point 2 : Remove CN21, measure the thermistor resistance

Thermistor characteristics (Approx)

Temperature (℃)	0	5	10	15	20	30	40	50	60	70
Resistance Value (kΩ)	176	135	105	81.8	64.5	41.1	26.9	18.1	12.5	8.8

Temperature (℃)	80	90	100	120	140	160	180
Resistance Value (kΩ)	6.3	4.6	3.4	2.0	1.2	0.8	0.5

☆**If its open or short, replace the thermistor and turn on the main power.**

Check Point 3 : Check control PCB CN21 Voltage DC 5.0V

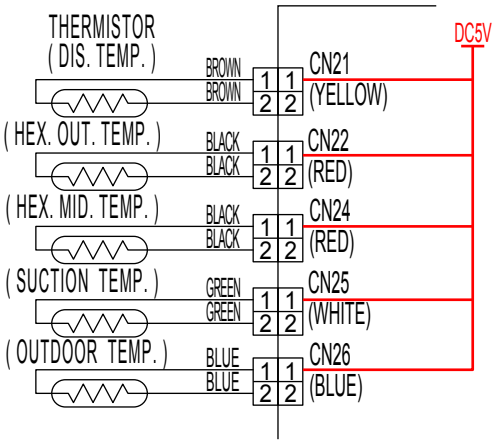

☆**If CN21 voltage can not be measured, replace Control PCB.**

Trouble shooting 19 **OUTDOOR UNIT Error Method:** **HEAT EXCHANGER TEMPERATURE (liquid) THERMISTOR ERROR**	**Indicate or Display:** Indoor Unit : Operation LED Flash, Timer LED 3 Times Blink 3rd LED 3 Times Blink Outdoor Unit : LED1 Flash, LED3 4Times Blink ERROR CODE: E:32
Detective Actuators: **Heat exchanger (liquid) thermistor** Open or Short	**Detective details:** **When thermistor open or short detected during the compressor is in operation, the compressor stops, indicates error and output the error information to the network.**

Forecast of Cause:

1. Connector wiring defective
2. Thermistor defective
3. Control PCB defective

P/No. 9703306037
(Heat exchanger temperature thermistor)

Check Point 1 : Checking wiring of Connector CN22

- **Loose connector**
- **Incorrect wiring**
- **Thermistor cable is cut off**

☆When reworking on the loose connector, erroneous connection, keep the power shut off.

Check Point 2 : Remove CN22, measure the thermistor resistance

Thermistor characteristics (Approx)

Temperature (℃)	-10	-5.0	0	5.0	10	15.0	20	25.0	30
Resistance Value (kΩ)	27.5	20.9	16.1	12.4	9.7	7.7	6.1	4.9	3.9

☆If its open or short, replace the thermistor and turn on the main power.

Check Point 3 : Check control PCB CN22 Voltage DC 5.0V

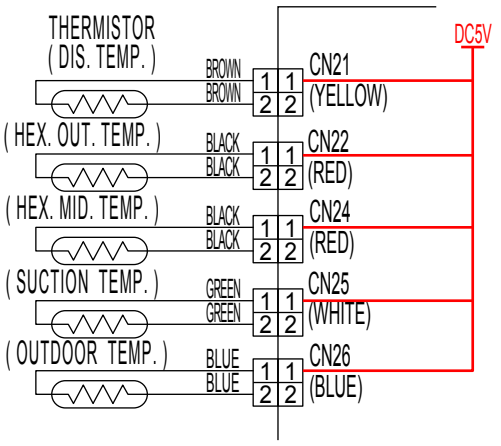

☆If CN22 voltage can not be measured, replace Control PCB.

Trouble shooting 20 **OUTDOOR UNIT Error Method:** **HEAT EXCHANGER TEMPERATURE THERMISTOR (Middle) ERROR**	**Indicate or Display:** Indoor Unit : Operation LED Flash, Timer LED 3 Times Blink 3rd LED 3 Times Blink Outdoor Unit : LED1 Flash, LED3 6Times Blink ERROR CODE: E:32
Detective Actuators: **Heat exchanger (Middle) thermistor Center** Open or Short	**Detective details:** **When thermistor open or short detected during the compressor is in operation, the compressor stops, indicates error and output the error information to the network.**

Forecast of Cause:

1. Connector wiring defective
2. Thermistor defective
3. Control PCB defective

P/No. 9900193010
(Heat exchanger temperature thermistor center)

Check Point 1 : Checking wiring of Connector CN24

- **Loose connector**
- **Incorrect wiring**
- **Thermistor cable is cut off**

☆When reworking on the loose connector, erroneous connection, keep the power shut off.

Check Point 2 : Remove CN24, measure the thermistor resistance

Thermistor characteristics (Approx)

Temperature (℃)	-10	-5.0	0	5.0	10	15.0	20	25.0	30
Resistance Value (kΩ)	27.5	20.9	16.1	12.4	9.7	7.7	6.1	4.9	3.9

☆If its open or short, replace the thermistor and turn on the main power.

Check Point 3 : Check control PCB CN24 Voltage DC 5.0V

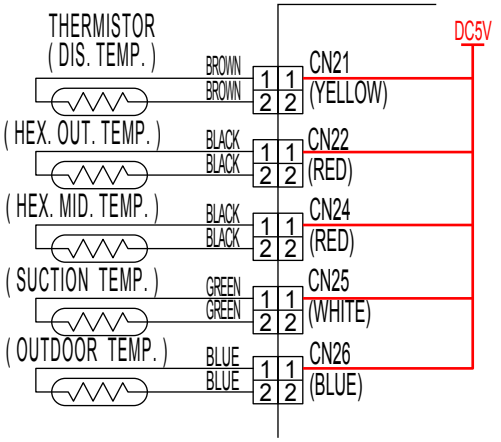

☆If CN24 voltage can not be measured, replace Control PCB.

Trouble shooting 21 **OUTDOOR UNIT Error Method:** SUNCTION TEMPERATURE TERMISTOR ERROR	**Indicate or Display:** Indoor Unit : Operation LED Flash, Timer LED 3 Times Blink 3rd LED 3 Times Blink Outdoor Unit : LED1 Flash, LED3 10Times Blink ERROR CODE: E:32
Detective Actuators: Suction temperature thermistor Open or Short	**Detective details:** When thermistor open or short detected during the compressor is in operation, the compressor stops, indicates error and output the error information to the network.

Forecast of Cause:

1. Connector wiring defective
2. Thermistor defective
3. Control PCB defective

P/No. 9900192013
(Suction temperature thermistor)

Check Point 1 : Checking wiring of Connector CN25

- Loose connector
- Incorrect wiring
- Thermistor cable is cut off

☆When reworking on the loose connector, erroneous connection, keep the power shut off.

Check Point 2 : Remove CN25, measure the thermistor resistance

Thermistor characteristics (Approx)

Temperature (℃)	-10	-5.0	0	5.0	10	15.0	20	25.0	30
Resistance Value (kΩ)	27.5	20.9	16.1	12.4	9.7	7.7	6.1	4.9	3.9

☆If its open or short, replace the thermistor and turn on the main power.

Check Point 3 : Check control PCB CN25 Voltage DC 5.0V

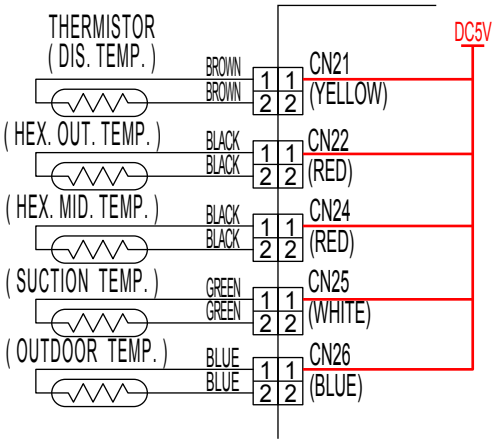

☆If CN25 voltage can not be measured, replace Control PCB.

Trouble shooting 22 **OUTDOOR UNIT Error Method:** **OUTDOOR TEMPERATURE THERMISTOR ERROR**	**Indicate or Display:** Indoor Unit : Operation LED Flash, Timer LED 3 Times Blink 3rd LED 3 Times Blink Outdoor Unit : LED1 Flash, LED3 11Times Blink ERROR CODE: E:32

Detective Actuators:	**Detective details:**
Outdoor temperature thermistor Open or Short	**When thermistor open or short detected during the compressor is in operation, the compressor stops, indicates error and output the error information to the network.**

Forecast of Cause:

1. Connector wiring defective
2. Thermistor defective
3. Control PCB defective

P/No. 9900378035
(Outdoor temperature thermistor)

Check Point 1 : Checking wiring of Connector CN26

- **Loose connector**
- **Incorrect wiring**
- **Thermistor cable is cut off**

☆When reworking on the loose connector, erroneous connection, keep the power shut off.

Check Point 2 : Remove CN26, measure the thermistor resistance

Thermistor characteristics (Approx)

Temperature (℃)	-20	-10	-5	0	5	10	15	20	30	40
Resistance Value (kΩ)	105	58.2	44.0	33.6	25.9	20.2	15.8	12.5	8.0	5.3

Temperature (℃)	50	60	70
Resistance Value (kΩ)	3.6	2.5	1.8

☆If its open or short, replace the thermistor and turn on the main power.

Check Point 3 : Check control PCB CN26 Voltage DC 5.0V

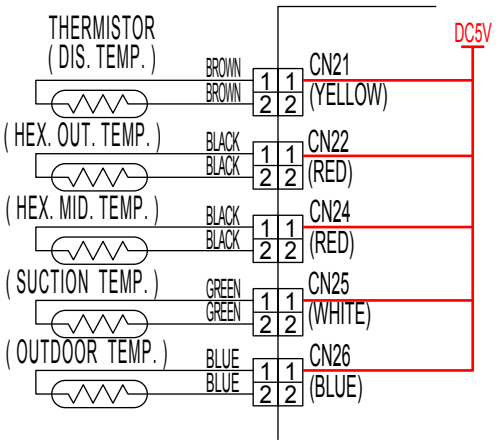

☆If CN26 voltage can not be measured, replace Control PCB.

Trouble shooting 23 OUTDOOR UNIT Error Method: PRESSURE SW1 (Hi) ERROR	Indicate or Display: Indoor Unit : Operation LED Flash, Timer LED 3 Times Blink 3rd LED 3 Times Blink Outdoor Unit : LED1 Flash, LED4 1Time Blink ERROR CODE: E:32
Detective Actuators: Pressure SW 1 (Hi) OPEN	**Detective details:** When Pressure SW1 became OFF (OPEN) at the power ON.

Forecast of Cause:

1. Pressure SW 1 Defective
2. Control PCB defective

Check Point 1 : Check around Pressure SW
・Check loose connector or cut off cable ・Check around Pressure SW1(PARTS INFORMATION 8)
☆If Pressure SW1 is defective, replace it and check the operation condition and the pressure when it is in operation

Check Point 1 : Check of Control PCB
・Check if Pressure SW1 circuit is OPEN at Control PCB side.(Check if there is a cut of pattern due to Corrosion of PCB, the cut off pattern, or any soldering defect at the connector)
☆Replace Control PCB if it is defective (When DIP SW is changed, setup DIP SW again)

Trouble shooting 24 OUTDOOR UNIT Error Method: PRESSURE SW2 (Low) ERROR	Indicate or Display: Indoor Unit : Operation LED Flash, Timer LED 3 Times Blink 3rd LED 3 Times Blink Outdoor Unit : LED1 Flash, LED4 2Time Blink ERROR CODE: E:32
Detective Actuators: Pressure SW 2 (Low) OPEN	**Detective details:** When Pressure SW2 became OFF (OPEN) at the power ON.

Estimated details :

1. Pressure SW 1 Defective
2. Control PCB defective

Check Point 1 : Check around Pressure SW
・Check loose connector or cut off cable ・Check around Pressure SW1(PARTS INFORMATION 8)
☆If Pressure SW1 is defective, replace it and check the operation condition and the pressure when it is in operation

Check Point 2 : Check of Control PCB
・Check if Pressure SW1 circuit is OPEN at Control PCB side.(Check if there is a cut of pattern due to Corrosion of PCB, the cut off pattern, or any soldering defect at the connector)
☆Replace Control PCB if it is defective (When DIP SW is changed, setup DIP SW again)

Trouble shooting 25 **OUTDOOR UNIT Error Method:** **COMPRESSOR ROTOR LOCATION DETECTION ERROR**	**Indicate or Display:** **Indoor Unit : Operation LED Flash, Timer LED 3 Times Blink** **3rd LED 3 Times Blink** **Outdoor Unit : LED1 Flash, LED4 4 Times Blink** **ERROR CODE: E:32**
Detective Actuators: Control PCB detection circuit	**Detective details:** **When the location error of compressor is detected,the compressor is stopped.(Abnormal Stop) It restarts upon the balance pressure control (3 min.ST), and if the location error is detected with in 40 seconds again, it stop again. If it is repeated for 4 Times (5th time abnormal stop), the compressor becomes permanent stop. Then LED indicates Error and the error information is output to the network**

Forecast of Cause:

1. Connection of electrical parts
2. Compressor defective
3. TR PCB ASSY defective
4. Check Control PCB

Check Point 1 : Check the electrical parts connection

- **Check the connection of CN15,16 between TR PCB ASSY and Control PCB**
- **Check if incorrect wiring is done at the U,V,W terminal between TR PCB ASSY and Compressor**

☆If abnormal connection is found, correct the connection.

Check Point 2 : Check Compressor

·Check motor Coil

1.Check the continuity between each terminals of coil U, V, W (resistance value : 0.187Ω)

2.Check if there is a cut off between each terminals of U,V,W

☆If the resistance value is abnormal or open, the compressor is defective

Check Point 3 : Diagnosis of TR PCB ASSY

1.If error appears during the compressor running, check if each voltage between U – V,V – W, W – U are output in a good valance. If the voltage value comparison between each terminal is abnormal when the rotation frequency is constant, replace TR PCB ASSY.

2. Check TR ASSY(Judgment of Transistor module)

Check the continuity by removing each terminal cable.

Replace TR ASSY if it is abnormal.(Compare with the table on right)

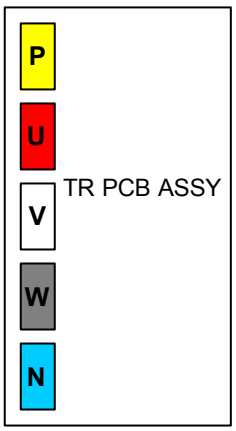

Outdoor unit grille side

(+),(-) shows the terminal of the meter

Simple confirm method for digital meter.

Multimeter		Resistance value
–	+	1M Ohm or greater
P	U	
	V	
	W	
U	N	
V		
W		

The resistance value is changes in a type of the tester (Digital or Analogue) and internal resistance.

Confirm method for analog meter.

P / N TERMINAL	COMP TERMINAL	Normal resistance value
P (+)	U (–)	14～15Ω
	V (–)	
	W (–)	
P (–)	U (+)	∞Ω
	V (+)	
	W (+)	
N (+)	U (–)	∞Ω
	V (–)	
	W (–)	
N (–)	U (+)	14～15Ω
	V (+)	
	W (+)	

Check Point 3 : Check Control PCB (Location Detector Circuit)

Remove CN14 connector on Control PCB, and check the voltage DC5.0V between 1-2.

☆Replace Control PCB if the voltage is 0V.

Trouble shooting 26 **OUTDOOR UNIT Error Method:** ELECTRIC CURRENT TRIP ERROR	**Indicate or Display:** Indoor Unit : Operation LED Flash, Timer LED 3 Times Blink 3rd LED 3 Times Blink Outdoor Unit : LED1 Flash, LED4 5 Time Blink ERROR CODE: E:32

Detective Actuators: Detection circuit in Control PCB detects the abnormal condition of TR PCB ASSY	**Detective details:** When more than normal operating current to IPM flows during Outdoor unit is turned ON,the compressor stops. After that, if the same operation is repeated for 4 times continuously at the time of restarting compressor by 3 ST (5th tripping stop), the compressor becomes a permanent stop. Then LED indicates error and output the error information to the network.

Forecast of Cause:

1. Check the electrical parts
2. TR PCB ASSY / Control PCB defective
3. Check Compressor

Check Point 1 : Check the electrical parts connection

- Check if each electrical parts are correctly connected.
- Check if any connection mistake or erroneous connection of connector.

☆Correct the connection mistake or erroneous connection of connector.
☆Replace TR PCB ASSY if there is an abnormal condition found.

Check Point 3 : Diagnosis of TR PCB ASSY

1.If error appears during the compressor running, check if each voltage between U – V,V – W, W – U are output in a good valance. If the voltage value comparison between each terminal is abnormal when the rotation frequency is constant, replace TR PCB ASSY.

2. Check TR ASSY(Judgment of Transistor module)
Check the continuity by removing each terminal cable.
Replace TR ASSY if it is abnormal.(Compare with the table on right)

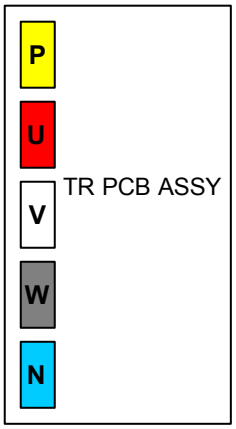

Outdoor unit grille side

(+),(-) shows the terminal of the meter

Simple confirm method for digital meter.

Multimeter		Resistance value
–	+	
P	U	1M Ohm or greater
	V	
	W	
U	N	
V		
W		

The resistance value is changes in a type of the tester (Digital or Analogue) and internal resistance.

Confirm method for analog meter.

P / N TERMINAL	COMP TERMINAL	Normal resistance value
P (+)	U (–)	14～15Ω
	V (–)	
	W (–)	
P (–)	U (+)	∞Ω
	V (+)	
	W (+)	
N (+)	U (–)	∞Ω
	V (–)	
	W (–)	
N (–)	U (+)	14～15Ω
	V (+)	
	W (+)	

Check Point 3 : Check Compressor

- Check the shortage between each U,V,W terminal and the main unit.
  →If it is shorted, the compressor is defective
- Check the cut off between each U,V,W terminal.
  →If it is open, the compressor is defective.

Caution When the Compressor is defective

If the defect was due to oil leakage, check if there is any leak at the piping.

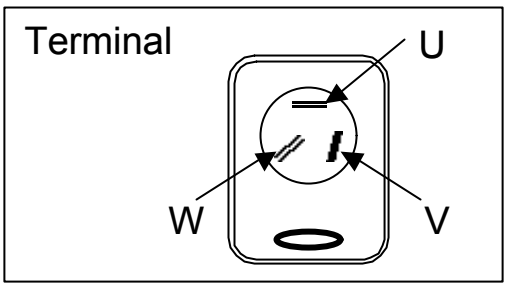

Trouble shooting 27 **OUTDOOR UNIT Error Method:** CT ERROR	**Indicate or Display:** Indoor Unit : Operation LED Flash, Timer LED 3 Times Blink 3rd LED 3 Times Blink Outdoor Unit : LED1 Flash, LED4 6 Time Blink ERROR CODE: E:32

Detective Actuators: Ct abnormal of Power PCB is detected by Control PCB detection circuit	**Detective details:** **When the compressor speed become more than 50 Hz after the start up, the compressor stops if Outdoor unit current (Compressor current) becomes less than 8.0A that was detected by the input current sensor (CT). If this operation occurs 2 times continuously, the compressor becomes permanent stop.** **Then LED indicates error, and the error information is output to the network.**

Forecast of Cause:

1. Connection electrical parts
2. Power PCB (CT) defective
3. Diode bridge defective
4. Reactor (Coil) is open or short to other circuit
5. Check TR PCB ASSY

Check Point 1 : Check connection electrical parts

- **Check if any incorrect wiring at connectors of electrical parts**
- **Check the cable wiring between Filter PCB and Control PCB (CN 202-CN11)**

☆Correct the connection mistake or erroneous connection of connector.

Check Point 2 : Check Power PCB (CT)

- **Remove connector CN11 and check the resistance at both terminals (560ohm).**

☆If it is not possible to check the resistance value, replace Power PCB

Check Point 3 : Check Diode bridge

- **Remove the connector and measure the resistance value at each terminal by following procedure. Check Diode bridge (PARTS INFORMATION 3)**

Check Point 4 : Check Reactor (Coil)

- **Remove the connector and check if each terminal is open or if there is a short circuit in the electrical box.**

Check Point 3 : Diagnosis of TR PCB ASSY

1.If error appears during the compressor running, check if each voltage between U – V,V – W, W – U are output in a good valance. If the voltage value comparison between each terminal is abnormal when the rotation frequency is constant, replace TR PCB ASSY.

2. Check TR ASSY(Judgment of Transistor module)
Check the continuity by removing each terminal cable.
Replace TR ASSY if it is abnormal.(Compare with the table on right)

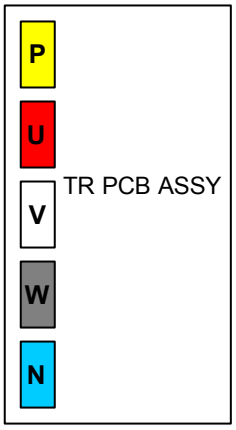

Outdoor unit grille side

(+),(-) shows the terminal of the meter

Simple confirm method for digital meter.

Multimeter		Resistance value
–	+	1M Ohm or greater
P	U	
	V	
	W	
U	N	
V		
W		

The resistance value is changes in a type of the tester (Digital or Analogue) and internal resistance.

Confirm method for analog meter.

P / N TERMINAL	COMP TERMINAL	Normal resistance value
P (+)	U (–)	14～15Ω
	V (–)	
	W (–)	
P (–)	U (+)	∞Ω
	V (+)	
	W (+)	
N (+)	U (–)	∞Ω
	V (–)	
	W (–)	
N (–)	U (+)	14～15Ω
	V (+)	
	W (+)	

Trouble shooting 28 **OUTDOOR UNIT Error Method:** **TRIP TERMINAL L ERROR**	**Indicate or Display:** **Indoor Unit : Operation LED Flash, Timer LED 3 Times Blink** **3rd LED 3 Times Blink** **Outdoor Unit : LED1 Flash, LED4 9 Time Blink** **ERROR CODE: E:32**

Detective Actuators:	**Detective details:**
Abnormal condition of TR PCB ASSY is monitored by Control PCB detector circuit.	**When Trip terminal inside IPM Module becomes Lo At the compressor start - up, it is judged as a start - up error. LED indicates error and outputs and the error information to the network.**

Forecast of Cause:
1. Connection of electrical parts
2. TR PCB ASSY / control PCB defective
3. Check Compressor

Check Point 1 : Connection of electrical parts

- **Check if each electrical parts are connected correctly.**
- **Check if Connector CN14 between TR PCB ASSY and control PCB.**
- **Check if TR PCB ASSY has a corrosion or shorted mark.**

☆Rework if connector is incorrectly wired, or loose.
☆Replace TR PCB ASSY if any abnormal condition is found on PCB.

Check Point 2 : Diagnosis of Control PCB / TR PCB ASSY

1.Check the supply voltage from Control PCB to IPM
Check DC+15.0V between terminal 1 - 2 of main PCB CN16 (IPM Power supply)
If the voltage does not appear,replace Control PCB

2.Check the voltage at Trip Terminal (To Check TR PCB)
Remove the connector CN14 between TR PCB ASSY - Control PCB.
Check DC+5V between terminal 1 - 2 ,2 - 3 of CN14 (Connector side)

3.Check TR PCB ASSY (Check Transistor Module).
Remove the cable from each terminal and check the continuity.
If any abnormal condition is found, replace TR PCB ASSY.

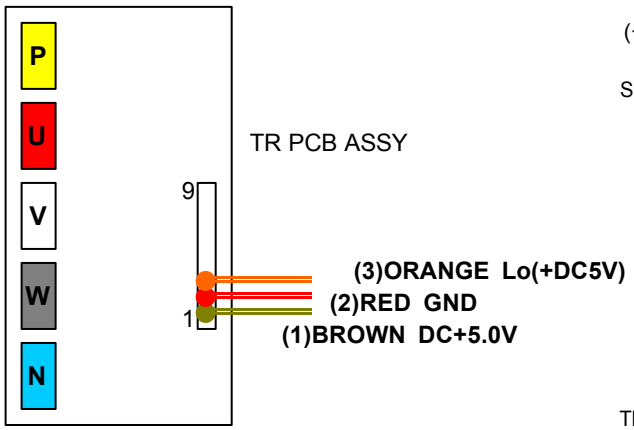

(+),(-) shows the terminal of the meter

Simple confirm method for digital meter.

Multimeter		Resistance value
−	+	1M Ohm or greater
P	U	
	V	
	W	
U	N	
V		
W		

The resistance value is changes in a type of the tester (Digital or Analogue) and internal resistance.

Confirm method for analog meter.

P / N TERMINAL	COMP TERMINAL	Normal resistance value
P (+)	U (−)	14～15Ω
	V (−)	
	W (−)	
P (−)	U (+)	∞Ω
	V (+)	
	W (+)	
N (+)	U (−)	∞Ω
	V (−)	
	W (−)	
N (−)	U (+)	14～15Ω
	V (+)	
	W (+)	

Check Point 3 : Check Compressor

- **Check the shortage between each U,V,W terminal and the main unit.**
  →If it is shorted, the compressor is defective
- **Check the cut off between each U,V,W terminal.**
  →If it is open, the compressor is defective.

Trouble shooting 29 OUTDOOR UNIT Error Method: POWER SOUCE FREQUENCY ERROR	Indicate or Display: Indoor Unit : Operation LED Flash, Timer LED 3 Times Blink 3rd LED 3 Times Blink Outdoor Unit : LED1 Flash, LED5 2 Time Blink ERROR CODE: E:32
Detective Actuators: Power PCB circuit	**Detective details:** **When the power frequency which is supplied to Out door Unit detects lower than 45Hz or higher than 65Hz for more than 1minute at power ON, the error condition is output.**

Forecast of Cause:

External cause

- Incorrect wiring or connection of connection power cable.
- AC power voltage is out of specification. Noise Interference.
- If the connection cable other than specified one was used.

Inter cause (Unit)

- Power PCB defective

Check Point : Check the installation work

- **Check Cable / Breaker**
- **Check if any loose connection or removal of cable.**

Use		Wire size [cross-section (mm^2)]	Remark
Power supply cable	Outdoor unit	5.0 to 8.0	H07RN-F or equivalent, Single-phase, 50HZ, 220-240V, 2Wire + Ground
Connection cable	Indoor unit	≧ 2.5	H07RN-F or equivalent, Single-phase, 50HZ, 220-240V, 3Wire + Ground
		≧ 1.5 (If total wire length < 50 m)	
Circuit breaker		30 (A)	

Follow the installation Manual if any installation failure is found.

Check Point : Check Power supply

- **Check external cause (Power supply)**
- **Instant Drop・・・Check if there is an electric equipment with a large load in the same circuit.**
- **Instant Power Outage・・・Check if there is a defective contact or leakage in the power supply.**
- **Noise・・・・Check if there is any equipment that cause the harmonic wave near the power line.**
  (Neon tube or Electric equipment that harmonic wave Check that the grounding is completely insulated.)

Trouble shooting 30 OUTDOOR UNIT Error Method: EEPROM ERROR	Indicate or Display: Indoor Unit : Operation LED Flash, Timer LED 3 Times Blink 3rd LED 3 Times Blink Outdoor Unit : LED1 Flash, LED5 3 Time Blink ERROR CODE: E:32

Detective Actuators:	Detective details:
Outdoor unit Control PCB	**When the access to the external memory (EEPROM) is failed due to some cause (External Noise, defective component,etc.) upon Outdoor Unit start – up. After the error occurred, the operation of Outdoor unit is not limited.**

Forecast of Cause:

1.Relation of installation construction
- 1) Use of specified material
- 2) Power supply circuit (voltage drop/ Noise etc.)

2. Relation of unit
- 1) Check the Power POWER CORD
- 2) Check Control PCB(Component failure)

Check Point 1-1 : Check the installation work

- **Check Cable / Breaker**
- **Check if any loose connection or removal of cable.**

Use		Wire size [cross-section (mm^2)]	Remark
Power supply cable	Outdoor unit	5.0 to 8.0	H07RN-F or equivalent, Single-phase, 50HZ, 220-240V, 2Wire + Ground
Connection cable	Indoor unit	≧ 2.5	H07RN-F or equivalent, Single-phase, 50HZ, 220-240V, 3Wire + Ground
		≧ 1.5 (If total wire length < 50 m)	
Circuit breaker		30 (A)	

Follow the installation Manual if any installation failure is found.

Check Point 1-2 : Check Power supply

- **Check external cause (Power supply)**
- **Instant Drop ・・・Check if there is an electric equipment with a large load in the same circuit.**
- **Instant Power Outage ・・・Check if there is a defective contact or leakage in the power supply.**
- **Noise・・・・Check if there is any equipment that cause the harmonic wave near the power line.**
  (Neon tube or Electric equipment that harmonic wave Check that the grounding is completely insulated.)

Check Point 2-1 : Check Power cord Connection

1)Check the supply voltage AC220～240V between (L1) and (L2)

If AC does not appear, check the circuit at power supply side.

2)Check the wiring of connection cable (incorrect wiring / loose connection, etc.)

If there is incorrect or loose wiring, turn off the breaker and conduct rework.

Check Point 2-2 : Check Outdoor Unit electrical components.

- **Check connection, removal and incorrect wiring of all the connectors.**
- **Check if any shorted mark or corrosion on PCB**

☆When Control PCB is defective, replace it.(If Dip SW was changed conduct resetting DIP SW.)

Trouble shooting 31 **OUTDOOR UNIT Error Method:** MICROCOMPUTERS COMMUNICATION ERROR	**Indicate or Display:** Indoor Unit : Operation LED Flash, Timer LED 3 Times Blink 3rd LED 3 Times Blink Outdoor Unit : LED1 Flash, LED5 7 Time Blink ERROR CODE: E:32

Detective Actuators: Outdoor unit Control PCB	**Detective details:** When the communication with the Micon(Main Micon – Sub Micon) is failed (for 5 time try), it outputs Communication Error with Micon. When Communication Error with Micon occurs at the compressor start – up, the compressor stops in 10 seconds, LED indicates error, and output the error inform ation to the network.

Forecast of Cause:

1.Relation of installation construction
- 1) Use of specified material
- 2) Power supply circuit (voltage drop/ Noise etc.)

2. Relation of unit
- 1) Check the Power POWER CORD
- 2) Check Control PCB(Component failure)

Check Point 1-1 : Check the installation work

- **Check Cable / Breaker**
- **Check if any loose connection or removal of cable.**

Use		Wire size [cross-section (mm^2)]	Remark
Power supply cable	Outdoor unit	5.0 to 8.0	H07RN-F or equivalent, Single-phase, 50HZ, 220-240V, 2Wire + Ground
Connection cable	Indoor unit	≧ 2.5	H07RN-F or equivalent, Single-phase, 50HZ, 220-240V, 3Wire + Ground
		≧ 1.5 (If total wire length < 50 m)	
Circuit breaker		30 (A)	

Follow the installation Manual if any installation failure is found.

Check Point 1-2 : Check Power supply

- **Check external cause (Power supply)**
- **Instant Drop ・・・Check if there is an electric equipment with a large load in the same circuit.**
- **Instant Power Outage ・・・Check if there is a defective contact or leakage in the power supply.**
- **Noise ・・・・Check if there is any equipment that cause the harmonic wave near the power line.**
  (Neon tube or Electric equipment that harmonic wave Check that the grounding is completely insulated.)

Check Point 2-1 : Check Power cord Connection

1)Check the supply voltage AC220～240V between (L1) and (L2)

If AC does not appear, check the circuit at power supply side.

2)Check the wiring of connection cable (incorrect wiring / loose connection, etc.)

If there is incorrect or loose wiring, turn off the breaker and conduct rework.

Check Point 2-2 : Check Outdoor Unit electrical components.

- **Check connection, removal and incorrect wiring of all the connectors.**
- **Check if any shorted mark or corrosion on PCB**

☆When Control PCB is defective, replace it.(If Dip SW was changed conduct resetting DIP SW.)

Trouble shooting 32 **OUTDOOR UNIT Error Method:** NET WORK COMMUNICATION ERROR	**Indicate or Display:** Indoor Unit : Operation LED Flash, Timer LED 3 Times Blink 3rd LED 3 Times Blink Outdoor Unit : LED1 Flash, LED5 8 Time Blink ERROR CODE: E:32
Detective Actuators: Outdoor unit Control PCB	**Detective details:** (A) When the signal from Indoor unit could not received for about 20 seconds after turning on the power, LED indicates error. (B) During the normal operation, if the control information from Indoor unit that is recognized by Outdoor unit could not received for more than 20 seconds, LED indicates error.

Forecast of Cause:

- Connection cable between Outdoor unit – Indoor unit
- Blow up Fuse
- Incorrect Connector of Unit
- Address setting operation does not complete

Check Point : Check the Connection between Outdoor unit - Indoor unit

- **Check the wiring of the connection cable.** **Following connection method is NOT allowed.**

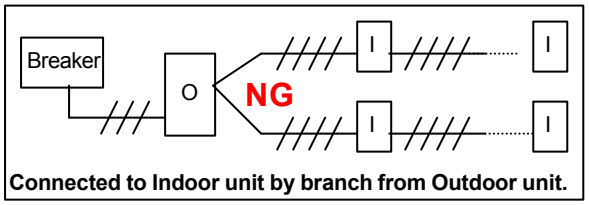

Connected to Indoor unit by branch from Outdoor unit.

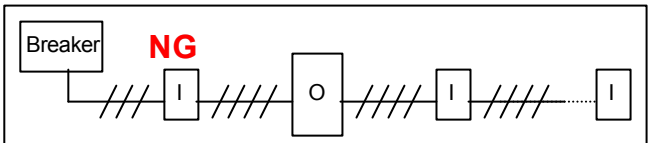

Indoor unit is connected between the commercial power source and Outdoor unit

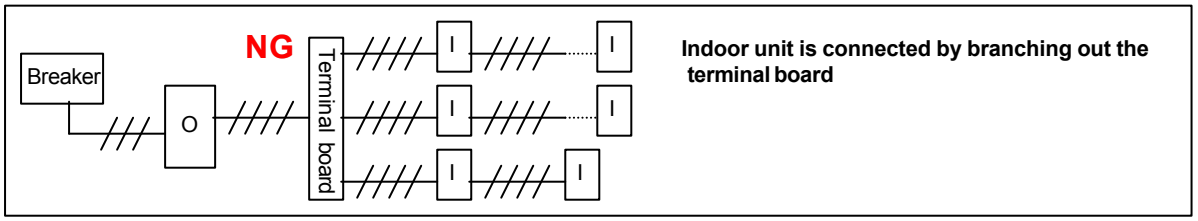

Indoor unit is connected by branching out the terminal board

Check Point : Check incorrect wiring or connection of the connection cable between Outdoor unit - Indoor unit

Incorrect Wiring 1

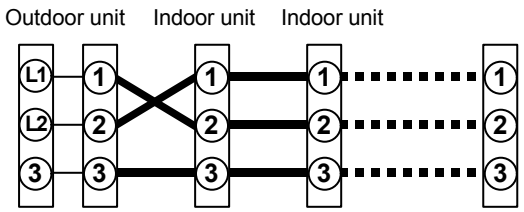

※Fuse in Outdoor unit or Indoor unit will blow up

Incorrect Wiring 2

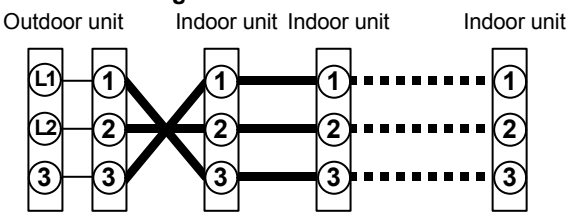

※Fuse in Outdoor unit or Indoor unit will blow up

Incorrect Wiring 3

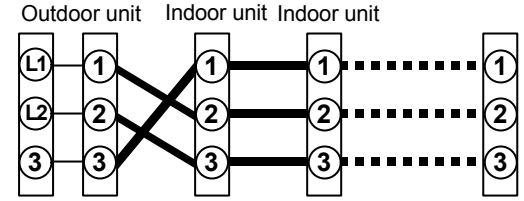

※Fuse in Outdoor unit or Indoor unit will blow up

Incorrect Wiring 4

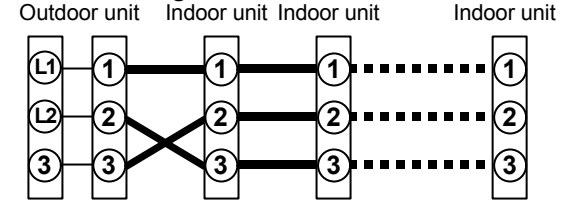

※ Fuse in Outdoor unit or Indoor unit will blow up

Check Point : Check the wiring of connector / terminal

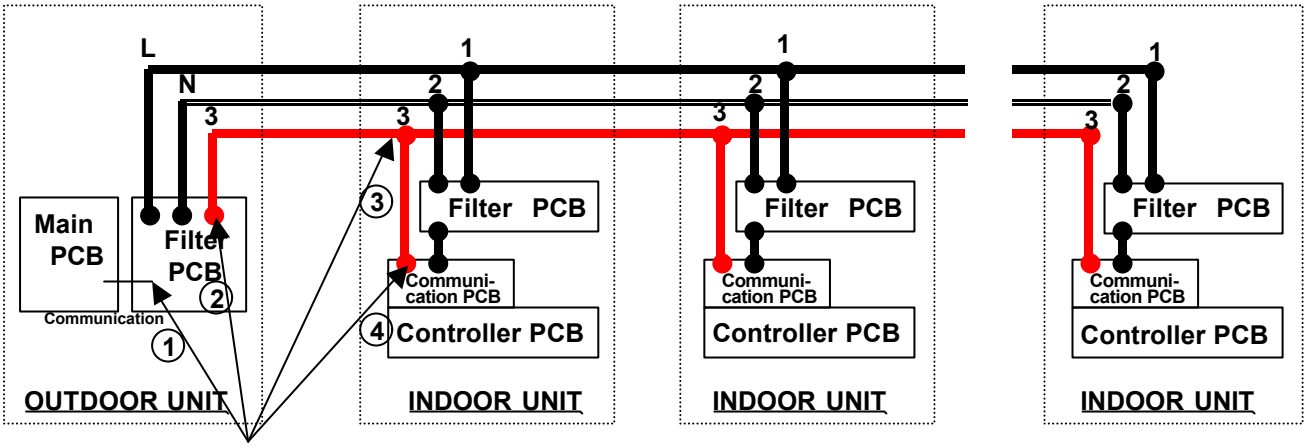

1.Check the wiring of Out door Unit Power PCB CN201 (Communication connector)
2.Check the wiring of Outdoor Unit Power PCB TM 203 (RED), and check FUSE (F202)
3.Check the wiring of Indoor Unit terminal
4.Check the wiring of Indoor Unit Communication PCB and FUSE (F401)

Check Point : Check Address Setting operation

1. Power supply ON
2. Each Indoor Unit Address setting operation
3. Power supply OFF
4. Power supply ON

Address setting complete.

6-5-3 TROUBLE SHOOTING FOR OPTIONAL PARTS

External Switch Controller (UTR-YESA)

Error Contents :	**Symptom :**
Power Supply Error	**No operation & LED does not light up.**

Condition :

1. No power supply.
Voltage error between red and black terminals of External Switch Controller. (Normal voltage: 12V plus minus 10%)
2. Electric circuit error.
Voltage is normal between red and black terminals of External Switch Controller (Normal voltage: 12V plus minus 10%)

Cause 1 : Indoor unit defective

- ☐ Refer to Indoor unit trouble shooting.

↓ **OK**

Cause 2 : Connection cable is defective or open.

- ☐ Check installation of connection cable.
- ☐ Check if connection cable is open.

OK →

Cause 3 : Defective insertion or open connection of the cable between External Switch Controller terminal and PCB.

- ☐ Check connector insertion.
- ☐ Check if connection cable is open.

↓ **OK**

Cause 4 : Ext. Switch Controller is defective.

- ▶ **Replace External Switch Controller.**

Error Contents :	**Symptom :**
The abnormality in connection of remote controller cable	**LED repeats flashing 0.5sec ON & 0.5sec OFF.**

Condition :

Communication with Indoor unit has been cut off for longer than 1 minute.

Cause 1 : Communication cable is defective or open.

- ☐ Check installation of connection cable.
- ☐ Check if connection cable is open.

↓ **OK**

Cause 2 : Defective insertion or open connection of the cable between External Switch Controller terminal and PCB.

- ☐ Check connector insertion.
- ☐ Check if connection cable is open.

↓ **OK**

Cause 3 : DIP switch setting defective

- ☐ Check setting of DIP-SW1-4, 1-5, 1-6.

OK →

Cause 4 : External noise

- ☐ Remove or shut out external noise source.

↓ **OK**

Cause 5 : Ext. Switch Controller is defective.

- ▶ **Replace External Switch Controller.**

Error Contents : **Transmission Error**	**Symptom :** **LED repeats flashing 0.5sec ON & 1.0sec OFF.**

Condition :
Normal communication with Indoor unit has been suspended for longer than 1 minute.

Cause 1 : DIP switch setting defective
- ☐ Check setting of DIP-SW1-4, 1-5, 1-6.

↓ **OK**

Cause 2 : External noise
- ☐ Remove or shut out external noise source.

→ **OK**

Cause 3 : Ext. Switch Controller is defective.
- ▶ **Replace External Switch Controller.**

Error Contents : **Switch Operation Error**	**Symptom :** **LED is lighting but Switch (SW1 or SW2) does not operate.**

Condition :
Switch input can not be detected.

Cause 1 : Connection cable is defective or open.
- ☐ Check installation of connection cable.
- ☐ Check if connection cable is open.

↓ **OK**

Cause 2 : Defective insertion or open connection of the cable between External Switch Controller terminal and PCB.
- ☐ Check connector insertion.
- ☐ Check if connection cable is open.

↓ **OK**

Cause 3 : DIP switch setting defective
- ☐ Check DIP Switch setting.

→ **OK**

Cause 4 : External Switch is defective

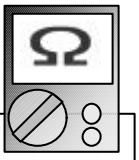

- ☐ Check any short or switch operation failure.
- ☐ Check resistance value between the terminals, at the time of input.
- ▶ **OPEN** : More than 50 kΩ
- ▶ **SHORT :** Less than 1 kΩ

↓ **OK**

Cause 5 : Ext. Switch Controller is defective.
- ▶ **Replace External Switch Controller.**

Group Remote Controller (UTB-YDB)

Error Contents : **Communication Error**	**Symptom :** **Error Code display [1F]** **OPERATION LED is flashing.**

Details :

Condition of occurrence :

When the signal is cut off for more than 90 seconds from the registered Indoor unit (including Slave unit) and Outdoor unit.

Release condition : 1. The signal has been received from the Indoor & Outdoor units that was creating the error.

2. MPU has been booted up. (Release from the reset operation, the power failure stand-by operation.

Cause 1 : Connection failure

- ☐ Check transmission cable
- ☐ Check disconnected power line for Indoor and Outdoor unit.
- ☐ Check if converter power line is disconnected.

↓ **OK**

Cause 2 : Check outside cause (Voltage drop or noise, etc.)

- Instant drop ----- Check if there is a large load electric apparatus in the same circuit.
- Momentary power failure ----- Check if there is a defective contact or leak current in the power supply circuit.
- Noise ----- Check if there is any equipment causing harmonic wave near electric line (Neon bulb or electric equipment that may cause harmonic wave).

↓ **OK**

Cause 3 : Remote Controller is defective.

▶ **Replace Group Remote Controller.**

Error Contents : **PCB Error**	**Symptom :** **Error Code display [03]** **OPERATION LED is flashing.**

Details :

Condition of occurrence : When EEPROM can not be written, or the control port does not operate.

Release condition : Power is reset.

Cause 1 : Remote Controller is defective.

▶ **Replace Group Remote Controller.**

Error Contents : **Connection Error**	**Symptom :** **Error Code display [1C]** **OPERATION LED is flashing.**

Details :

Condition of occurrence :

The valid signal has not been received from the converter more than 90 seconds after the communication line became valid.

Release condition : Valid signal is received from Converter.

Cause 1 : Connection failure

- ☐ Check power to the converter.
- ☐ Check connection of remote control line between controller and converter.

↓ **OK**

Cause 2 : Check outside cause (Voltage drop or noise, etc.)

- Instant drop ----- Check if there is a large load electric apparatus in the same circuit.
- Momentary power failure ----- Check if there is a defective contact or leak current in the power supply circuit.
- Noise ----- Check if there is any equipment causing harmonic wave near electric line (Neon bulb or electric equipment that may cause harmonic wave).

↓ **OK**

Cause 3 : Remote Controller is defective.

- ▶ **Replace Group Remote Controller.**

Error Contents : **Address Setting Error**	**Symptom :** **Error Code display [1A]** **OPERATION LED is flashing.**

Details :

Condition of occurrence :

1. No Indoor unit is registered.
2. Refrigerant system, System type value, etc. of the registered Indoor units are outside the setting range.

(Ex. Refrigerant system address is bigger than 100. Etc.)

Release condition :

1. The key to enter the function selection process is pressed.
   DAY key and PROGRAM key (CLOCK ADJUST key) are simultaneously kept pressed.
2. It automatically initializes by itself. After that, it is released by pressing the key to enter the function selection process.

Cause 1 : Setting failure

- ☐ Register Indoor units again by entering to the function selection mode.
  (Keep pressing DAY key and PROGRAM key (CLOCK ADJUST key).
  (Refer to the installation manual for the remote controller.)

Error Contents : **System Error**	**Symptom :** **Error Code display [1d]** **OPERATION LED is flashing.**

Details :

Condition of occurrence :

1. Only the slave unit is registered. (Main unit is not registered.)
2. Indoor unit which is not existing was registered.

Release condition : Registered contents have been changed by SELECT key, DAY key, Timer Mode key (DELETE key).

Cause 1 : Setting failure

- ☐ Recheck the registered contents. (Register the main unit.)
- ☐ Check Indoor unit DIP-SW, R-SW.

↓ **OK**

Cause 2 : Connection failure

- ☐ Check transmission cable
- ☐ Check if Indoor or Outdoor unit power line is disconnected.
- ☐ Check if the converter power line is disconnected.
- ☐ Check connection between controller and the converter.

↓ **OK**

Cause 3 : Check outside cause (Voltage drop or noise, etc.)

- Instant drop ----- Check if there is a large load electric apparatus in the same circuit.
- Momentary power failure ----- Check if there is a defective contact or leak current in the power supply circuit.
- Noise ----- Check if there is any equipment causing harmonic wave near electric line (Neon bulb or electric equipment that may cause harmonic wave).

↓ **OK**

Cause 4 : Remote Controller is defective.

▶ **Replace Group Remote Controller.**

Network converter (UTR-YGCA)

Error indication of 7 segment may occur at the same time in each PCB.
If errors have occurred in multiple number of PCBs at the same time, each PCB's error is indicated in interval of every 3 seconds.

CONDITION	INDICATION	CAUSE	MEASURE
Normal Condition	7 seg : OFF LED : 1) Red LED (Power) blinks approx. 3 sec. (0.5sec ON/0.5sec OFF) when power is turned on or reset (initialized). 2) Normal condition Red LED (Power) ON Green LED(MAIN,MID,BTM)ON	-	-
All OFF even the power is turned on	7 seg : OFF LED : OFF	1) No power supply 2) PCB failure	1) Check between L-N of Power Supply Terminal (AC208 to 230V) 2) Check between (2)-(3) of CN2 in Power PCB 3) Check if Fuse (F1) in Power PCB is open 4) Check DC12V and 5V at CN101 in Main PCB If above check and restarting with depressing reset key (SW106) does not improve the condition, replace the product.
Red LED keeps blinking rapidly. It blinks for 35 seconds in maximum. (0.5sec ON/0.5sec OFF)	7 seg : OFF LED : Green LED ON or OFF	1) Abnormal operation due to noise etc. 2) PCB failure	If restarting with depressing reset key (SW106) does not improve the condition, replace the product.
Red LED keeps blinking slowly. (1.5sec ON/1.5sec.OFF)	7 seg : OFF LED : Red LED (Power) blinks Green LED(MAIN,MID,BTM)ON	It is in the setting mode or maintenance mode.	1) Press MODE key If the red LED (PWR) turns ON, it has returned to a normal mode. NOTE) It automatically returns to the normal mode if the key is not operated for more than 2 minutes. 2) If it continues to blink even depressing MODE key; If restarting with depressing reset key (SW106) does not improve the condition, replace the product.
E009	7 seg : Same as left LED : Green LED (MAIN) blinks	Connector on Sub PCB removed. (Communication error between MAIN PCB and SUB PCB)	Check insertion of connectors (CN104, 105) in SUB PCB. (Make sure to turn off the power before removing and inserting the PCB) If above check and restarting with depressing reset key (SW106) does not improve the condition, replace the product.
E00b	7 seg : Same as left LED : Green LED (MAIN) blinks	1) Abnormal operation due to noise etc. 2) MAIN PCB error	If restarting with depressing reset key (SW106) does not improve the condition, replace the product.
E209	7 seg : Same as left LED : Green LED (MID) blinks	1) 6HP PCB is mounted to the MID connector (CN104). 2) Software writing error of RC PCB mounted on MID.	1) Check the 6HP PCB is securely mounted to the connector CN105. (Make sure to turn off the power before removing and inserting the PCB.) 2) Rewrite the correct software. If above check and restarting with depressing reset key (SW106) does not improve the condition, replace the product.
E20b	7 seg : Same as left LED : Green LED (MID) blinks	Loose connector of 6HP PCB (Communication error between MAIN PCB and 6HP PCB)	Check the 6HP PCB is securely mounted to the connector CN105. (Make sure to turn off the power before removing and inserting the PCB.) If above check and restarting with depressing reset key (SW106) does not improve the condition, replace the product.
E309	7 seg : Same as left LED : Green LED (BTM) blinks	1) RC PCB is mounted to the connector (CN105) at BTM. 2) Software writing error of 6HP PCB mounted on BTM	1) Check RC PCB is securely mounted to the connector CN104. (Make sure to turn off the power before removing and inserting the PCB.) 2) Rewrite the correct software. If above check and restarting with depressing reset key (SW106) does not improve the condition, replace the product.
E30b	7 seg : Same as left LED : Green LED (BTM) blinks	Loose connector of RC PCB (Communication error between MAIN PCB and RC PCB)	Check RC PCB is securely mounted to the connector CN104. (Make sure to turn off the power before removing and inserting the PCB.) If above check and restarting with depressing reset key (SW106) does not improve the condition, replace the product.
Group Remote Controller does not turn ON (No LCD indication)	7 seg : OFF LED : (Normal Condition) Red LED (PWR) ON Green LED (MAIN,MID,BTM) ON	1) Connection error of remote controller cable. 2) RC PCB failure or Remote Controller defective	1) Check connection of Remote Controller Cable. 2) Check if Remote Contoller Cable is incorrectly connected to the remote controller terminal of Converter. 3) Check the connector voltage at CN403 in RC PCB. Measure the voltage between DC12V(Terminal #1) and GND (Terminal #3) of the connector. • If it is within 12V±10%: Possible Remote Controller failure. • If it is lower than -10%: Possible transmission circuit failure in RC PCB. If above check and restarting with depressing reset key (SW106) does not improve the condition, replace the product.

CONDITION	INDICATION	CAUSE	MEASURE
"8C" is continuously indicated on the indicator of Group Remote Controller. Then after approx. 90sec. the error code "EC:1C" is indicated on the indicator of Remote Controller.	7 seg : OFF LED : (Normal Condition) Red LED (PWR) ON Green LED (MAIN,MID,BTM) ON	1) Connection error of remote controller cable 2) RC PCB failure or Remote Controller defective	1) Check connection of Remote Controller Cable. 2) Check if Remote Contoller Cable is incorrectly connected to the remote controller terminal of Converter. 3) Check the connector voltage at CN403 in RC PCB. Measure the voltage between DC12V(Terminal #1) and GND (Terminal #3) of the connector. • If it is within 12V±10%: Possible Remote Controller failure. • If it is lower than -10%: Possible transmission circuit failure in RC PCB. If above check and restarting with depressing reset key (SW106) does not improve the condition, replace the product.
No control with Group Remote Controller keys (Not able to start up or stop operation)	7 seg : OFF LED : (Normal Condition) Red LED (PWR) ON Green LED (MAIN,MID,BTM) ON	1) Incorrect connection of the communication cable at indoor/outdoor unit. 2) System error of Indoor /Outdoor unit 3) Transmission circuit error in 6HP PCB	1) Check incorrect connection of the communication cable at Indoor and Outdoor unit 2) Check if there is system error of Indoor and Outdoor unit 3) Check 6HP PCB • Check if the fuse in 6HP PCB is open • Measure the AC voltage between (N)(Terminal #2) and (Communication Line)(Terminal #3) of the power supply terminal Terminal voltage is around AC30V : Normal Terminal voltage is much different from AC30V (AC0 - 240V) : Abnormal If above check and restarting with depressing reset key (SW106) does not improve the condition, replace the product.

6-5-4 TROUBLE SHOOTING WITH NO ERROR CODE

1. INDOOR UNIT NO POWER

Forecast of Cause:

1.Relation of installation construction
  1)Use of specified material
  2)Check the power supply

2. Relation of Indoor unit Filter PCB
  1)Wiring of connection cable
  2)Check power supply
  3)Check Fuse of Indoor unit filter PCB
  4)Check varistor of Indoor unit filter PCB
  5)Check Power PCB
  6)Check Thermal Fuse of Indoor unit

3. Relation of outdoor unit

Check Point 1-1 : Check the installation work

・Check Cable / Breaker

・Check if any loose connection or removal of cable.

Use		Wire size [cross-section (mm^2)]	Remark
Power supply cable	Outdoor unit	5.0 to 8.0	H07RN-F or equivalent, Single-phase, 50HZ, 220-240V, 2Wire + Ground
Connection cable	Indoor unit	≧ 2.5	H07RN-F or equivalent, Single-phase, 50HZ, 220-240V, 3Wire + Ground
		≧ 1.5 (If total wire length < 50 m)	
Circuit breaker		30 (A)	

Follow the installation Manual if any installation failure is found.

Check Point 1-2 : Check Power supply

・Check external cause (Power supply)
・Instant Drop ・・・Check if there is an electric equipment with a large load in the same circuit.
・Instant Power Outage ・・・Check if there is a defective contact or leakage in the power supply.
・Noise・・・・Check if there is any equipment that cause the harmonic wave near the power line.
(Neon tube or Electric equipment that harmonic wave Check that the grounding is completely insulated.)

Check Point 2 : Check Indoor unit Filter PCB

Checking method when certain Indoor unit does not turn ON.

1)Check the wiring (incorrect wiring, loose wiring , etc.)of connection cable.
2)Check Power Supply voltage AC220～240V between Indoor unit terminal 1-2.
If it is NG, trance the connection cable at Outdoor unit side.
3)Check FUSE(F101) of Filter PCB
If it is NG, Check shortage of ①－② or cable wiring, then replace FUSE.
4)Check Varistor of Filter PCB (VA102,VA101)
If it is NG, check if the specified power voltage is supplied and replace Varistor.
5)Remove CN1 from Control PCB, and check AC220～240V.
If it is NG, replace Power PCB.
6)Check the continuity of Terminal FUSE(Only for Wall mounted and Cassette Type)
If it is NG, check the the material and dielectric voltage, and replace Thermal FUSE.

Checking method when all Indoor unit do not turn ON.

1)Check above items 1) through 6)
2)Check the insulation between terminal 1–2 of Outdoor unit.
If it is NG, remove the connection cable from the terminal Indoor unit and trace the abnormal condition.

Check Point 3 : Check Outdoor unit

3)Check the power supply of Outdoor unit.
Refer to Trouble shooting 2 OUTDOOR UNIT NO POWER.

2. OUTDOOR UNIT NO POWER

Forecast of Cause:

1. Relation of installation construction
   1) Use of specified material
   2) Check the power supply
2. Relation of Outdoor unit filter PCB
   1) Connection cable wiring
   2) Check Power supply
   3) Check Varistor of Outdoor unit
   4) Check Fuse of Outdoor unit
   5) Check CT of Filter PCB
3. Check the parts around Filter PCB
   1) Check Power Relay
   2) Check Diode Bridge
   3) Check Active Filter Module
4. Relation of Outdoor unit Controller PCB
   1) Check DC Input
   2) Check FUSE(F1)

Check Point 1-1 : Check the installation work

・Check Cable / Breaker

・Check if any loose connection or removal of cable.

Use		Wire size [cross-section (mm^2)]	Remark
Power supply cable	Outdoor unit	5.0 to 8.0	H07RN-F or equivalent, Single-phase, 50HZ, 220-240V, 2Wire + Ground
Connection cable	Indoor unit	≧ 2.5	H07RN-F or equivalent, Single-phase, 50HZ, 220-240V, 3Wire + Ground
		≧ 1.5 (If total wire length < 50 m)	
Circuit breaker		30 (A)	

Follow the installation Manual if any installation failure is found.

Check Point 1-2 : Check Power supply

・Check external cause (Power supply)
・Instant Drop ・・・Check if there is an electric equipment with a large load in the same circuit.
・Instant Power Outage ・・・Check if there is a defective contact or leakage in the power supply.
・Noise・・・・Check if there is any equipment that cause the harmonic wave near the power line.
(Neon tube or Electric equipment that harmonic wave Check that the grounding is completely insulated.)

Check Point 2 : Check Outdoor unit Filter PCB

1)Check wiring of Power cord / Connection cable (incorrect wiring, loose wiring, etc.)
2)Check Power Supply AC220～240V between Outdoor unit terminal 1-2.
If it is NG, Check the power cord at the circuit breaker side
3)Check Varistor (VA202,VA203)
If it is NG, Check if power supply other than the specified one is connected.
If Varistor is defective, replace it.
4)Check FUSE (F201)
・If it is open, check the shortage between ①－② and replace the FUSE **F201: P/No.0600376062**
5)Check the voltage (AC220～240V) between Power Supply W203-W204.
・If it the voltage is abnormal, replace Filter PCB Check CT (PARTS INFORMATION 1)
6)Check FUSE (F203)
・If FUSE is open, check the cause of open and replace the FUSE. **F203 : P/No. 0600385163**
7)Check VA201
・If it Varistor is defective, check the primary side voltage and replace the varistor.

Check Point 3 : Check the parts around Filter PCB

1) Check Power Relay (PARTS INFORMATION 2)
2) Check Diode Bridge (PARTS INFORMATION 3)
3) Check Active filter module (PARTS INFORMATION 4)

Check Point 4 : Check Outdoor unit Controller PCB

1)Check DC 300V +/- 20V at CN10 of Control PCB.
If DC300V +/-20V does not appear, Check Capacitor
2)Check Fuse (F1) of Control PCB
If the FUSE is open, locate the cause of open and replace the fuse.
If another abnormal is found, replace Control PCB.

3. INDOOR UNIT DOES NOT OPERATE	Forecast of Cause: 1.Check Remote controller / Address 1)Check Wireless Remote controller 2)Check Wired / Simple remote controller 2.Check operating Condition 3.Relation of Indoor unit 1)Check Fan motor 2)Check each thermistor 4.Check EEV-KIT 5.Relation of outdoor unit 1)Check EEV1

Check Point 1-1 : Incase of Wireless Remote Controller

- **Check the response sound from Indoor unit with Remote control operation.(Remote control receiving Check)**
  NG→ Check the wiring of the cable between Main unit – Receiver Unit
- **Check custom code setting (Check custom code)**
  NG → Refer to custom code setting procedure.
- **Check address setting (Address Duplication check)**
  Press Manual AUTO for 3 sec. →Operation LED lighting ,Timer LED flashing time = It indicates Current Address
- **NG→It address is duplicated, perform address setting once again.**

Check Point 1-2 : Incase of Wired / Simple Remote Controller

- **Check the Indoor unit operation by the remote control operation.(Remote control receiving Check)**
  NG→ Check the wiring of the cable between Remote control Main unit – Control PCB
- **Check address setting (Address Duplication check)**
  press「△」＋「▽」＋①(START/ STOP) at the some time →Current Address indicate
  - **NG→If the address is duplicated, conduct the address setting once again.**

Check Point 2 : Check operating Condition (Normal function)

- **3HT or 3ST(Pressure Balance operation : OUTDOOR UNIT : LED 4 1time blink)**
- **Oil recovery or Defrost MODE : INDOOR UNIT Operation LED 3sec.ON / 1sec.OFF**
- **TEST RUN MODE :Operation LED and Timer LED Blinking at the same time**
- **Thmo-Control** · **Cold Air prevention** · **Operation mode is wrong.**

Check Point 3-1 : Check Indoor unit Fan motor

- **Check if Fan motor can e rotated by hand.**
- **Check FAN / Motor**
  Check FAN MOTOR (PARTS INFORMATION 13～15)

Check Point 3-2 : Check Indoor unit Thermistor

Check Room temperature thermistor (TROUBLE SHOOTING 4)
Check Heat exchanger (Inlet) thmistor (TROUBLE SHOOTING 5)
Check heat exchanger (Middle) thermistor (TROUBLE SHOOTING 6)

Check Point 4 : Check EV - KIT

- **Check EV- KIT**
- **Check if Strainer is clogged**

Check EV- KIT (PARTS INFORMATION 11)

Check Point 5: Relation of outdoor unit

- **Check Outdoor unit EEV1**

Check EEV1 (PARTS INFORMATION 10)

4. NOT COOLING OR NOT HEATING	Preliminary Check : 1.Check Environmental cause 1)Check the Air Flow route 2)Check the relationship between Capacity and Installation location 2.Check Outdoor unit 1)Check Compressor operation 2)Check Outdoor unit Fan and air flow route 3)Check EEV1 4)Check DIP SW setting 3.Check Indoor unit (Indoor unit Test operation) 1)Check Indoor unit Fan / Fan motor 2)Check each Thermistor 3)Check address setting 4.Check EV - KIT 5.Check Refrigerant (No gas, gas Leak)

Check Point 1-1 : Check Air Flow Route

- Check if any obstruction in front of Indoor unit Air exhaust
- Check If any obstruction at inlet of Indoor unit
- Check if Filter is dirty

Check Point 1-2 : Check Indoor unit capacity and installation location

- Check if the suitable Indoor unit capacity and installed force capacity.
- Check the ceiling height or other air conditioning equipment.

Check Point 2-1 : Check Compressor

- Check compressor operation

  Check Compressor (PARTS INFORMATION 6)

Check Point 2-2 : Check Outdoor unit Fan motor

- Check if Fan motor can rotated by hand.

  Check FAN MOTOR (PARTS INFORMATION 7)

Check Point 2-3 : Check EEV1

- Check EEV1
- Check if strainer is Clogged

  Check EEV1 (PARTS INFORMATION 7)

Check Point 2-4 : Check DIP SW setting

- Dip SW6(1,2) PIPE LENGTH
- Dip SW7(1 to 4) Model Information

  Refer 2-2-4 Function of Each Setting

Check Point 3-1 : Check Indoor unit Fan motor

- Check if Fan motor can e rotated by hand.
- Check FAN / Motor

  Check FAN MOTOR (PARTS INFORMATION 13～15)

Check Point 3-2 : Check Indoor unit Thermistor

Check Room temperature thermistor (TROUBLE SHOOTING 4)

Check Heat exchanger (Inlet) thmistor (TROUBLE SHOOTING 5)

Check heat exchanger (Middle) thermistor (TROUBLE SHOOTING 6)

Check Point 3-3 : Check Address Setting

- Check Indoor unit address overlaps

  When the indoor unit that the address overlaps is operate, the outdoor unit doesn't operate.

Check Point 4 : Check EV -KIT

- Check EV- KIT
- Check if Strainer is clogged

  Check EV-KIT (PARTS INFORMATION 11)

Check Point 5 : Check Out of Gas or Gas Leak of Refrigerant

- Conduct Leak Check at Piping connection.
- Check if the refrigerant amount is proper by measuring Gas pressure.

  (Condensation temp., Refrigerant Pressure Chart) Refer Service manual 8-4-2
- Check Leak portion.

  SEALING TEST

  Charge the piping with nitrogen to the sealing test pressure (600psi [4.15Mpa]).

  After 24 hours, check that pressure has not fallen.

  Note: When the ambient temperature changes by 5°C, the test pressure changes about 10psi (0.07Mpa).

When the refrigerant is recharged, make sure to perform the vacuuming and charge the originally specified amount.

5. WATER LEAKAGE	Estimated details : 1.Piping 1)Installation of insulation material at each piping connection. 2)Check frosting of insulation material. 3)Check EV-KIT. 4)Check slope of Drain Hose. 2. Check Unit 1)Check inclination of the unit installation. 2)Check Drain cap and Drain Hose. 3)Check Drain Pan. 4)Check Drain Pump.

Check Point 1-1: Check Piping

- **Check the mounting condition of insulation material at each piping connection.**

Check if there is gap at the insulation material at the piping joint.

Check Point 1-2: Check Piping

- **Check frosting of Insulation material.**

Does the thickness of insulation material proper against humidity ?

Humidity Over 80% ・ ・Recommended insulation material 20mm

Humidity 70 to 80% ・ ・Recommended insulation material 15mm

Check Point 1-3: Check Piping

- **Check EV - KIT**
  - **Check if there is a gap on insulation material at EV- KIT installation position.**
  - **Check if the wire of SOLENOID COIL is trapped.**

Check Point 1-4: Check Piping

- **Check slope of Drain Pipe**
  - **Check if the inclination of piping is correct.**
  - **Check if there is frosting at Drain Pipe.**

Check Point 2-1: Check Unit

- **Check inclination of the installation**

Check If there is an inclination of the installed unit.

Check Point 2-2: Check Unit

- **Check Cap / Hose.**
  - **Check if Drain Caps is correctly mounted.**
  - **Check if Drain Hose is clogged.**
  - **Check if the Drain Hose mounting is loose.**

Check Point 2-3: Check Unit

- **Check Drain Pan**
  - **Check if Drain Pan is cracked.**
  - **Check if the inside of Drain Pan is dirty.**

Check Point 2-4: Check Unit

- **Check Drain Pump**
  - **Check the connection between Drain Pump and Control PCB**
  - **Check the ON detection of the pump is correct.**
  - **Refer to Drain Abnormal**

6. ABNORMAL SOUND IS HEARD FROM INDOOR UNIT	Estimated details : 1.EV – KIT (Open excessively) 2.Installed piping 3.Indoor unit 1)Installation 2)FAN & FAN MOTOR 4. Normal Function 1) Refrigerant flow sound 2) Defrost operation

Check Point 1: EV - KIT (Open excessively)

- **When the EV-kit Valve is open excessively, other indoor units may not operate at full capacity or a loud refrigerant rushing sound may be generated.**

Turn off the power source of PCB of the indoor unit to initialize the EV-KIT for several times.
Put 3 minute interval between each initializations. The EV-KIT VALVE may return to normal.

Check EV-KIT (SERVICE INFORMATION)

Check Point 2: Installed piping

- **When the liquid Pipe diameter is large, a refrigerant rushing sound will be generated and when the diameter is small, capacity will be insufficient.**

Check the design of piping installation

Check Point 3-1: Installation

Check if sound will stop, when touch the unit by the hand.

- **Check installation of indoor unit.**
- **Check the grill contact with the chassis.**

Check Point 3-2 : FAN & FAN MOTOR

- **Check contact of casing with a fan.**
- **Check the contact of the shaft of the fan.**

Normal Function : Refrigerant flow sound

- **During operation and immediately after stopping the unit, the sound of water flowing in the air conditioners piping may be heard. Also, noise may be particularly noticeable for about 2 to3 minutes after starting operation (Sound of refrigerant flowing)**

Normal Function : Defrost operation sound

- **During heating operating, a sizzling sound may be heard occasionally. This sound is defrost operation.**

6-6 CASES SUCH AS THESE ARE NORMAL

■ Operation not trouble

From the standpoint of control, the following operations are incorporated for air conditioner operation and protection. They do not indicate trouble.

OPERATION		DESCRIPTION	INDOOR UNIT	REMOTE INDICATION
Red and green lamps flash alternately.		Indicates that the power came on normally when power was applied (at power failure recovery). Indication is cleared by RUN command.	The red and green lamps flash alternately in the operation stop state.	
		When test run is performed, the unit operates without regard to the temperature setting. Stopped by remote controller stop. or reset after 60 minutes.	The red and green lamps flash simultaneously in the operation state.	TEST
Red lamp flashes.		Operation is stopped and refrigerant is passed through the indoor unit to remove the outdoor unit frost (defrosting operation) or to recover the refrigerant oil (oil recovery operation). The indoor unit stops in about 5-10 minutes.	The fan stops and the refrigerant passes through. The red lamp flashes slowly.	DEFROST OIL RECOVERY
Indoor unit fan does not operate even through the RUN signal has entered.		The fan is stopped to prevent blowing out of cold air when the machine is still not warm at the start of heating operation. About 3 minutes are necessary.	The fan stops and the red lamp lights steadily.	
Fan turns ON / OFF periodically.		When the room temperature at heating operation reaches the set temperature, the FAN is stopped and room temperature rise is prevented. At this time, the fan is operated periodically to detect theroom temperature. (4 minutes stop, 1 minute operate)	The fan continues to operate and the red lamp lights steadily.	
RUN signal is input, but is not accepted. Buzzer sounds.		When an [AUTO], [FAN] and an operation other than the operation another indoor unit is already performing at cooling / heating selection type or [HEAT] operation at a cooling only unit is commanded, operation cannot be performed at that setting.	Buzzer buzzes 5 times and setting is not received. Operation before setting continues.	
Makes a sound even after operation stops.		After cooling operation stops, the drain pump is operated. Remains for 3 minutes.		
Makes a sound while operating.	Flowing liquid sound during operation.	A sound changed by the refrigerant flow may be made by operation of another indoor unit connected to the same outdoor unit. A switch sound may be made at the start and after the end of defrosting operation and oil recovery operation.		
	Squeaking sound.	This is due to expansion and contraction of resin parts by the temperature change during heating operation and oil recovery operation.		
	Switching sound.	A sound is generated when the internal valve is switched at operation switching and at the start of defrosting operation and oil recovery operation.		

When operation and indication other than the above occurs, call the manager.

6-7 SERVICE PARTS INFORMATION

SERVICE PARTS INFORMATION 1
Current transformer

P/No. 9705256026 (Filter PCB)

Check Point 1: Check connector of CT

・Check the connection of connector CN202,CN11

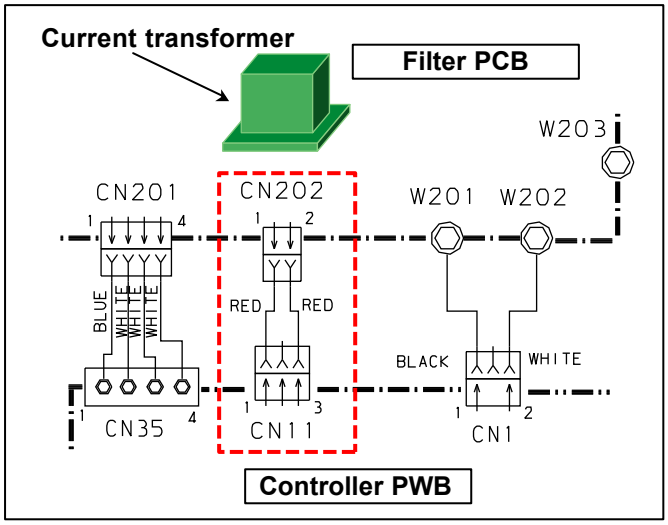

Check Point 2: Resistance value of CT

・Check the terminal resistance of CT

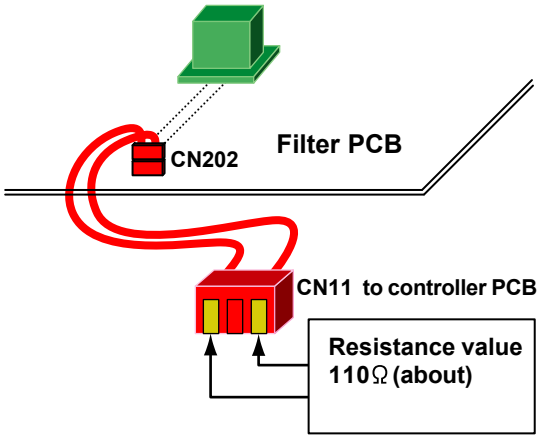

☆If the resistance value value is abnormal, replace Filter PCB.

Check Point 3: Check voltage of CT detection current (Reference)

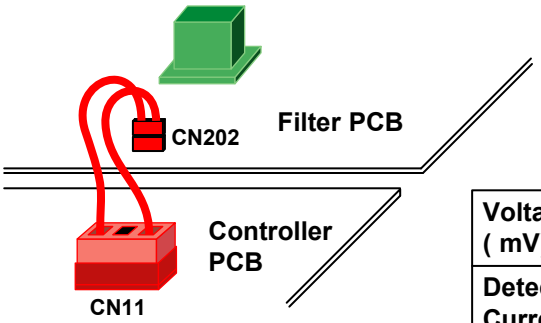

The value of the measured result is a reference value.

Voltage value (mV)	400	561	737	948	1187
Detection Current (A)	5.6	6.9	8.4	10.0	12.0

Voltage value (mV)	1525	1721	1971	2231	2495	2720	3001	3246
Detection Current (A)	14.7	16.2	18.2	20.2	22.3	24.0	26.1	28.0

SERVICE PARTS INFORMATION 2
Main Relay

P/No. 9900262013 (Power Relay)

Check Point 1: Check the circuit connection and Coil in relay

・Check the connection of each terminal

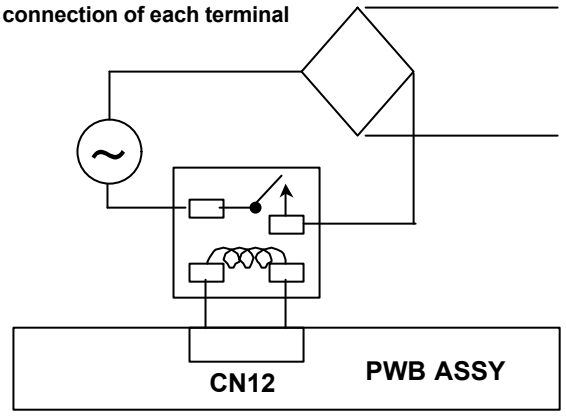

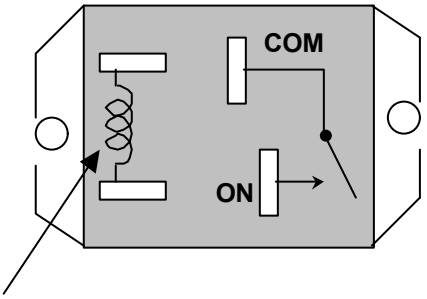

Resistance Value : **120Ω (About)**

☆**If it is 0Ω (OPEN),replace Diode block.**

Check Point 2: Check relay operation during normal operation

1. If Relay does not operate (OPEN between COM – ON)
   ・Check coil resistance value 120Ω (approx)
   If the coil is cut off (open), replace Power relay.
   ・Check the terminal voltage of DC+ 12V at CN12 of control PCB.
   If DC+12V does not appear, replace Control PCB
2. When relay does not release (Always ON even all indoor units are stopped).
   :: Except the preheat control.
   ・Remove connector to the relay and check the continuity between COM – ON.
   It there is a continuity, the relay is shorted by welding, etc.

SERVICE PARTS INFORMATION 3
Diode Power Bridge

P/No. 0100122039 (Diode Power Bridge)

Check Point 1: Check Circuit connection

・Check the connection to each terminal.

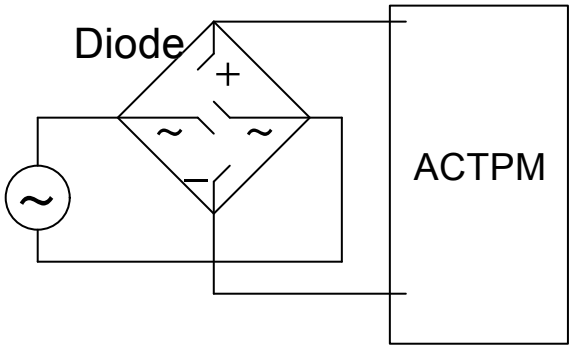

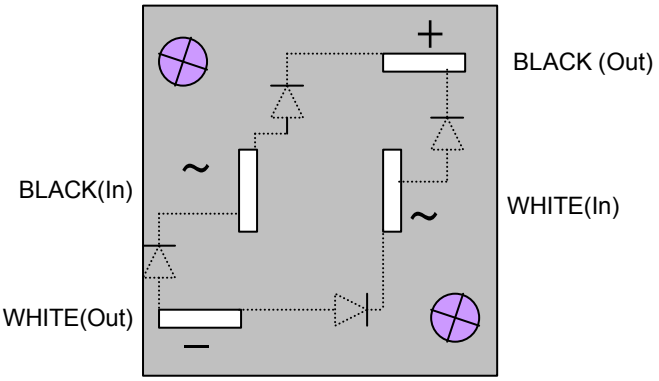

Outdoor unit FAN side

Check Point 2: Check OPEN / SHORT of circuit

・**Remove each terminal and check the open / short of circuit in the module by meter.**

(+),(-) shows the terminal of the meter

Read wire		Resistance Value
BLACK Out (-)	WHITE In (+)	1MΩ greater
	BLACK In (+)	
WHITE Out (+)	BLACK In (-)	
	WHITE In (-)	

☆**If it is abnormal, replace Diode Bride**

SERVICE PARTS INFORMATION 4

Active filter module

P/No. 9707278019 (Active Filter Module)

Check Point 1 : Check Open or Short-circuit and Diode (D1)

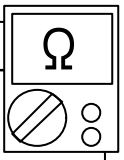

・Remove connector, check the open or short-circuit and the diode in the module

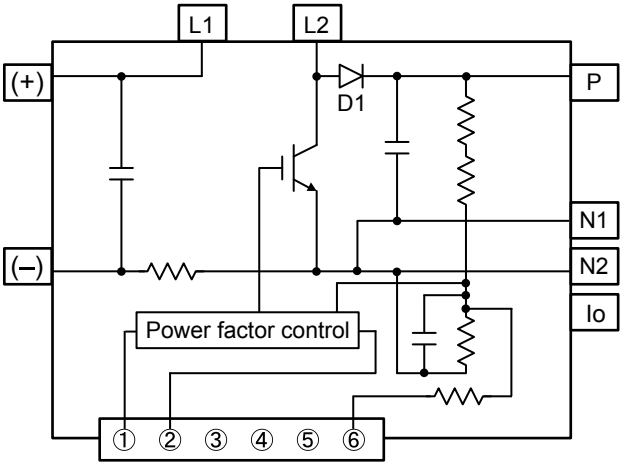

Check the open or short-circuit

Terminal		Resistance value
Tester(+)	Tester(-)	
(+)	(−)	**360kΩ ±20%**
(−)	N1	**0 Ω**
P	(+)	**720kΩ ±20%**
L1	L2	**1.01MΩ / 761kΩ** (Ref. value 1) (Ref. value 2)
P	N1	**360kΩ ±20%**
L1,L2	Control Box	**∞ Ω**
L2	N2	**1.65MΩ / 1.14MΩ** (Ref. value 1) (Ref. value 2)

Check the diode

Terminal		Resistance value
Tester(+)	Tester(-)	
L2	P	**1.32MΩ / 663kΩ** (Ref. value 1) (Ref. value 2)
P	L2	**1.01MΩ / 762kΩ** (Ref. value 1) (Ref. value 2)

Ref. value 1
Specifications for Multimeter
Manufacturer : FLUKE
Model name : FLUKE11
Power source : DC9V.

Ref. value 2
Specifications for Multimeter
Manufacturer : Sanwa
Model name : PM3
Power source : DC3V.

▶ **If it is abnormal,replace ACTIVE FILTER MODULE**

Check Point 2 : Check the Output DC voltage (between P and N1)

・Check the Output DC voltage (between P and N1) of compressor stopping and operating.

>> If the output voltage of compressor operating is less than the output voltage of compressor stopping, Active Filter Module is detective. >> **Replace Active Filter Module**

SERVICE PARTS INFORMATION 5
TR ASSY

P/No. 9705253032 (TR ASSY)

Check Point 1: Check Circuit connection

・**Check the connection to each terminal.**

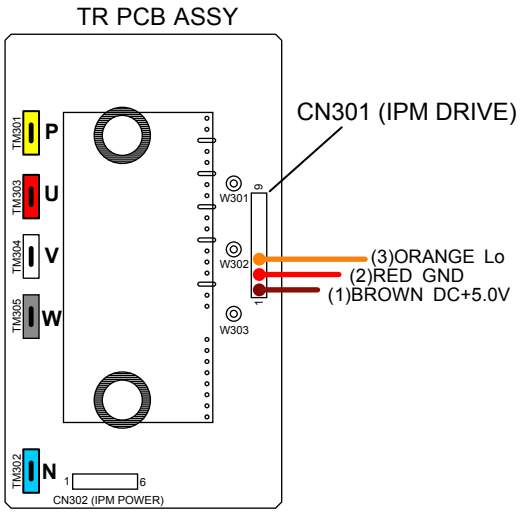

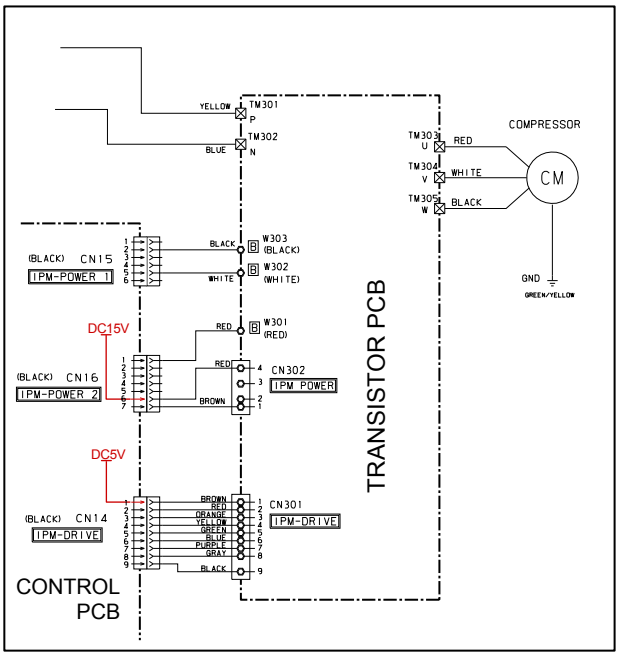

Check Point 2 : Check Control PCB or TR PCB ASSY

1.Check the supply voltage from Control PCB to IPM
Check DC+15.0V between terminal 1-2 of main PCB CN16 (IPM Power supply)
If the voltage does not appear,replace Control PCB

2.Check the voltage at Trip Terminal (To Check TR PCB)
Remove the connector CN14 between TR PCB ASSY- Control PCB.
Check DC+5V between terminal 1-2,2-3 of CN14 (Connector side)

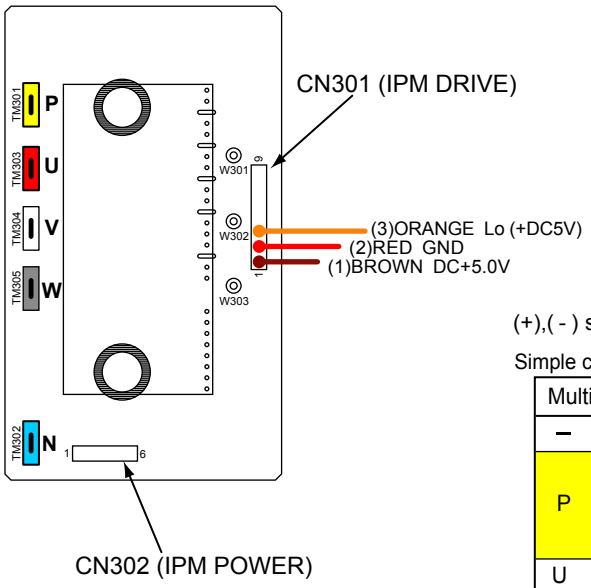

(+),(-) shows the terminal of the meter

Simple confirm method for digital meter.

Multimeter		Resistance value
−	+	1M Ohm or greater
P	U	
	V	
	W	
U	N	
V		
W		

The resistance value is changes in a type of the tester (Digital or Analogue) and internal resistance.

Confirm method for analog meter.

P / N TERMINAL	COMP TERMINAL	Normal resistance value
P (+)	U (−)	14～15Ω
	V (−)	
	W (−)	
P (−)	U (+)	∞Ω
	V (+)	
	W (+)	
N (+)	U (−)	∞Ω
	V (−)	
	W (−)	
N (−)	U (+)	14～15Ω
	V (+)	
	W (+)	

SERVICE PARTS INFORMATION 6
Compressor ASSY

P/No. 9372716014 (Compressor ASSY)

Check Point 1: Check Circuit connection

- Check the connection to each terminal.

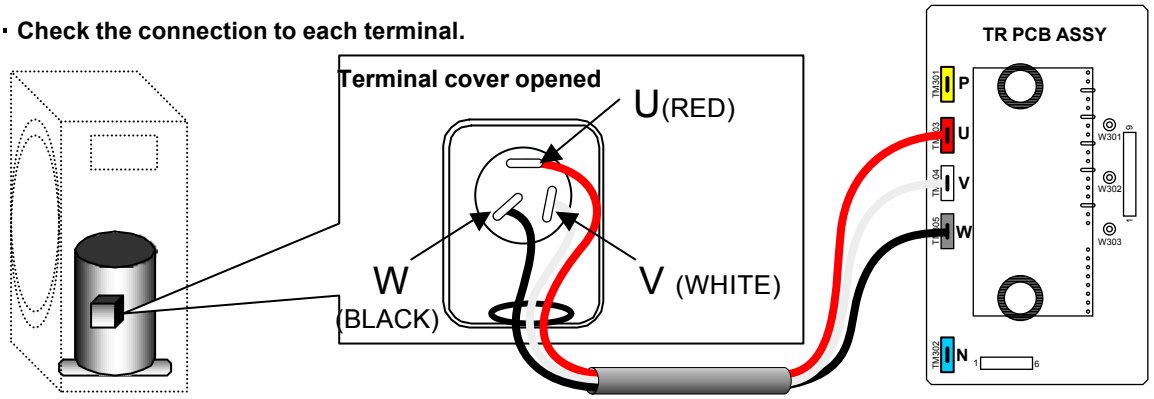

Check Point 2: Check Operation

- Check Pressure when compressor operate.
  1) Pressure decreases when the refrigerant is less. 2) Pressure decrease when the Piping is blocked.
- Check discharge temperature when compressor operate.
  1) Temperature rises when the refrigerant is less.
- Check operating current when compressor operate.
  1) Operating current rises when the refrigerant is less. 2) Operating current rises when the compressor is rock.

Check Point 3: Check Winding resistance

- Check between each terminal of resistance value.

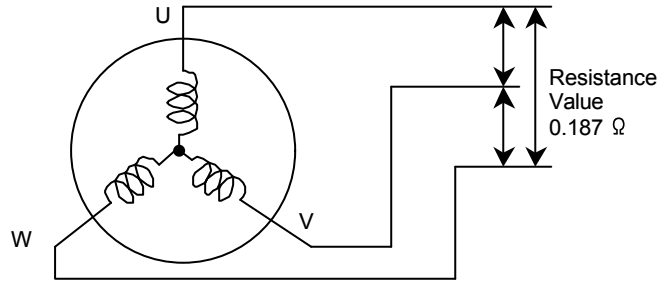

☆If the resistance value is either 0 Ω or ∞ Ω, replace Compressor

Check Point 4: Check condition of cooling Test Operation

Check Compressor speed at Test Operation

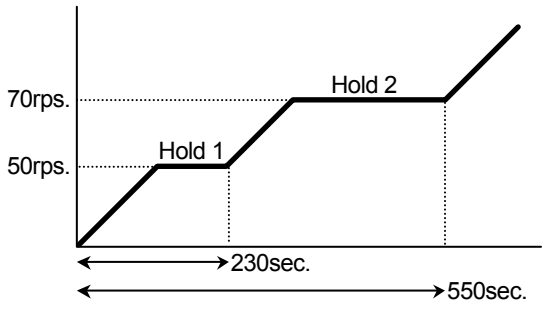

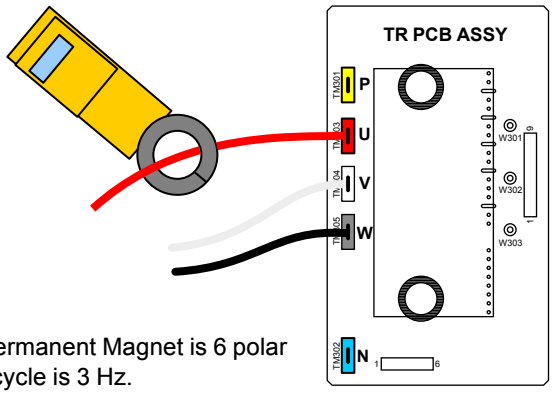

Permanent Magnet is 6 polar
1cycle is 3 Hz.

SERVICE PARTS INFORMATION 7
FAN Motor Outdoor unit

P/No. 9601705017 (Motor induct)

Check Point 1: Check Circuit connection

- Check wiring of connectors between Control PCB CN2 - Joint Connector - Fan motor
- Check FAN capacitor connect (Yellow / Black)

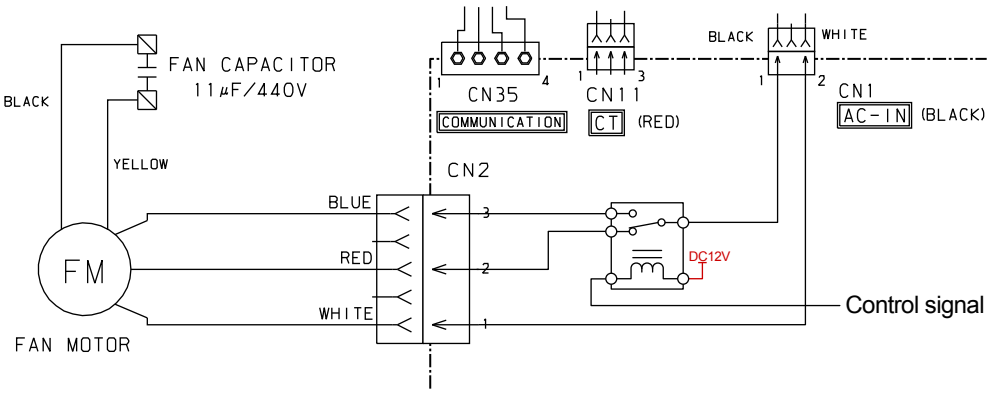

Check Point 2: Check Open / Short of circuit

- Check open / short of the coil in Fan Motor

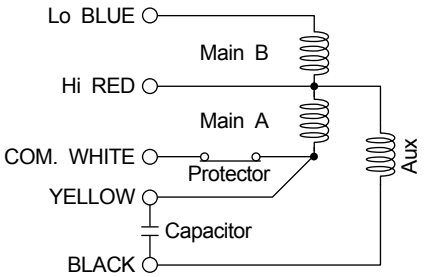

ITEM	READ WIRE	RESISTANCE VALUE (Ω)
Main A	WHITE(1) - RED(2)	45.0 ±5%
Main B	RED(2) - BLUE(3)	59.5 ±5%
Aux	RED(2) - BLACK	22.5 ±5%

☆If it is abnormal, replace Fan motor

Check Point 3: Check Fan motor Power supply

- Check Output voltage of CN2.
As stand – by, check AC220V+/-20V between CN2(2) - CN1(2)

☆If it is 0 V, check the connection of AC IN (CN1) or Power supply

Check Point 4: Check around Fan motor

Check if there is an obstruction of air flow route to Fan Motor.
Too close to Wall / Dirt / Mud

SERVICE PARTS INFORMATION 8
Pressure SW「」

P/No. 9900186012 (Hi pressure SW)
P/No. 9900187019 (Lo pressure SW)

Check Point 1: Check Circuit connection

- Check the connects CN19, CN20, and each terminal connection at SW side (inside the insulation material)
- Remove the connector and check continuity between terminals. Normal (When pipe is connected) : SHORT

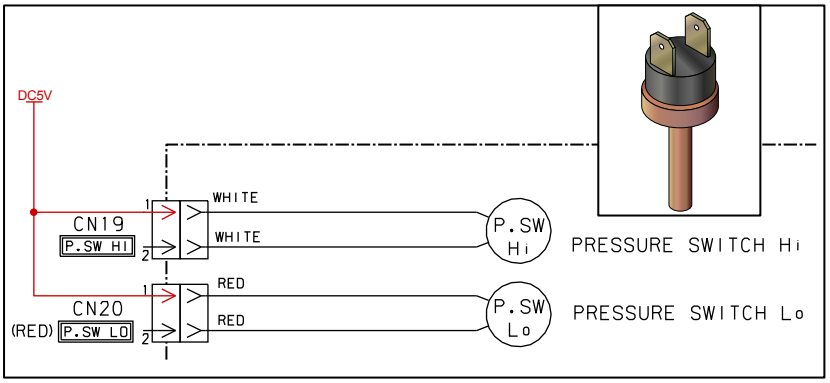

Hi pressure

OFF ≧4.2±0.1Mpa
ON ≦3.2±0.15Mpa

Lo pressure

ON ≧0.35±0.05Mpa
OFF ≦0.2±0.05Mpa

Check Point 2: Check the power supply voltage to Pressure SW

- Check the voltage DC+5.0V between 1 - 2 of CN19 or CN20.

☆If DC+5.0V does not appear,replace Control PCB

SERVICE PARTS INFORMATION 9
S V－「」

P/No. 9900188023 (VALVE)
P/No. 9900189174 (Solenoid COIL 1)
P/No. 9900189181 (Solenoid COIL 2)

Check Point 1: Check Circuit connection

・Check Connectors CN4,CN5. Also check if cable is broken.

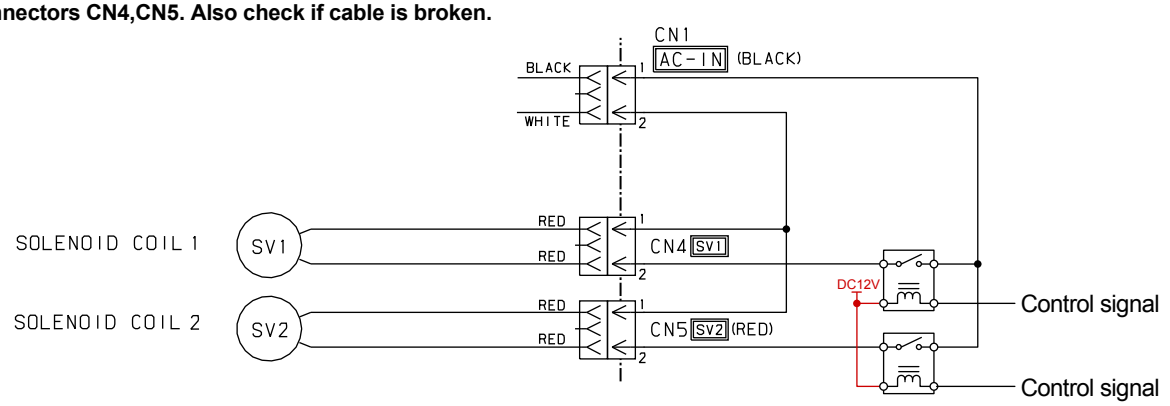

Check Point 2: Check Solenoid coil

・Remove connectors CN4,CN5, Check if the resistance of coil. Normal resistance value of each coil :1.5kΩ (approx)

☆If the resistance value is abnormal Due to cut- off etc. replace the solenoid coil.

Check Point 3: Check voltage of Solenoid coil

・During normal operation, the voltage between 1- 2 of CN4 / CN5 is OV. It becomes 220V+ - 20V when it is ON due to the protection operation etc..

☆If the voltage is abnormal, replace Control PCB.

Check Point 4: Check operation of Solenoid Valve

・Check the temperature difference between inlet and Out of the piping if it is function normal depending on the normal operation control condition.

Normal Operation
Pipe (In) TEMP. Hi,
Pipe (Out) TEMP.Normal

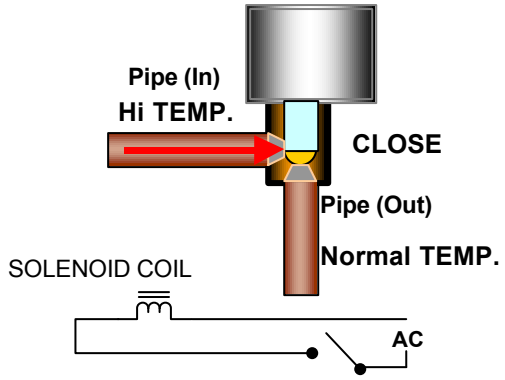

Protection Function ,
Pressure Balance condition (3ST)
Pipe (In) TEMP.= Pipe (Out) TEMP.

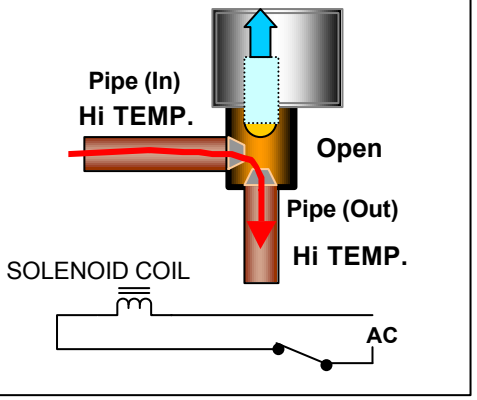

☆If the location of valve is not proper, replace the valve.

Check Point 4: Check when Bypass can not be released during normal operation.

1.Remove the connector of the desired valve, and check if the by pass is released.
If it is release, replace Control PCB.
(It is due to defective Relay or Shorted AC line.)

2.If it is not released by above item1., replace the valve.

①Clogging due to oxidized film etc.
②Deform due to over heating during the valve installation.

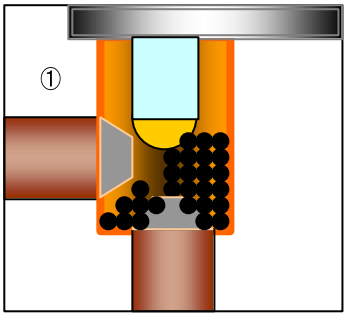

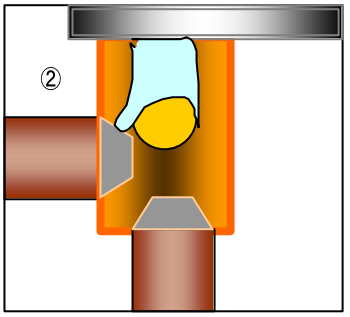

SEVICE PARTS INFORMATION 10
EEV1 Outdoor unit

P/No. 9900170028 (VALVE)
P/No. 9900190026 (Electric COIL)

Check Point 1: Check Circuit connection

- Check wiring of connector CN17.

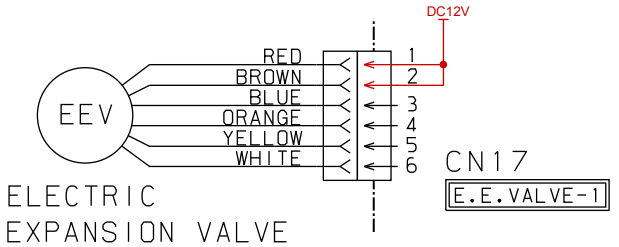

Check Point 2: Check Solenoid coil

- Remove CN17 and check the resistance value of coil in the motor.

Read Wire	Resistance Value
· RED – ORANGE · RED – WHITE	43Ω
· ORANGE – WHITE	85Ω
· BROWN – BLUE · BROWN – YELLOW	43Ω
· BLUE – YELLOW	85Ω

☆If the resistance value is abnormal, replace Control PCB

Check Point 3: Initialize of Positioning

- Turn off the power source of PCB of the outdoor unit to initialize the EEV for several times.

Check Point 4: Check voltage of Control PCB

- Remove CN17, and check DC+12V output voltage. If there is 0V, replace main PWB.

Check Point 5: Check the sound when power is turned ON

- Check the magnetized sound by the initial operation when power is turned on. If its sound does not appear, replace Control PCB.

Check Point 6: Check Operation of solenoid valve, check Open / Close operation by temperature difference

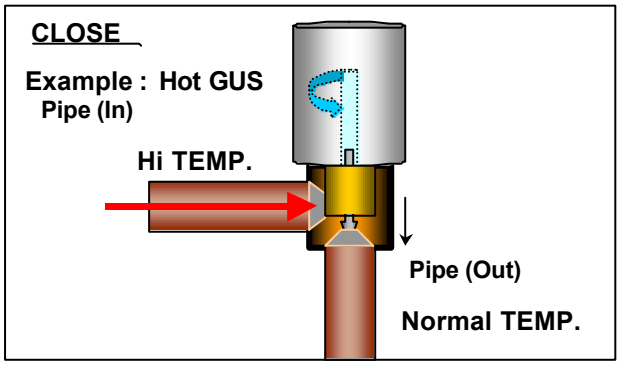

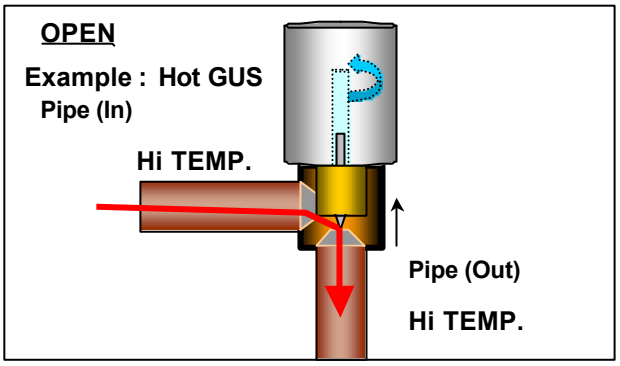

Check Point 7: Check clogging of strainer

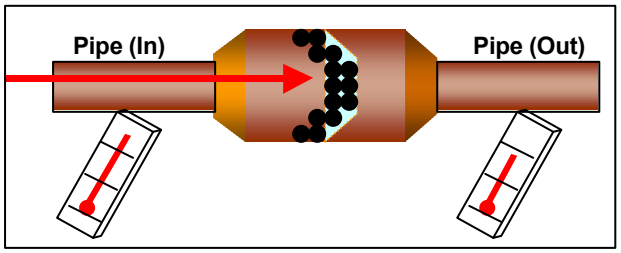

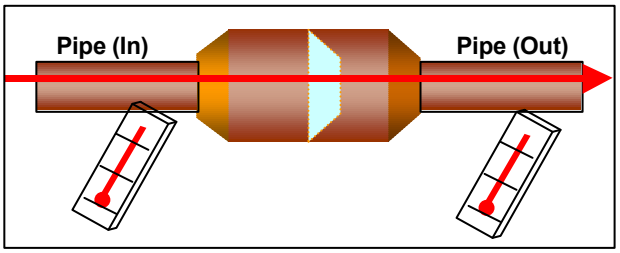

- If there is a temperature difference between Strainer terminals, there is a possibility of clogging .Check the temperature difference.

And check the movement of inside dirty by changing the operation mode from Cooling to Heating, or from Heating to Cooling.

PARTS INFORMATION 11
EV – KIT

Option Parts. UTR-EV2A, UTR-EV3

Check Point 1: Check Circuit connection

- Check the connection of connector CN14

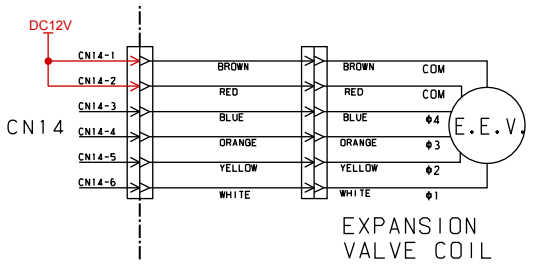

Check Point 2: Check Solenoid Coil

- Remove CN14 and check the resistance value of coil in the motor

Read Wire	Resistance Value
・RED – ORANGE ・RED – WHITE	140Ω
・ORANGE – WHITE	300Ω
・BROWN – BLUE ・BROWN – YELLOW	140Ω
・BLUE – YELLOW	300Ω

☆If the resistance value is abnormal, replace Control PCB

Check Point 3: Initialize of Positioning

- Turn off the power source of PCB of the outdoor unit to initialize the EEV for several times.

Check Point 4: Check voltage of Control PCB

- Remove CN14, and check DC+12V output voltage. If there is 0V, replace main PCB.

Check Point 5: Check the sound when power is turned ON

- Check the magnetized sound by the initial operation when power is turned on. If its sound does not appear, replace Control PCB.

Check Point 6: Check Operation of solenoid valve, check Open / Close operation by temperature difference

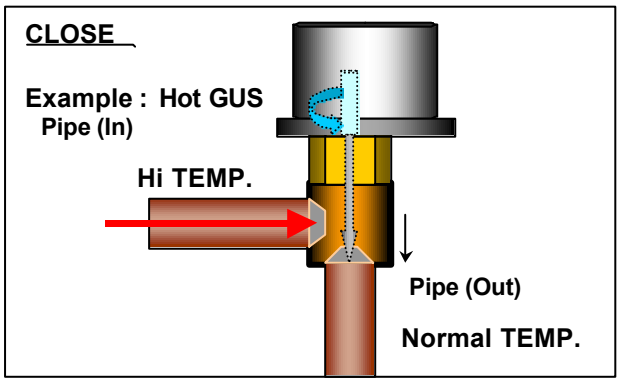

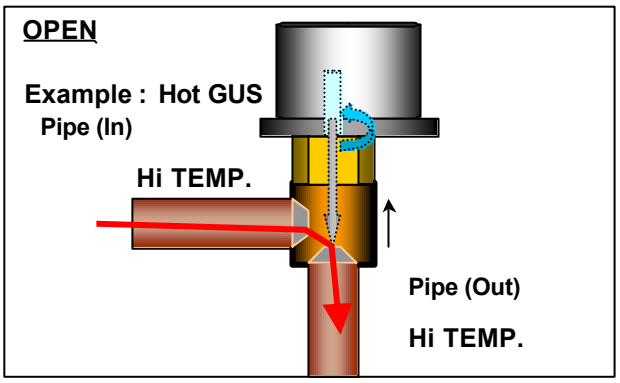

Check Point 7: Check clogging of strainer

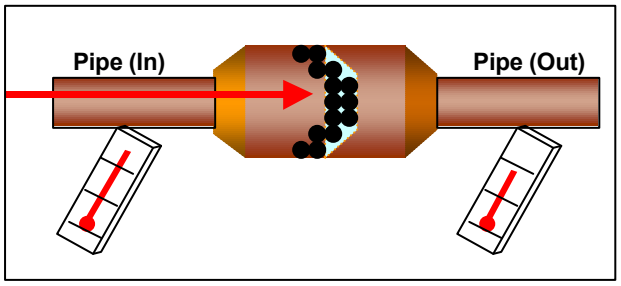

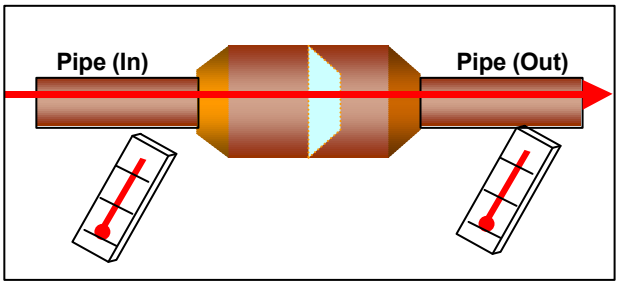

- If there is a temperature difference between Strainer terminals, there is a possibility of clogging .Check the temperature difference.

And check the movement of inside dirty by changing the operation mode from Cooling to Heating, or from Heating to Cooling.

SEVICE PARTS INFORMATION 12
4WAY VALVE

P/No. 9970035012 (4WAY VALVE)
P/No. 9900191016 (Solenoid COIL)

Check Point 1: Check Circuit connection

- **Check the connection of connector CN 6**

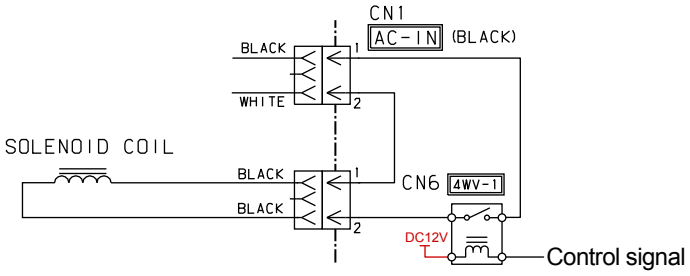

Check Point 2: Check Solenoid Coil

- **Remove CN6 from PCB and check the resistance value of coil**

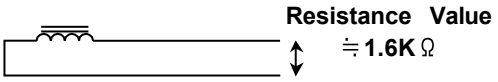

☆**If it is Open or abnormal resistance value, replace Solenoid Coil**

Check Point 3: Check Operation of 4 Way Valve

- **Check each piping temperature, and confirm the location of the valve by the temperature difference.**

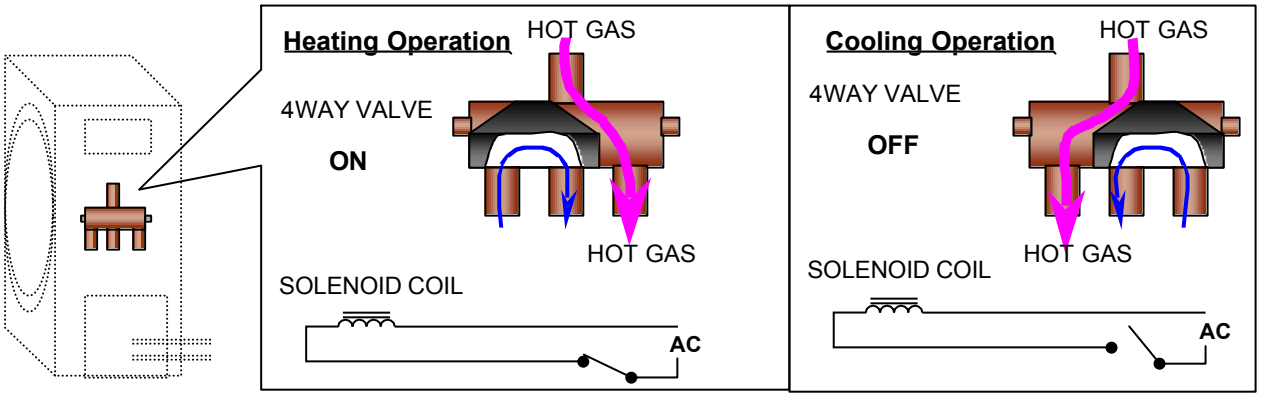

☆If the valve location is not proper, replace 4 way valve.

Check Point 4: Check Voltage of Solenoid Coil

- **If CN6 of Control PCB dose not Show 220V +-20 V during Heating operation (Compressor is in operation),replace Control PCB.**

SEVICE PARTS INFORMATION 13
Duct Type Indoor FAN Motor

Check Point **AR 7 , 9** **P/No. 9601722014**

- **Check each winding resistance of Motor**

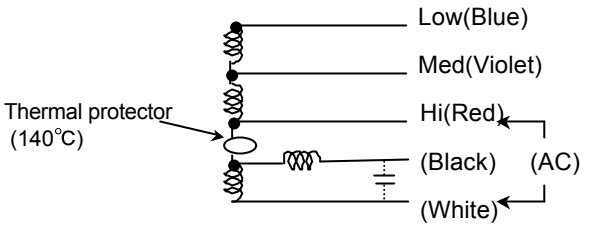

Read Wire	Resistance value(20℃)
White - Red	764.3±8% Ω
Red - Black	136.5±8% Ω
Red - Violet	68.2±8% Ω
Violet - Blue	68.2±8% Ω

Check Point **AR 12 , 14** **P/ No. 9601723011**

- **Check each winding resistance of Motor**

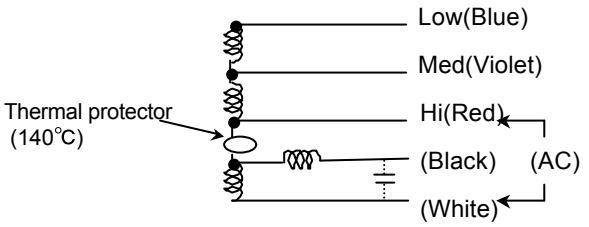

Read wire	Resistance value (20℃)
White - Red	597.2±8% Ω
Red - Black	192.7±8% Ω
Red - Violet	90.7±8% Ω
Violet - Blue	90.7±8% Ω

Check Point **AR 18 , 22** **P/ No. 9601723028**

- **Check each winding resistance of Motor**

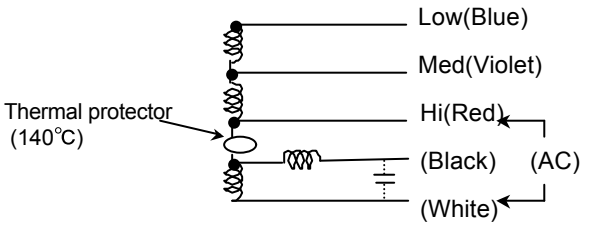

Read wire	Resistance value (20℃)
White - Red	210.2±8% Ω
Red - Black	176.7±8% Ω
Red - Violet	28.7±8% Ω
Violet - Blue	28.7±8% Ω

SEVICE PARTS INFORMATION 14
Cassette Type Indoor unit FAN Motor

Check Point AU 7 , 9 P/No. 9601040040

・Check each winding resistance of Motor

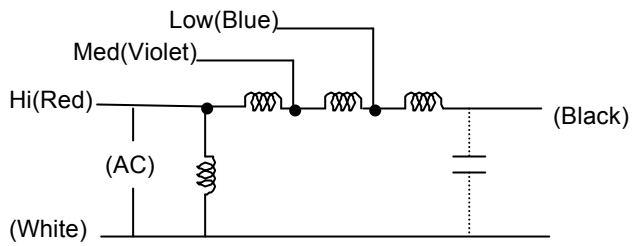

Read Wire	Resistance value(20℃)
White - Red	658±8% Ω
Red - Black	329±8% Ω
Red - Violet	99.6±8% Ω
Violet - Blue	99.6±8% Ω

Check Point AU 12 , 14 P/No. 9601040019

・Check each winding resistance of Motor

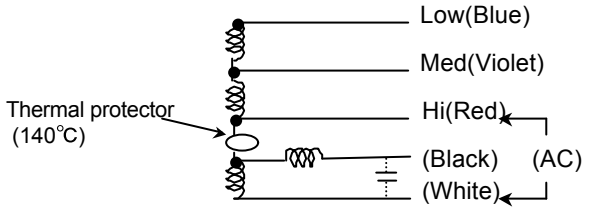

Read wire	Resistance value (20℃)
White - Red	455±8% Ω
Red - Black	541±8% Ω
Red - Violet	103±8% Ω
Violet - Blue	103±8% Ω

Check Point AU 18 P/No. 9601040026

・Check each winding resistance of Motor

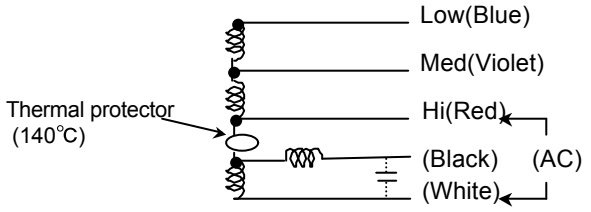

Read wire	Resistance value(20℃)
White - Red	446±8% Ω
Red - Black	552±8% Ω
Red - Violet	117±8% Ω
Violet - Blue	117±8% Ω

SEVICE PARTS INFORMATION 15
Wall Mounted type Indoor unit FAN Motor

Check Point AS7-14 9601172017

・**Check each winding resistance of Motor**

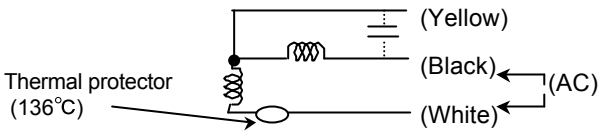

Read wire	Resistance value (20℃)
Black - Yellow	138±8% Ω
White - Yellow	136±8% Ω

Check Point AS18-24 9601388012

・**Check each winding resistance of Motor**

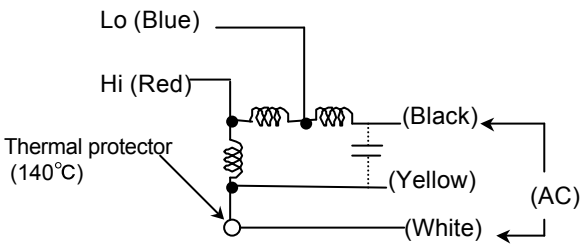

Read wire	Resistance value(20℃)
Red - White	129±8% Ω
Black - Blue	21±8% Ω
Blue - Red	277±8% Ω

Refrigerant
R410A

AIRSTAGE™

J SERIES

7 . INSTALLATION

7. INSTALLATION

7-1 ADDITIONAL CHARGE

(1) Pipe length

When adding refrigerant, follow the formula below.
Add the refrigerant according to the result.

Liquid pipe [in(mm)]	3/8 (9.52)	1/4 (6.35)
Additional refrigerant (kg/m)	0.06	0.02

The amount of additional charge C(kg)

C =	Total length of 3/8" (Ø9.52mm) liquid pipe	x 0.06 (kg/m)	+	Total length of 1/4" (Ø6.35mm) liquid pipe	x 0.02 (kg/m)	=	(1)
	m			m			
		kg			kg		

Example : When the liquid pipe length 3/8" (Ø9.52mm) = 35m,

1/4" (Ø6.35mm) = 20m

" Additional charge of pipe length " is

35(m) x 0.06(kg/m) + 20(m) x 0.02(kg/m) = 2.5(kg).....(1)

ADDITIONAL CHARGE = (1)

7-2 EXAMPLES OF SYSTEM SETTING

(1) Refrigerant system ①

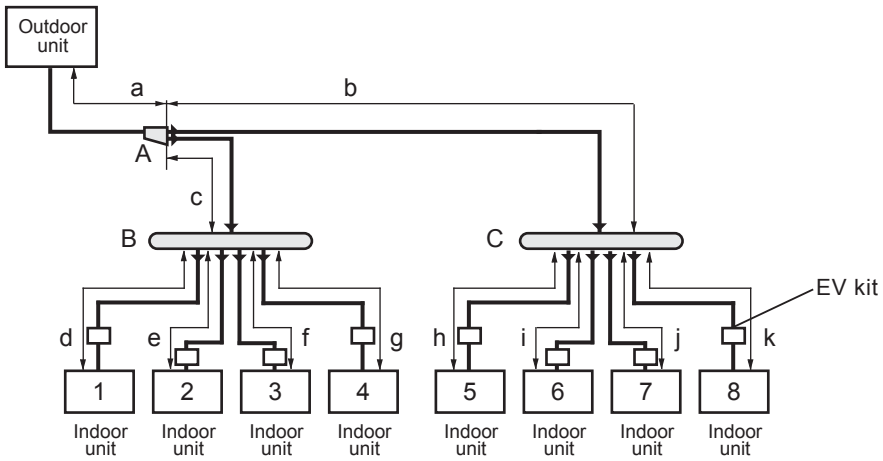

• System configuration

		1	2	3	4	5	6	7	8	Total capacity
Example 1		ARU7	ARU7	ARU7	ARU7	ARU7	ARU7	ARU7	ARU7	
Capacity	kW	2.15	2.15	2.15	2.15	2.15	2.15	2.15	2.15	17.2
	BTU/h	7,300	7,300	7,300	7,300	7,300	7,300	7,300	7,300	58,400
Example 2		ARU9	ARU9	ARU9	ARU9	ARU9	ARU12	ARU12	ARU12	
Capacity	kW	2.80	2.80	2.80	2.80	2.80	3.50	3.50	3.50	24.5
	BTU/h	9,600	9,600	9,600	9,600	9,600	11,900	11,900	11,900	83,700

Total indoor unit capacity (1 refrigerant system)
Example1 : Total capacity = 58,400(17.2) ≦ 72,000(21.2)
Example2 : Total capacity = 83,598(24.5) > 72,000(21.2)

※Example 2 cannot be selected

• Selection of pipe size (Example 1)

		a	b	c	d	e	f	g
Gas pipe	in.(mm)	3/4(19.05)	5/8(15.88)	5/8(15.88)	3/8(9.52)	3/8(9.52)	3/8(9.52)	3/8(9.52)
Liquid pipe		3/8(9.52)	3/8(9.52)	3/8(9.52)	1/4(6.35)	1/4(6.35)	1/4(6.35)	1/4(6.35)
Length Example 1	m	10	10	15.2	5.1	5.1	10	5.1

h	i	j	k
3/8(9.52)	3/8(9.52)	3/8(9.52)	3/8(9.52)
1/4(6.35)	1/4(6.35)	1/4(6.35)	1/4(6.35)
5.1	10	10	5.1

● Pipe length

Maximum allowable length (actual pipe length)		Refrigerant system 1	
Between outdoor unit and the farthest indoor unit	70m	a + b + h	25.2m
		a + b + i	30.0m
		a + b + j	30.0m
		a + b + k	25.1m
		a + c + d	30.3m
		a + c + e	30.3m
		a + c + f	35.2m
		a + c + g	30.3m
Total pipe length	115m	a + b + c + d + e + f + g + h + i + j + k	90.7m
Between outdoor unit and the 1st branch kit	60m	a	10.0m
Between the 1st branch kit and the farthest indoor unit	40m	b + h	15.1m
		b + i	20.0m
		b + j	20.0m
		b + k	15.1m
		c + d	20.3m
		c + e	20.3m
		c + f	25.2m
		c + g	20.3m
Between EV kit and indoor unit	Note	-	Within limit

Note: Note: Refer to the INSTALLATION MANUAL of EV kit.

Maximum allowable height difference		Refrigerant system 1	
Between outdoor unit and indoor unit	30m	-	Within limit
Between indoor units	5m	-	Within limit

● Selection of separation tube and header

	A	B	C
Model name	UTR-BP54U	UTR-HD546U	UTR-HD546U

● Additional charge

Liquid pipe	in.(mm)	3/8(9.52)	1/4(6.35)
Additional refrigerant	(kg/m)	0.06	0.02
Liquid pipe length	m	35.2	55.5

● Additional refrigerant

(0.06 x 35.2) + (0.02 x 55.5) = 3.222 (kg)

3.2kg

(2) Refrigerant system ②

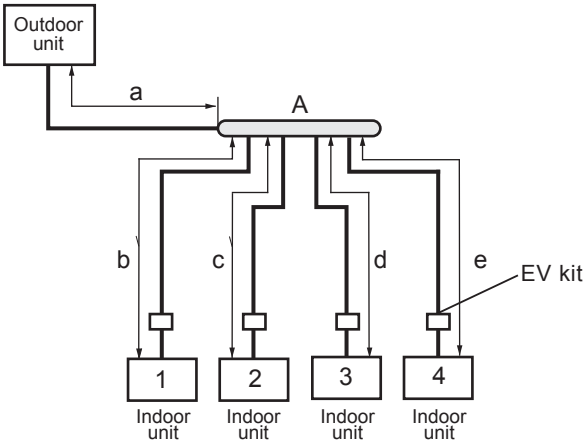

• System configuration

		1	2	3	4	Total capacity
Example 1		ARU12	ARU12	ARU18	ARU18	
Capacity	kW	3.5	3.5	5.3	5.3	17.6
	BTU/h	14,000	14,000	19,100	19,100	66200
Example 2		ARU18	ARU18	ARU25	ARU25	
Capacity	kW	5.3	5.3	7.05	7.05	24.7
	BTU/h	19,100	19,100	24,100	24,100	86400

Total capacity of indoor unit (1 refrigerant system)

Example1 : Total capacity = 66,200(18.3) ≦ 72,000(21.2)

Example2 : Total capacity = 86,400(23.3) > 72,000(21.2)

※Example 2 cannot selected.

• Selection of pipe size (Example 1)

		a	b	c	d	e
Gas pipe	in.(mm)	3/4(19.05)	1/2(12.70)	1/2(12.70)	5/8(15.88)	5/8(15.88)
Liquid pipe		3/8(9.52)	1/4(6.35)	1/4(6.35)	1/4(6.35)	1/4(6.35)
Length Example 1	m	20.1	15.2	10	10	15.2

Maximum allowable length (actual pipe length)		Refrigerant system 2	
Between outdoor unit and the farthest indoor unit	70m	a + b	35.3m
		a + c	30.1m
		a + d	30.1m
		a + e	35.3m
Total pipe length	115m	a + b + c + d + e	70.5m
Between outdoor unit and the 1st branch kit	60m	a	20.1m
Between the 1st branch kit and the farthest indoor unit	40m	b	15.2m
		c	10.0m
		d	10.0m
		e	15.2m
Between EV kit and indoor unit	Note	-	Within limit

Note: Note: Refer to the INSTALLATION MANUAL of EV kit.

Maximum allowable height difference		Refrigerant system 2	
Between outdoor unit and indoor unit	30m	-	Within limit
Between indoor units	5m	-	Within limit

• Selection of header

	A
Model name	UTR-HD546U

• Additional charge

Liquid pipe	in.(mm)	3/8(9.52)	1/4(6.35)
Additional refrigerant	(kg/m)	0.06	0.02
Liquid pipe length	m	20.1	50.4

• Additional refrigerant

(0.06 x 20.1) + (0.02 x 50.4) = 2.214 (kg)

2.2kg

(3) Refrigerant system ③

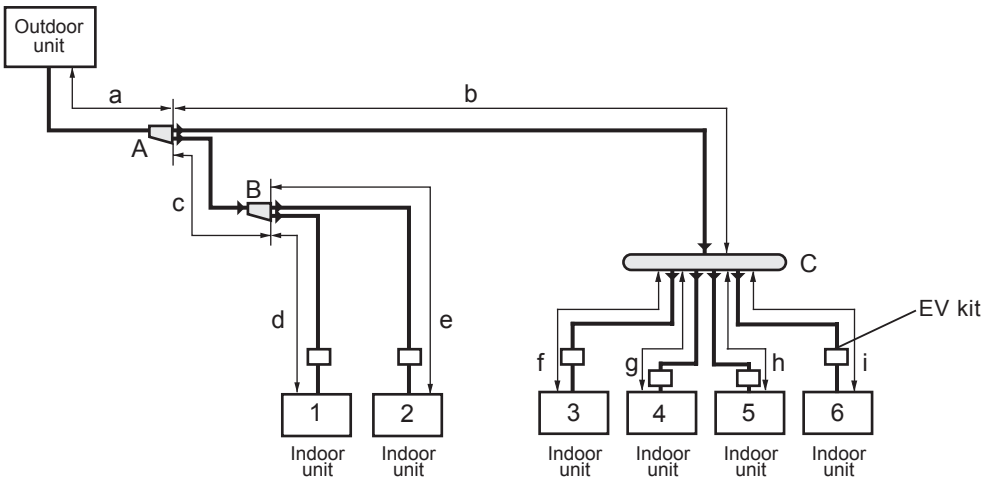

• System configuration

		1	2	3	4	5	6	Total capacity
Example 1		ARU12	ARU18	ARU9	ARU9	ARU9	ARU9	
Capacity	kW	3.5	5.3	2.8	2.8	2.8	2.8	20.0
	BTU/h	11,900	18,100	9,600	9,600	9,600	9,600	68,400
Example 2		ARU18	ARU18	ARU14	ARU14	ARU14	ARU14	
Capacity	kW	5.3	5.3	4.0	4.0	4.0	4.0	26.6
	BTU/h	18,100	18,100	13,700	13,700	13,700	13,700	91,000

Total capacity of indoor unit (1 refrigerant system)

Example1 : Total capacity = 68,400(20.0) ≦ 72,000(21.2)

Example2 : Total capacity = 91,000(26.8) ＞ 72,000(21.2)

※Example 2 cannot selected.

• Selection of pipe size (Example 1)

		a	b	c	d	e	f	g
Gas pipe	in.(mm)	3/4(19.05)	3/4(19.05)	5/8(15.88)	1/2(12.70)	5/8(15.88)	3/8(9.52)	3/8(9.52)
Liquid pipe		3/8(9.52)	3/8(9.52)	3/8(9.52)	1/4(6.35)	1/4(6.35)	1/4(6.35)	1/4(6.35)
Length Example 1	m	10	20.1	5.1	7	12.2	10	5.1

h	I
3/8(9.52)	3/8(9.52)
1/4(6.35)	1/4(6.35)
5.1	10

• Pipe length

Maximum allowable length (actual pipe length)		Refrigerant system 3	
Between outdoor unit and the farthest indoor unit	70m	a + b + f	40.1m
		a + b + g	35.2m
		a + b + h	35.2m
		a + b + I	40.1m
		a + c + d	22.1m
		a + c + e	27.3m
Total pipe length	115m	a + b + c + d + e + f + g + h + I	84.6m
Between outdoor unit and the 1st branch kit	60m	a	10.0m
Between the 1st branch kit and the farthest indoor unit	40m	b + f	30.1m
		b + g	25.2m
		b + h	25.2m
		b + I	30.1m
		c + d	12.1m
		c + e	17.3m
Between EV kit and indoor unit	Note	-	Within limit

Note: Refer to the INSTALLATION MANUAL of EV kit.

Maximum allowable height difference		Refrigerant system 3	
Between outdoor unit and indoor unit	30m	-	Within limit
Between indoor units	5m	-	Within limit

• Selection of separation tube and header

	A	B	C
Model name	UTR-BP54U	UTR-BP54U	UTR-HD546U

• Additional charge

Liquid pipe	in.(mm)	3/8(9.52)	1/4(6.35)
Additional refrigerant	(kg/m)	0.06	0.02
Liquid pipe length	ft.(m)	116.(35.2)	163.(49.4)

• Additional refrigerant

(0.06 x 35.2) + (0.02 x 49.4) = 3.1 (kg)

3.1kg

7-3 PRECAUTIONS FOR INSTALLATION

1. Preparing pipes

(1) Use the designated size (diameter & thickness) of refrigerant pipes.
(2) Those pipes purchased locally may contain dust inside. Please blow out the dust by dried inert gas when using.
(3) Be careful to avoid the dust or water falling into the pipe when performing piping process and piping installation.
(4) When processing the pipe, make the number of bending portion as few as possible, and the bending radius as large as possible.

(5) To process the branch, do not use T-shaped pipe, which causes an uneven refrigerant flow. Use the optionally available standard branch kit.
(6) If the diameter of the required pipe is different from the branch unit, either cut it out or use the reducer.

(7) Keep the permissible length of every piping limitation to prevent a defect or cooling/heating failure.
(8) When replacing the unit, never use piping which has been used for previous installations.
Only use the new piping.

Diameter and thickness of copper pipes is shown below.

Nominal diameter (inch)	Outer diameter (mm)	Thickness (mm)
1/4	ø 6.35	0.8
3/8	ø 9.52	0.8
1/2	ø 12.70	0.8
5/8	ø 15.88	1.0
3/4	ø 19.05	1.2

Material: JIS H3300 C1220T-O or equivalent
Allowable tensile stress ≧ 33 (N/mm^2)

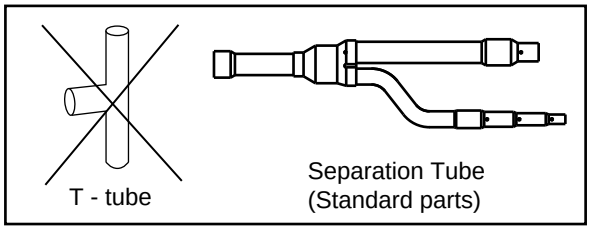

2. Flare connection

(1) Confirm that there are not scratches or waster, etc., on the flare and union surface.
(2) When using lubrication oil on the inside and outside of flare, always use small amount and must the same lubrication oil as used in the refrigerant circuit. Use of different oil will cause the lubrication oil to deteriorate and a compressor failure. Also too much oil may introduce water inside refrigerant circuit because the synthetic oil is highly hygroscopic.

Flare nut tightening torque

Nominal diameter (inch)	Tightening Torque
1/4	14.0 to 18.0 N·m
3/8	33.0 to 42.0 N·m
1/2	50.0 to 62.0 N·m
5/8	63.0 to 77.0 N·m
3/4	80.0 to 98.0 N·m

3. Brazing work

Brazing work must be carried out while blowing dry nitrogen gas through the pipes, so that an oxidized layer does not form on the inner surface of the pipes.

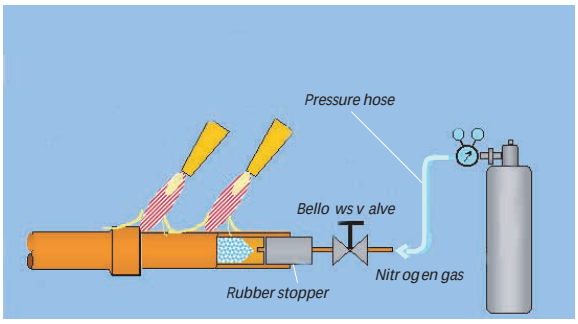

Example) Inside state of welded pipe section

Nitrogen Gas is used

Nitrogen Gas is used but not sufficient (Oxygen gas still exists inside the pipe)

Nitrogen Gas is not used

4. Tightness test

(1) After completing all piping connection, always carry out an air tight test to check and confirm that there is no gas leakage. Charge the piping with nitrogen to within the sealing test pressure (600psi , 4.15 MPa). After 24 hours, check that the pressure has not fallen. Make sure to add the pressure to both gas and liquid pipe. Perform the leak test on all flared and brazed parts.

Note: When the ambient temperature changes 5 degC , the test pressure changes 10psi (0.07MPa).

(2) After tightness test, please insulate the connecting portion, apply the enough insulation to avoid any gap.

5. Vacuum process

(1) Do not purge the air with refrigerant but use a vacuum pump to remove air from the indoor units and connection pipes!
(2) Remove the cap, and connect the gauge manifold and the vacuum pump to the charging valve by the service hoses.
(3) Vacuum the indoor unit and the connecting pipes until the pressure gauge indicates -76 cmHg.
(4) When -76 cmHg is reached, operate the vacuum pump for at least 1 hour.
(5) If necessary, add the refrigerant for the appropriate amount after the vacuum process is completed (Refer to next page "ADDITIONAL CHARGE").
(6) Disconnect the service hoses and fit the cap to the charging valve.
(7) Remove the blank caps, and fully open the spindles of the 3-way valves with a hexagon wrench.
(8) Tighten the blank caps of the 3-way valves to the specified torque.

	Blank cap	Charging cap
Liquid pipe (3-way valve)	19.6 to 24.5 N·m	10 to 12 N·m
Gas pipe (3-way valve)	34.3 to 39.4 N·m	10 to 12 N·m

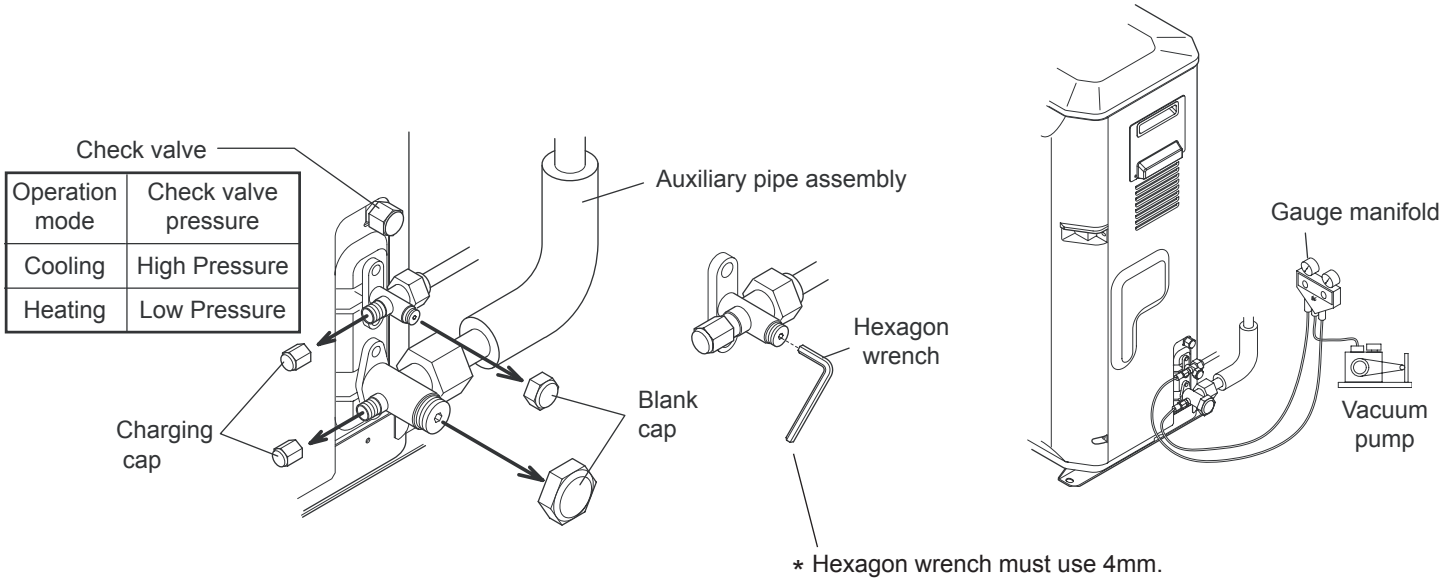

6. Additional charge

(1) Be careful, don't charge with wrong refrigerant!
(2) When moving and installing the air conditioner, do not mix gas other than the specified refrigerant inside the refrigerant circuit.
(3) When charging the refrigerant, always use an electronic balance for refrigerant charging. (to measure the refrigerant by weight)
(4) Always charge from the liquid phase side whose composition is stable.
(5) Always add the refrigerant for the appropriate amount. (For the calculation method, please refer to 7-1"ADDITIONAL CHARGE")
(6) Either larger or smaller refrigerant charge amount leads to the cause of trouble.
(7) For after service purpose, the added refrigerant charge amount and the calculation shall be indicated firmly on the service label over the side panel.

7-4 PUMP DOWN METHOD

7-4-1 PROCEDURE OF THE PUMP DOWN

Refer to the following pump down procedure.

(1) Stop the indoor and outdoor units.

(2) Close the liquid pipe valve using Hexagon wrench.

(3) Select Dip SW 1-3 in the outdoor unit PC board from OFF to ON, so that the pump down operation starts automatically in 40 seconds.

(4) If the pump down operation normally complete, the LED on PCB of outdoor unit will light and flash to inform you the completion of the pump down operation.

(5) After you confirm the display type of the LED, please close the gas pipe valve and then set the DIP SW1-3 from ON to OFF immediately.

7-4-2 A FLOW CHART OF PUMP DOWN

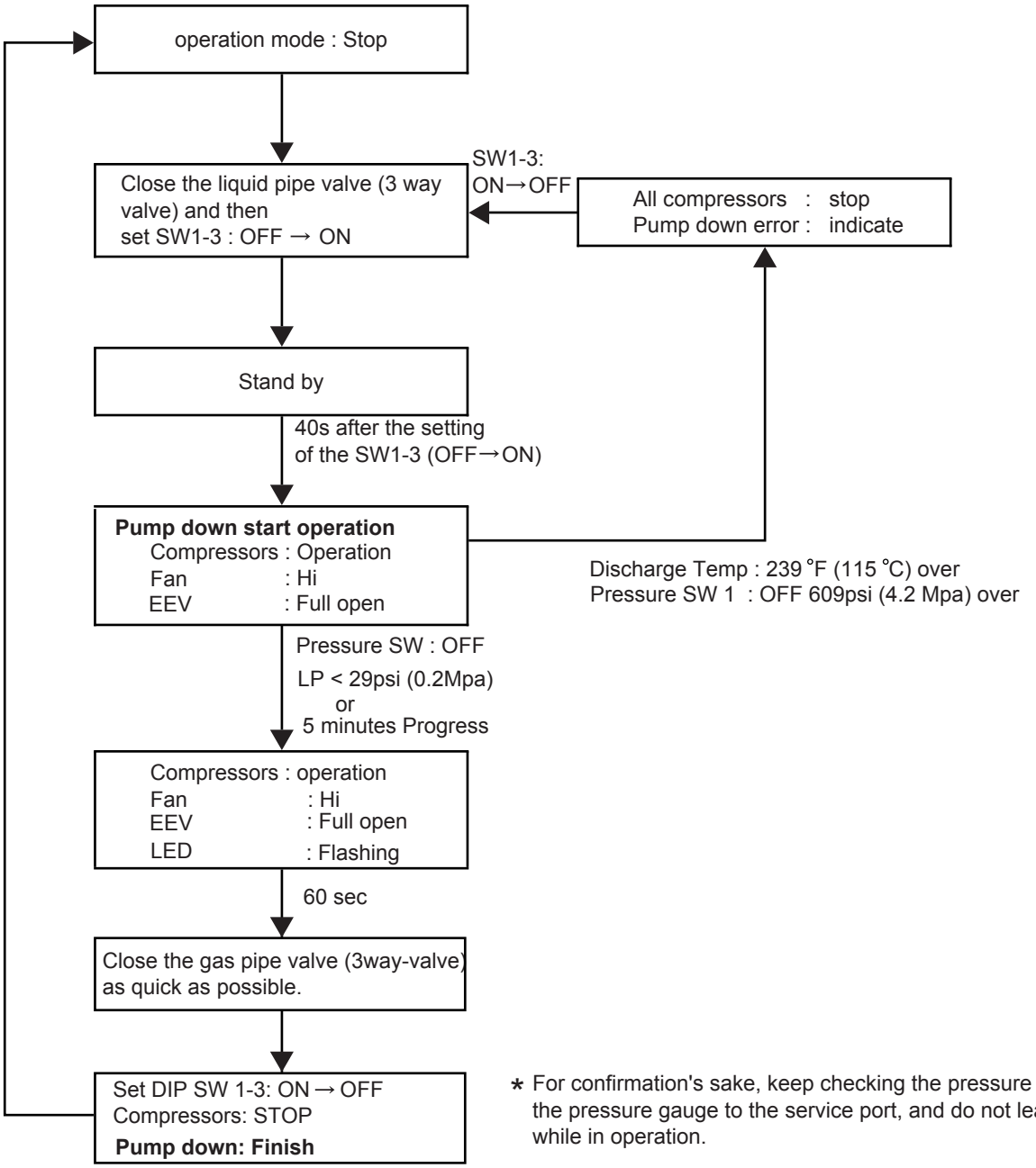

* For confirmation's sake, keep checking the pressure by attaching the pressure gauge to the service port, and do not leave the site while in operation.

* Depending on the amount of refrigerant and circumference temperature of a system, it may be unrecoverable.

Refrigerant
R410A

AIRSTAGE™

J SERIES

8 . REFRIGERANT CAUTION -R410A-

8. REFRIGERANT CAUTION -R410A-

8-1 R410A TOOLS

This air conditioner used R410A.
For installation and servicing, it is necessary to prepare the tools and machines that are different from the previous refrigerant.

◎ **Mark shows the exclusive use for R410A.**

◎ **Gauge manifold . . . . . (Fig.4-1)**
The specification of the gauge is different due to higher pressure.
The size of connection pipe is also different to prevent misuse.

◎ **Charge hose . . . . . (Fig.4-2)**
Since the normal pressure is high, the connection pipe size is also different.

◎ **Refrigerant cylinder . . . . . (Fig.4-3)**
Confirm the refrigerant type before charging. Always charge liquid-phase refrigerant.

Electronic balance for refrigerant charging . . . . . (Fig.4-4)
Electronic balance is recommended as in the case of R410A.

◎ **Vacuum pump with adapter to prevent reverse flow . . . . . .(Fig.4-5)**
Conventional pump can be used.

Vacuum holder . . . . . (Fig.4-6)
Conventional pump can be used if adapter for preventing vacuum pump oil from flowing back is used.

◎ **Gas leakage tester . . . . . (Fig.4-7)**
Exclusive for HFC

Refrigerant cleaner . . . . . (Fig.4-8)
Brown paint as designated by the ARI, USA

◎ **Flare tool . . . . . (Fig.4-9)**
The shape of flare is different for high pressure condition.

◎ **Torque wrench . . . . . (Fig.4-10)**
On both Φ12.7 and Φ15.88mm flare nut the size of the nut is made bigger.

◎ **Refrigerant recovering equipment (Collector) . . . . . (Fig.4-11)**
The type which can be used for any refrigerant is available

Nitrogen cylinder . . . . . (Fig.4-12)
This prevents an oxide film from forming in the pipe silver-alloy brazing work by turning the air out of the pipe and preventing the inside combustion.

◎ **Safety charger . . . . . (Fig.4-13)**
It is always compulsory to change the liquid, because R410A is a mixed refrigerant and there is some fear that a mixing ratio changes. In order to avoid the refrigerant from returning to the compressor in a liquid state, the refrigerant can be charged instead of giving a load to the compressor with a safety charger.

Control valve . . . . . (Fig.4-14)
The control valve prevents the refrigerant from spouting when it is removed, as the charging hose side and the service port side are possible to open and close at the same time.

Thermistor vacuum gauge . . . . . (Fig.4-15)
To remove moisture from the refrigerating cycle completely, it is necessary to perform appropriate vacuum drying. For that reason, vacuum conditions can be confirmed certainly.

Vacuum valve . . . . . (Fig.4-16)
This valve builts in a check valve, and it is easily possible to vacuum a refrigerating cycle or check for degree of vacuum with it.

TOOLS AND EQUIPMENT (R410A)

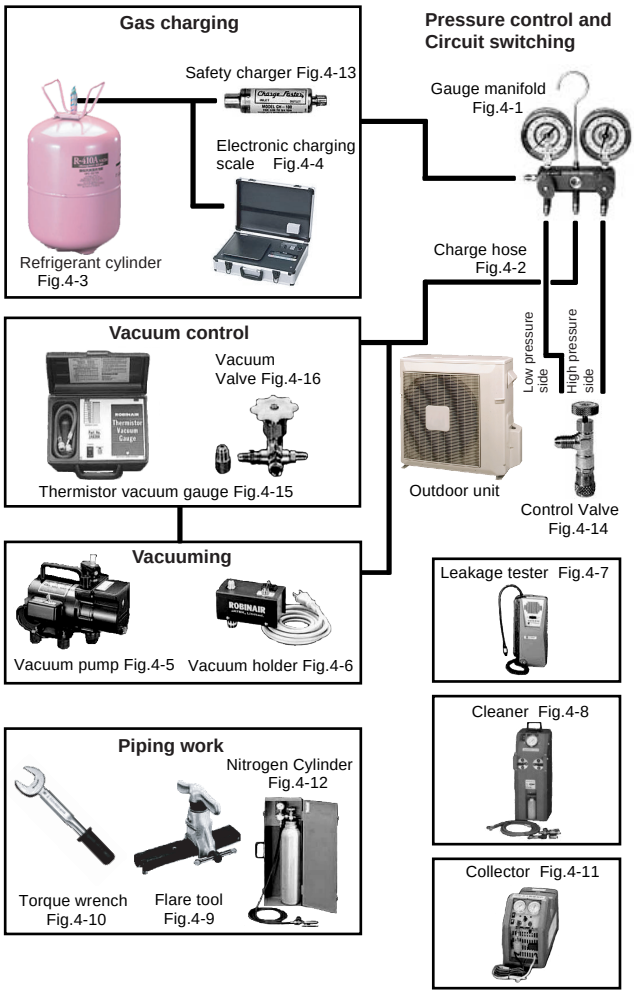

＊1 Gauge Manifold

	R410A	R22, R407C
High pressure gauge	-0.1～5.3 Mpa	-0.1～3.5 Mpa
Compond gauge	-0.1～3.8 Mpa	-0.1～1.7 Mpa
Port size	1/2UNF 5/16"	7/16UNF 1/4"

＊2 Charge hose

	R410A	R22, R407C
Normal pressure	5.08 Mpa	3.4 Mpa
Breaking pressure	25.4 Mpa	17.2 Mpa
Port size	1/2UNF	7/16UNF

8-2 PRECAUTION FOR INSTALLATION

Precaution for installation

Pipe diameter, recommended material and wall thickness

Nominal diameter (in.)	1/4	3/8	1/2	5/8	3/4
Outside diameter (mm)	6.35	9.52	12.70	15.88	19.05
Material	ASTM B280; JIS H3300 C1220T-O or equivalent 1)				
Wall thickness in. (mm)	0.8	0.8	0.8	1.0	1.2

1) : Allowable tensile stress ≧ (33 N/mm^2 at 125°C).

The pipe must be properly pressure rated for R410A
The pipe must be an air-conditioning refrigerant pipe.

Flare and flare nuts

Outer diameter of pipe d In. (mm)	Flare nut width L1 mm	Dimension A , inch (mm)		Dimension D ,mm tolerance (+0 (0.0 mm) -1/64 (-0.4 mm))
		Flare tool for R410A (Clutch type)	Flare tool for R22 (Clutch type)	
1/4 (6.35)	17	0 to 1/64 (0 to 0.5)	3/64 to 1/16 (1.0 to 1.5)	9.1
3/8 (9.52)	22	0 to 1/64 (0 to 0.5)	3/64 to 1/16 (1.0 to 1.5)	13.2
1/2 (12.70)	26	0 to 1/64 (0 to 0.5)	3/64 to 1/16 (1.0 to 1.5)	16.6
5/8 (15.88)	29	0 to 1/64 (0 to 0.5)	3/64 to 1/16 (1.0 to 1.5)	19.7
3/4 (19.05)	36	0 to 1/64 (0 to 0.5)	3/64 to 1/16 (1.0 to 1.5)	24.0

Flare nut width

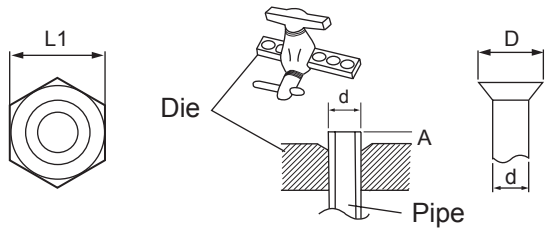

Do not use existing (for R22) pipes

- Be sure to use new pipes when replacing conventional (R22) model with HFC (R407C, R410A) model.

- If you use existing pipes, it may cause resolution of compressor oil by remaining mineral oil.

Be careful not to mix moisture and contamination into the pipe

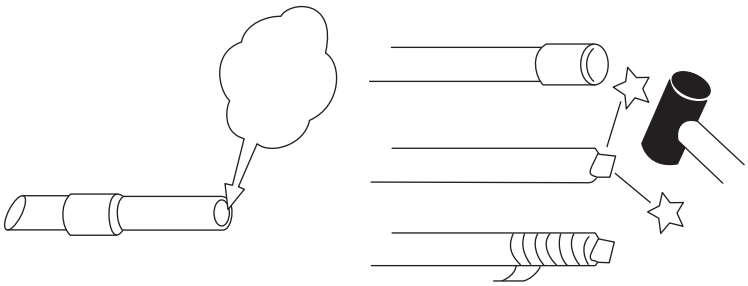

Moisture and contamination in the pipe is a cause of trouble.

Air purge

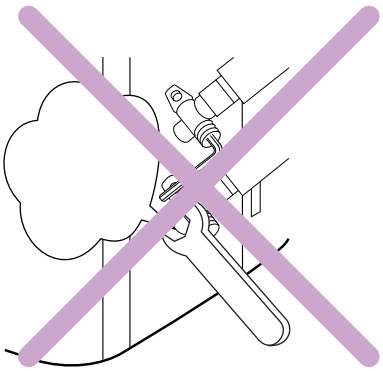

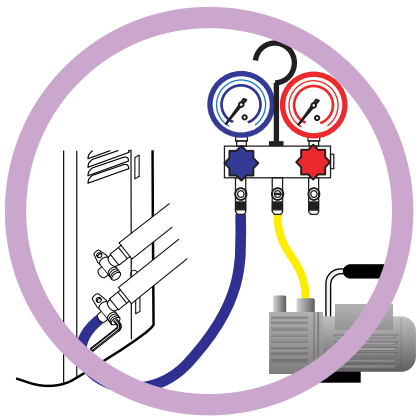

Always use a vacuum pump to purge air.

Refrigerant charge

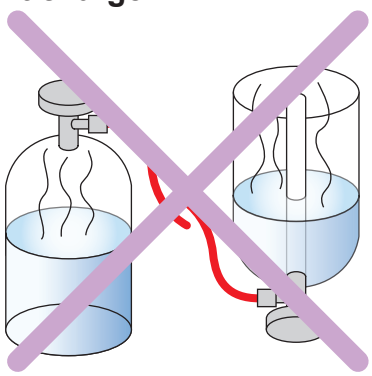

Don't charge from the gas phase side.

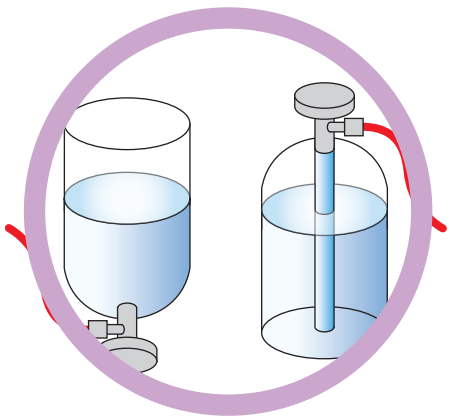

Do it always from the liquid phase side.

Compressor oil is changed

- We developed new synthetic oil, since HFC refrigerant doesn't dissolve in mineral (for R22)oil.
- Be careful to handle synthetic oil, since it resolves easily by moisture and contamination.
- Don't mix new synthetic oil and mineral oil. It may cause trouble.

8-3 PRECAUTION FOR SERVICING

Feature 1 Refrigerant oil is different from before.

Refrigerant oil for New Refrigerant	Different point from previous one	Precaution on Tools
Synthetic oil **Ether** **Esther** **※Previously it was mineral oil.**	• **Absorbent character is high.** • **Contamination occurs when mixed withe other kind of oil.**	• **Use the gauge manifold and charge hose for New Refrigerant(HFC), which shall be segregated from those of R22.** • **Attach the stop valve on the vacuum pump and avoid the oil from reverse frow.** • **It is necessary to use the vacuum pump which can obtain the high vacuum condition.**

R410A **R22**

Feature 2 New Refrigerant has Approx 1.6 times higher pressure than previous refrigerant.

R410A	Different point from previous one	Precaution on Tools
High Pressure ※ 1.6 times of R22.	• **Diameter of Service port has been changed from 1/4 Flare to 5/16 Flare.** • **JIS standard of flare process It became lager** • **To keep thethickness of copper tube. (1/4,3/8=more than 0.8mm)**	• **It requires the gauge manifold and charge hose exclusively for R410A.** • **It requires the flare tool and torque wrench that satisfies New JIS standard.** ※ Previous flare tool + flare adapter can be used as well.

8-4 NEW REFRIGERANT R410A

8-4-1 WHAT IS HFC?

Phase-out schedule of HCFC according to Montreal protocol

100% = (HCFC consumption of 1989) + (CFC consumption of 1989) x 2.8%

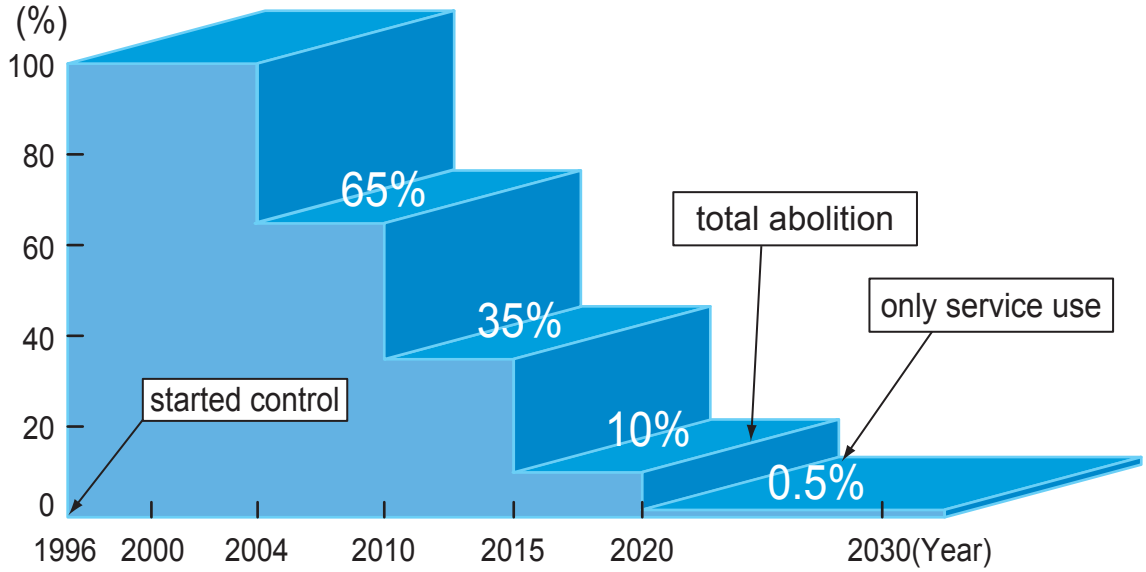

Ozone Layer depleting mechanism

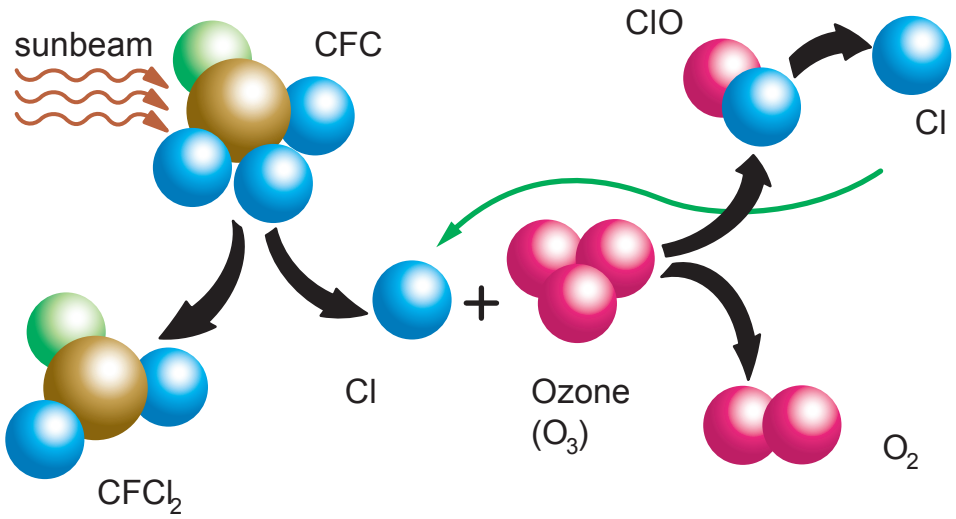

What is CFC and HCFC?

CFC : Chloro-Fluoro-Carbon

High ODP(ozone depletion potential) chemical compound, including chlorine. (ODP:0.6-1.0)
For example : R12 (for refrigerator and car air-conditioner)

HCFC : Hydro-Chloro-Fluoro-Carbon

Low ODP chemical compound, including chlorine and hydrogen. (ODP:0.02-01)
For example : R22 (for air-conditioner)

HFC_3 : Hydro-Fluoro-Carbon

R134a (for Car air conditioner)
R407C (for air conditioner)

Refrigerant characteristics

	R410A	R407C	R22
Composition (wt%)	R32/R125 (50/50)	R32/R125/R134a (23/25/52)	R22 (100)
Boiling Point	- 51.4	- 43.6	- 40.8
Behavior	near azeotrope	zeotrope	---
Pressure at 54.5 ℃ (kPa)	3,406	2,262	2,151
Temperature Glide (deg)	0.11	5.4	0
ODP	0	0	0.055

Summary of R407C and R410A characteristics

	R410A	R407C
Advantage	• Higher system performance • Near-Azeotropic refrigerant	• Similar pressure as R22 (possible to design large equipment)
Disadvantage	• 1.6 times higher pressure than R22 (difficult to design against pressure resistance)	• Zeotropic refrigerant (handle with care)

8-4-2 DESIGNED PRESSURE OF R410A REFRIGERANT

Relation between R410A condensing temperature and saturated pressure.

< Pressure →Temp >

Pressure		Temperature
(Mpa)	(psi)	(℃)
2.20	319	37.9
2.25	326	38.7
2.30	334	39.6
2.35	341	40.5
2.40	348	41.3
2.45	355	42.1
2.55	370	43.8
2.60	377	44.6
2.65	384	45.3
2.70	392	46.1
2.75	399	46.8
2.80	406	47.6
2.85	413	48.3
2.90	421	49.0
2.95	428	49.8
3.00	435	50.5
3.05	442	51.2
3.10	450	51.9
3.15	457	52.6
3.20	464	53.2
3.25	471	53.9
3.30	479	54.6
3.35	486	55.3
3.40	493	55.9
3.45	500	56.5
3.50	508	57.1
3.55	515	57.8
3.60	522	58.4
3.65	529	59.0
3.70	537	59.6
3.75	544	60.2
3.80	551	60.8
3.85	558	61.4
3.90	566	52.0
3.95	573	62.5
4.00	580	63.1
4.05	587	63.6
4.10	595	64.2
4.15	602	64.8

< Temp→Pressure >

Temperature	Pressure	
(℃)	(MPa)	(psi)
39	2.27	329
40	2.32	336
41	2.38	345
42	2.44	354
44	2.57	373
45	2.63	381
46	2.69	390
47	2.76	400
48	2.83	410
49	2.90	421
51	3.04	441
52	3.11	451
53	3.18	461
54	3.26	473
56	3.41	495
57	3.49	506
58	3.57	518
59	3.65	529
61	3.82	554
62	3.90	566
63	3.99	579
64	4.08	592

8-5 DEFFERENCE FROM CONVENTIONAL MODEL (R22) AND PRECAUTIONS

OIL

- Use new synthetic oils such as ester because HFC series refrigerant has less solubility with mineral oils conventionally used for R22.
- As these new synthetic oils are easily influenced by moisture and dusts, they must be treated more carefully than the conventional lubricating oils.

CAUTION

For installation/servicing, take more precautions than the case of conventional refrigerants to avoid moisture and dusts entering the refrigerant circuit. Also, for storing parts, more precautions must be taken.

COMPRESSOR

- Use better grade of material for sliding parts for securing good lubrication of sliding part as HFC refrigerant does not contain chloride.
- Review insulating materials
- Increase pressure resistance strength

CAUTION

Check if the compressor is suitable for the refrigerant (model) when replacing. Complete welding within 15 minutes after opening the cap when replacing.

HEAT EXCHANGER

- Review the water,contaminants controlling level
- Use thinner tube to increase pressure Increase capacity for resistance strength improving performance

CAUTION

During storage, due care must be taken so that foreign matters such as dust and water do not enter.

4-WAY VALVE

- Review materials

CAUTION

Check if the valve is suitable for the refrigerant (model) when replacing.

CHECK VALVE

- Review materials
- Change shape of pipe ends to increase pressure resistance strength

CAUTION

Check if the valve is suitable for the refrigerant (model) when replacing.

3-WAY VALVE

- Review material O-ring, valve core seal for securing suitability with oil.

CAUTION

Check if the valve is suitable for the refrigerant (model) when replacing.

OTHER PIPING

- Review the water, contaminants controlling level.
- Review thickness of pipes.

CAUTION

During storage, due care must be taken so that foreign matters such as dust and water do not enter.

Refrigerant
R410A

AIRSTAGE™

J SERIES

9 . APPENDING DATA

9. APPENDING

9-1 REFRIGERANT PIPE SYSTEM DIAGRAM

■ HEAT PUMP TYPE

- **MODEL : AO54UJ**

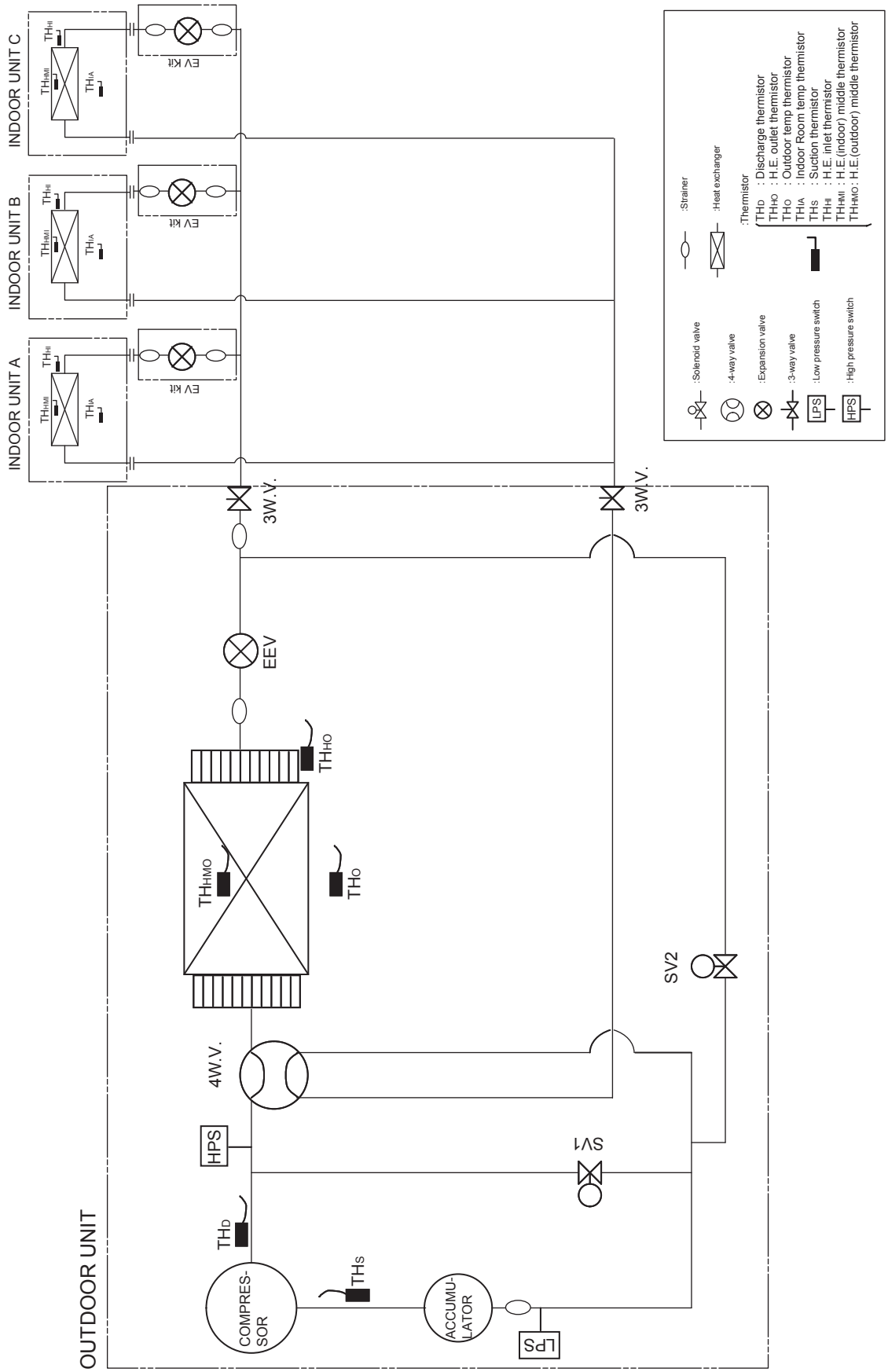

■ COOLING ONLY TYPE

- **MODEL : AO54FJ**

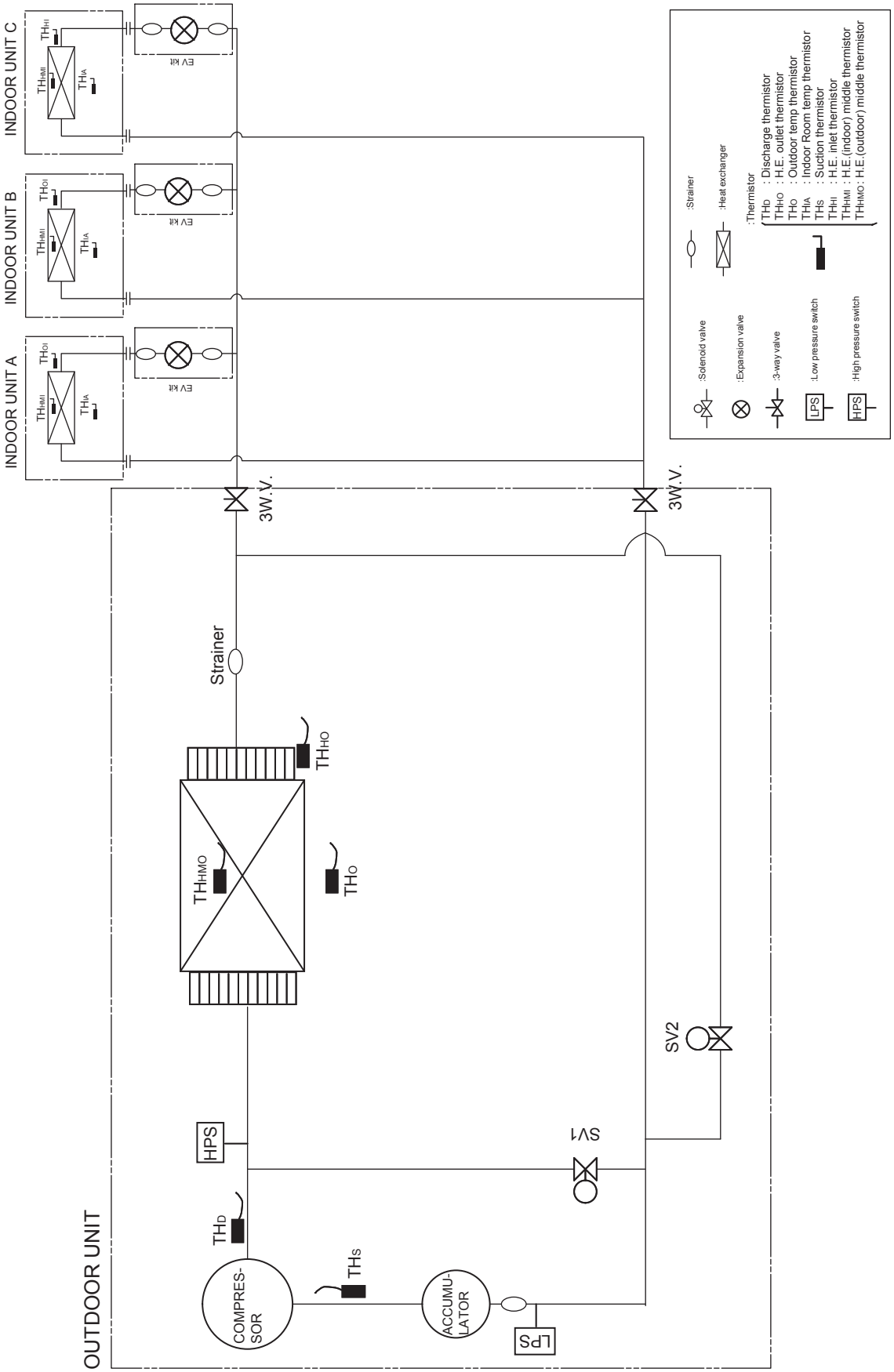

9-2 CHARACTERISTICS OF SENSORS

9-2-1 THERMISTOR

Thermistor resistance values <Indoor unit side>

1) Room temperature thermistor (TH_{IA})

Room temperature (°C)	0	2.5	5	7.5	10	12.5	15	17.5	20	22.5	25	27.5	30
Resistance value (kΩ)	33.6	29.5	25.9	22.8	20.2	17.9	15.8	14.1	12.5	11.2	10.0	9.0	8.0

Room temperature (°C)	32.5	35	37.5	40	42.5	45	47.5	50
Resistance value (kΩ)	7.2	6.5	5.9	5.3	4.8	4.3	3.9	3.6

2) Indoor heat exchanger temperature thermistor(TH_{HM},TH_{HI})

Heat exchanger temperature (°C)	0	2.5	5	7.5	10	12.5	15	17.5	20	22.5	25	27.5	30
Resistance value (kΩ)	176.0	153.5	134.2	117.6	103.3	91.0	80.3	71.0	62.9	55.9	49.7	44.3	39.6

Heat exchanger temperature (°C)	32.5	35	37.5	40	42.5	45	47.5	50	52.5	55	57.5	60
Resistance value (kΩ)	35.4	31.7	28.5	25.6	23.1	20.8	18.8	17.1	15.5	14.1	12.8	11.6

Thermistor resistance values <Outdoor unit side>

1) Outdoor heat exchanger outlet and middle thermistor (TH_{HO}, TH_{HMO}) and suction temperature thermistor(TH_S)

Pipe temperature (°C)	-50	-40	-30	-20	-10	-7.5	-5.0	-2.5	0	2.5	5.0	7.5	10
Resistance value (kΩ)	384.8	182.8	92.3	49.2	27.5	24.0	20.9	18.3	16.1	14.1	12.4	11.0	9.7

Pipe temperature (°C)	12.5	15.0	17.5	20	22.5	25.0	27.5	30	32.5	35	37.5	40	50
Resistance value (kΩ)	8.6	7.7	6.8	6.1	5.5	4.9	4.4	3.9	3.6	3.2	2.9	2.6	1.8

Pipe temperature (°C)	60	70	80	90	100
Resistance value (kΩ)	1.2	0.9	0.6	0.5	0.4

2) Discharge temperature thermistor (TH_D)

Pipe temperature (°C)	-40	-30	-20	-10	0	5.0	10	12.5	15	17.5	20	22.5	25
Resistance value (kΩ)	2183	1076	561	307	176	135	105	92.4	81.8	72.6	64.5	57.5	51.3

Pipe temperature (°C)	27.5	30	32.5	35	37.5	40	50	60	70	80	90	100	120
Resistance value (kΩ)	45.8	41.1	36.9	33.1	29.8	26.9	18.1	12.5	8.8	6.3	4.6	3.4	2.0

Pipe temperature (°C)	140	160	180
Resistance value (kΩ)	1.2	0.8	0.5

3) Outdoor temperature thermistor (THo)

Pipe temperature (°C)	-50	-40	-30	-20	-10	-7.5	-5.0	-2.5	0	2.5	5.0	8.0	10
Resistance value (kΩ)	859	402	200	105	58.2	50.6	44.0	38.4	33.6	29.5	25.9	22.3	20.2

Pipe temperature (°C)	12.5	15	17.5	20	22.5	25	27.5	30	32.5	35	37.5	40	50
Resistance value (kΩ)	17.9	15.8	14.1	12.5	11.2	10.0	9.0	8.0	7.2	6.5	5.9	5.3	3.6

Pipe temperature (°C)	60	70	80
Resistance value (kΩ)	2.5	1.8	1.3

9-2-2 PRESSURE SENSOR

(1) Pressure Switch 1 High Pressure Side

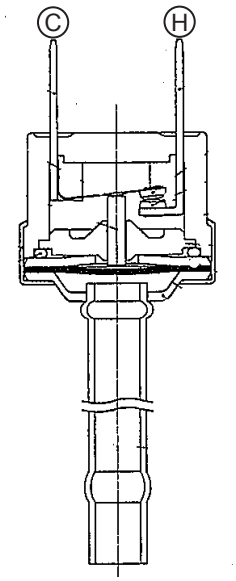

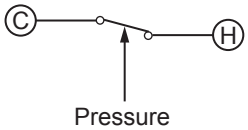

Circuit OFF(Open)	4.2±0.1 Mpa
Circuit ON (Short)	3.2±0.15 Mpa

When the high pressure inside the system rises excessively the circuit is cut off and the abnormal protection functions.
(Normally the circuit is shorted)

(2) Pressure Switch 2 Low Pressure Side

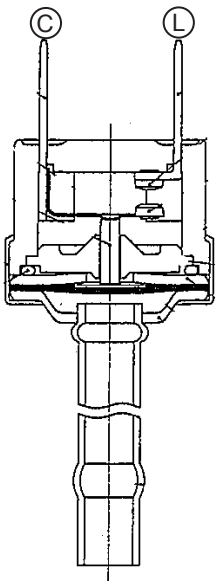

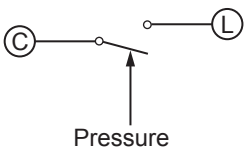

Circuit OFF(Open)	0.2±0.05 Mpa
Circuit ON (Short)	0.35±0.05 Mpa

When the low pressure inside the system decreases excessively the circuit is cut off and the abnormal protection functions.
(Normally the circuit is shorted)

9-3 WIRING DIAGRAM

9-3-1 INDOOR UNIT

COMPACT DUCT TYPE

■MODELS : AR7, AR9, AR12, AR14, AR18, AR22

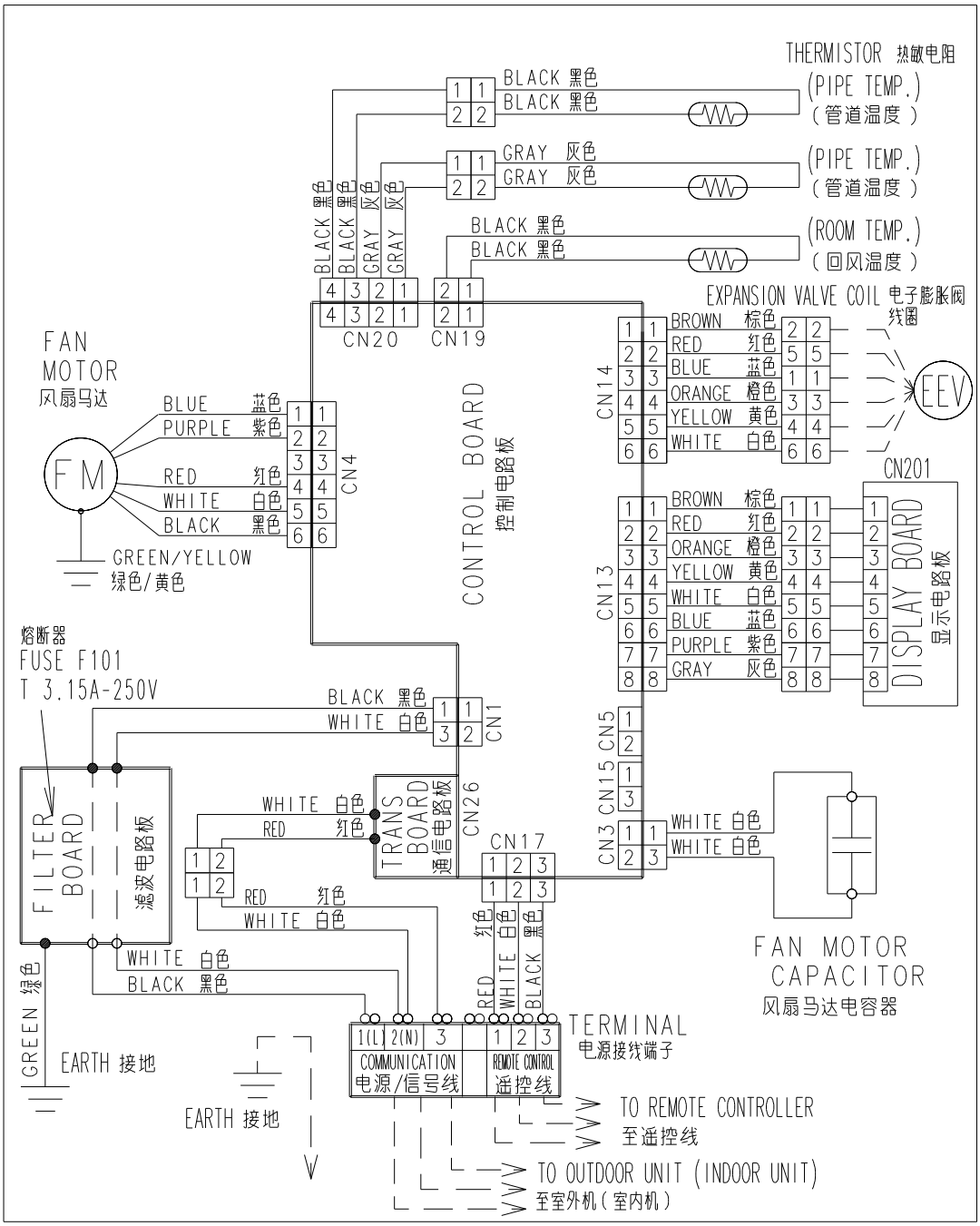

■MODELS : AR25, AR30

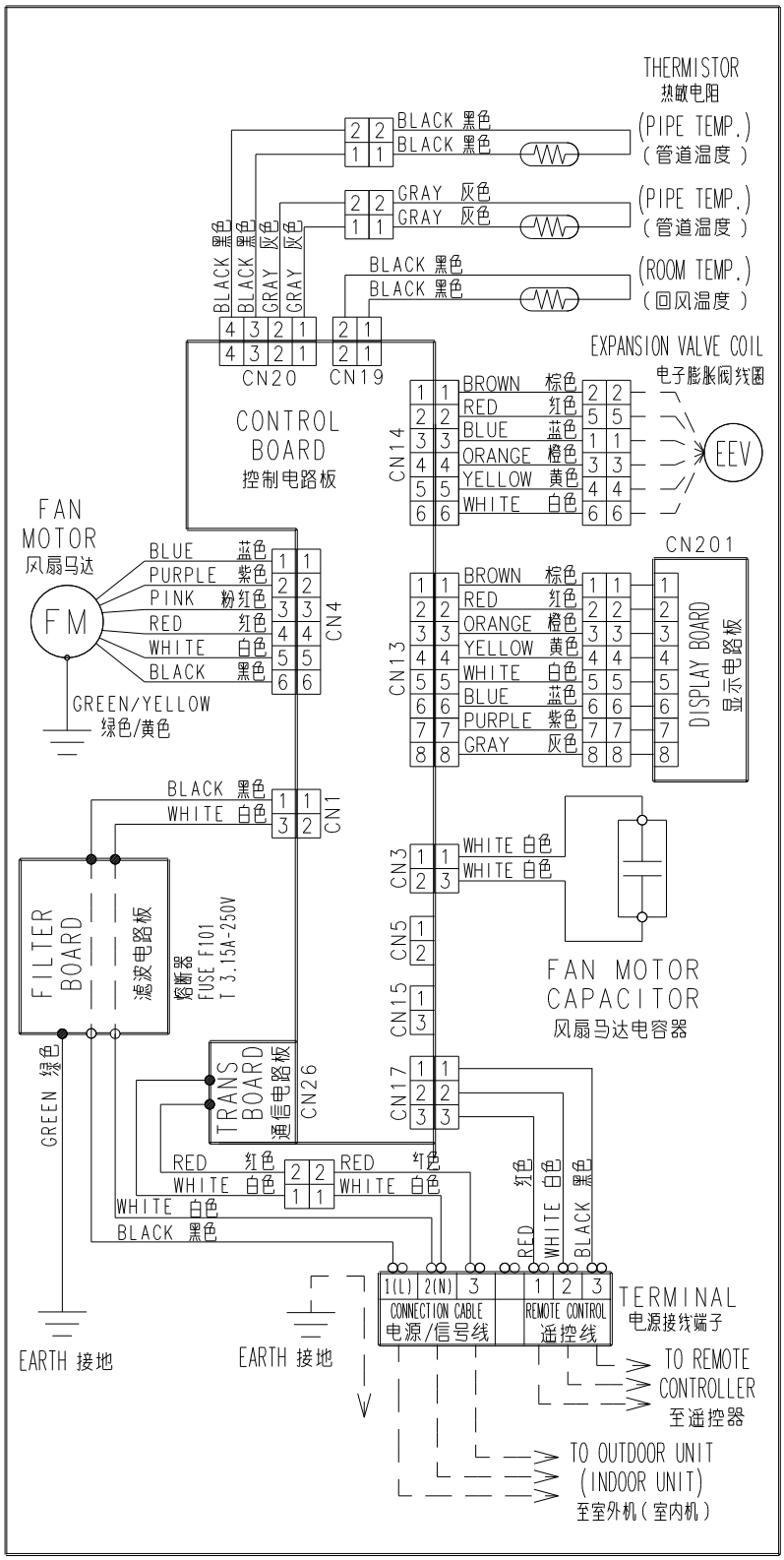

■MODELS : AR36, AR45

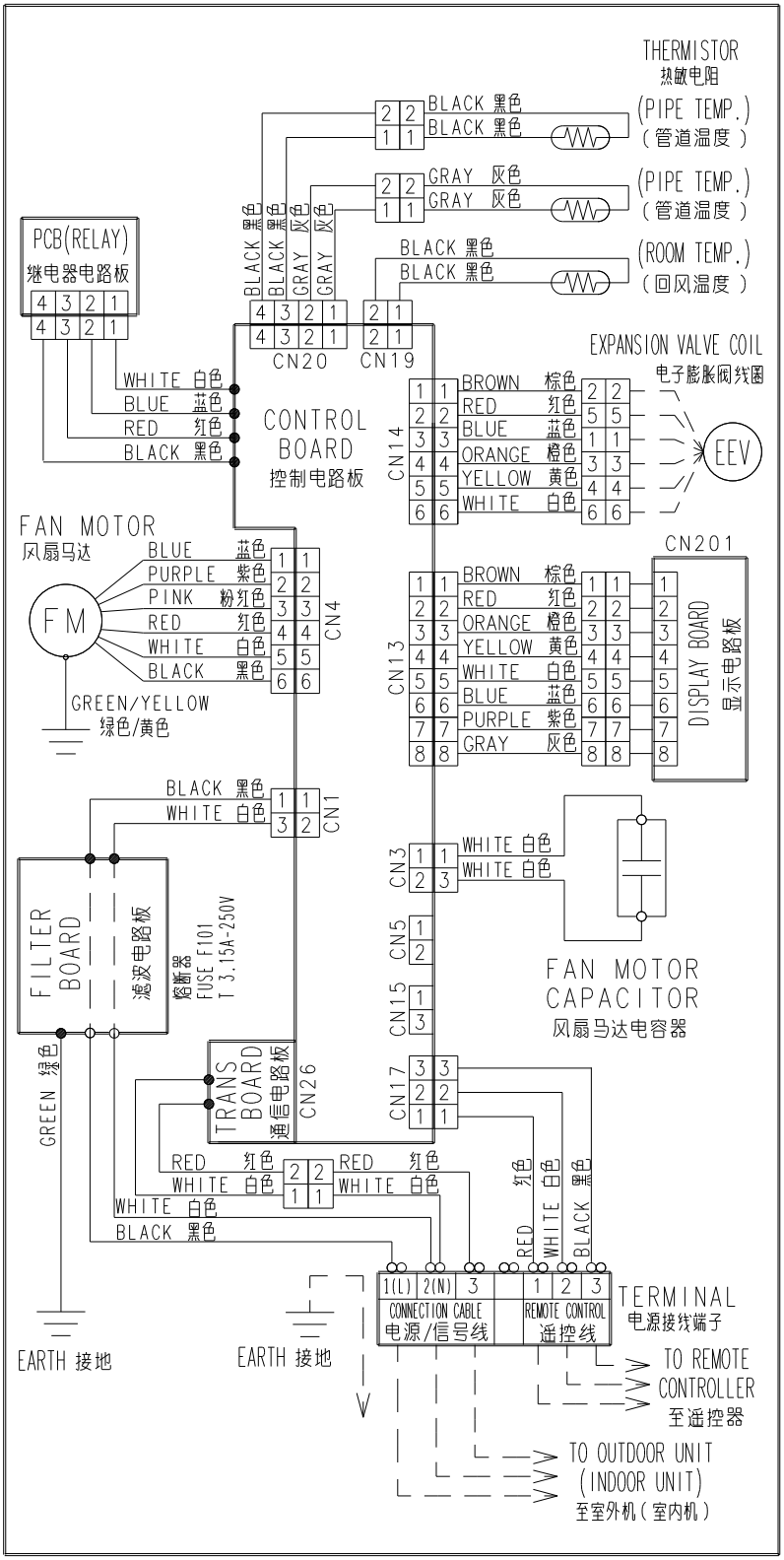

■ MODELS : AU7, AU9, AU12, AU14, AU18

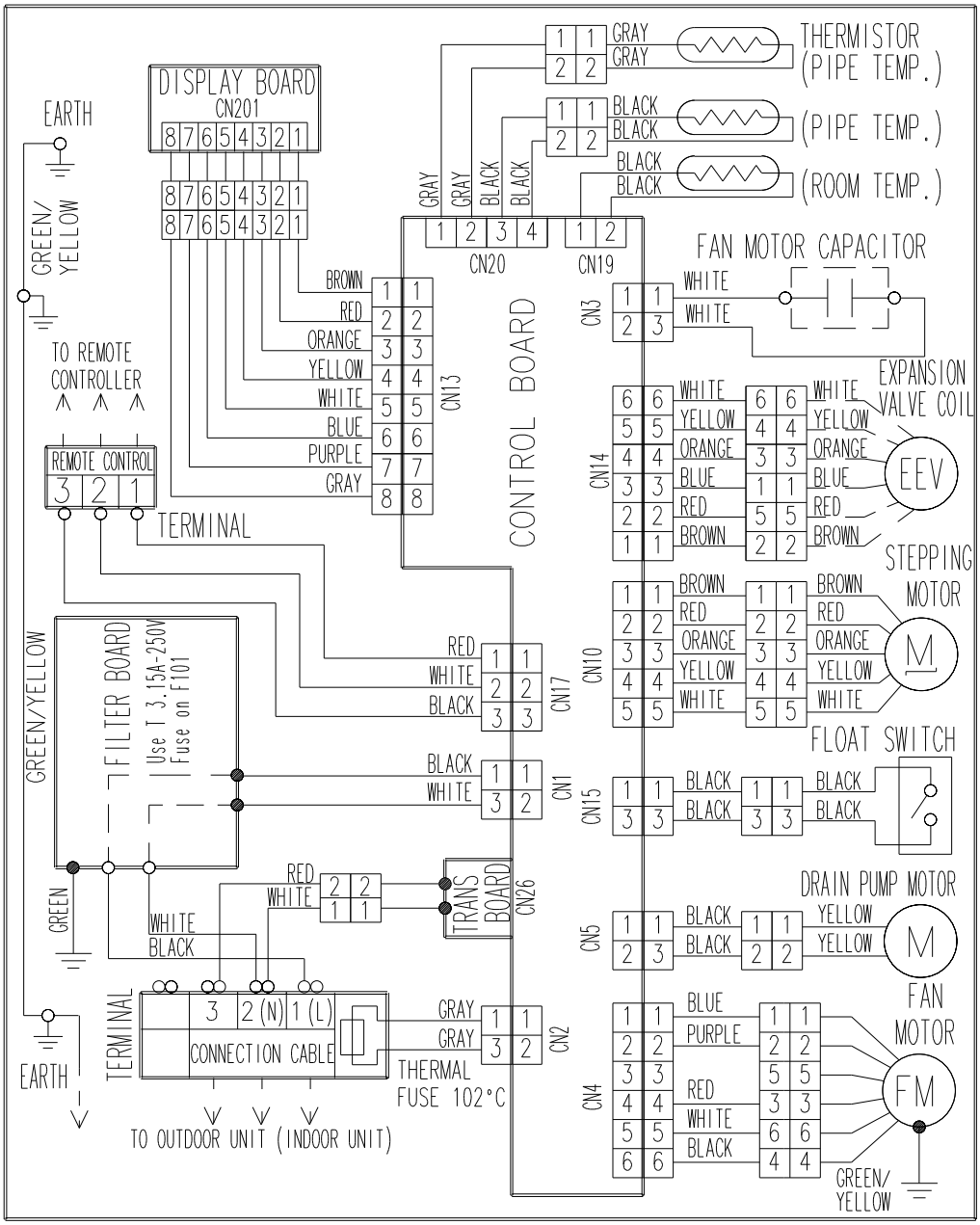

■MODELS : AU20, AU25, AU30

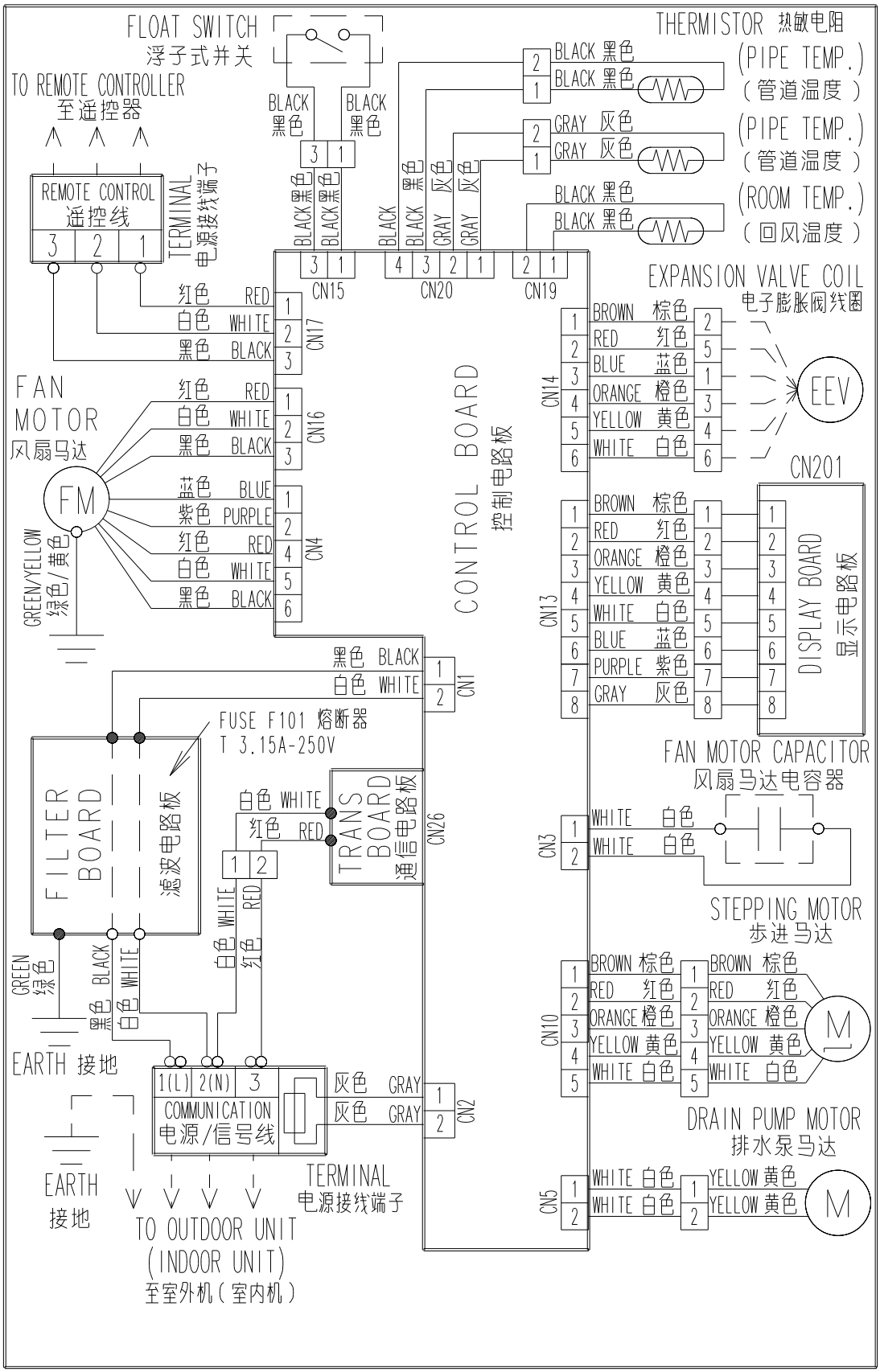

■MODELS : AU36, AU45, AU54

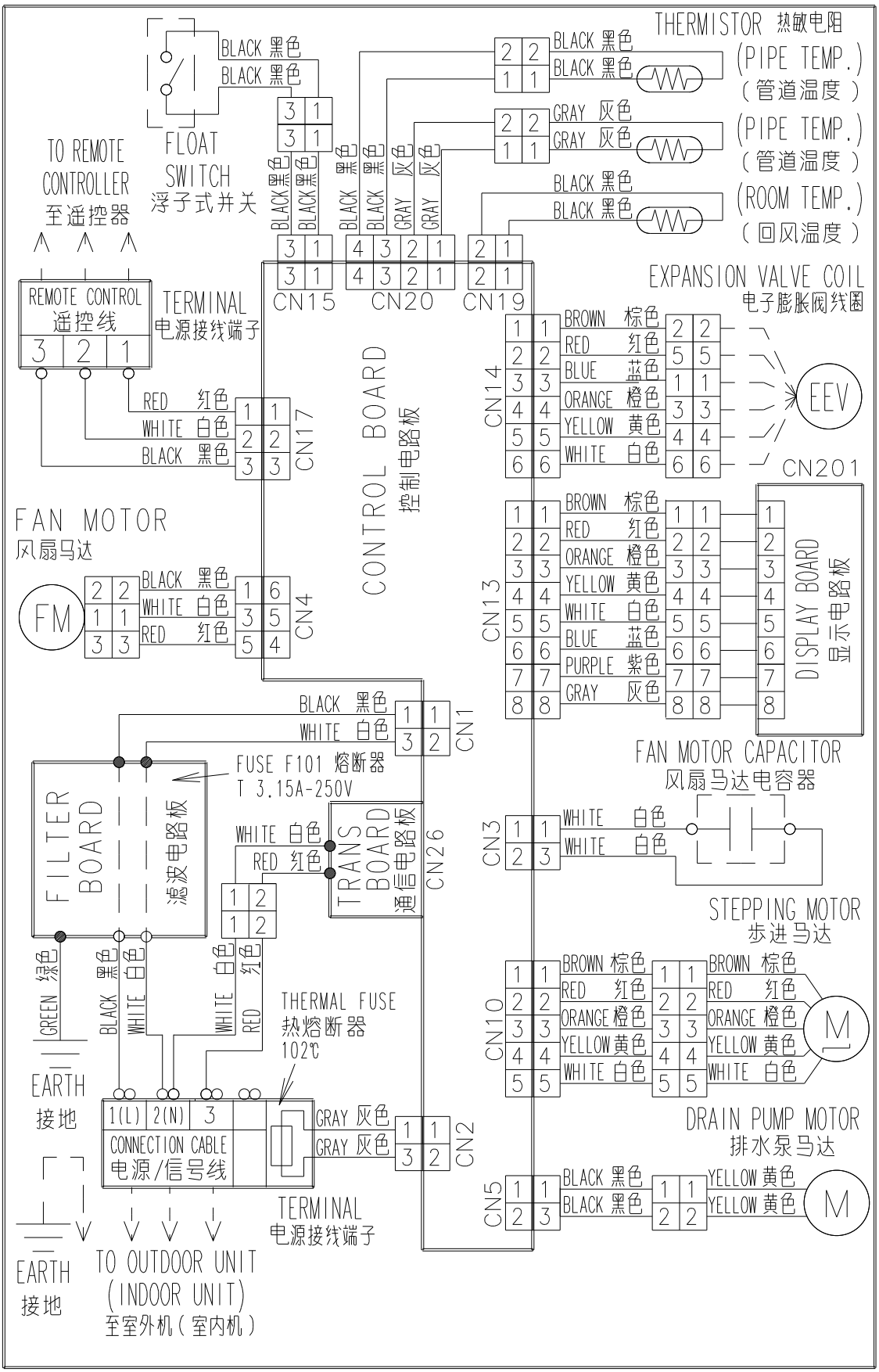

■ MODELS : AS7, AS9, AS12, AS14

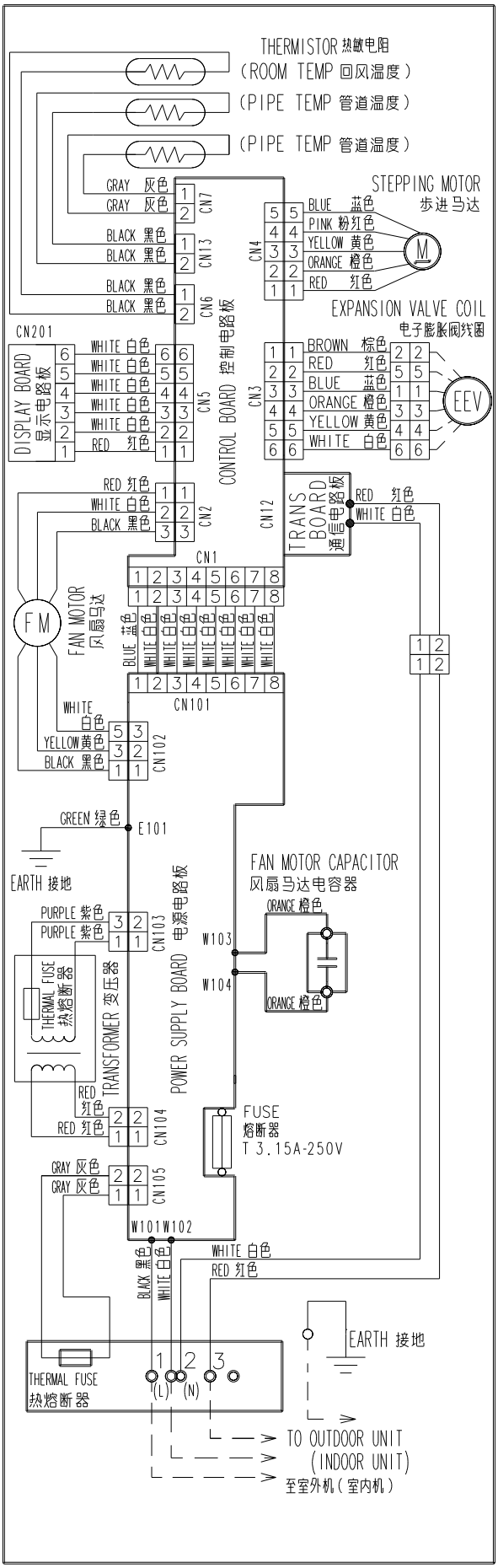

■ MODELS : AS18, AS24, AS30

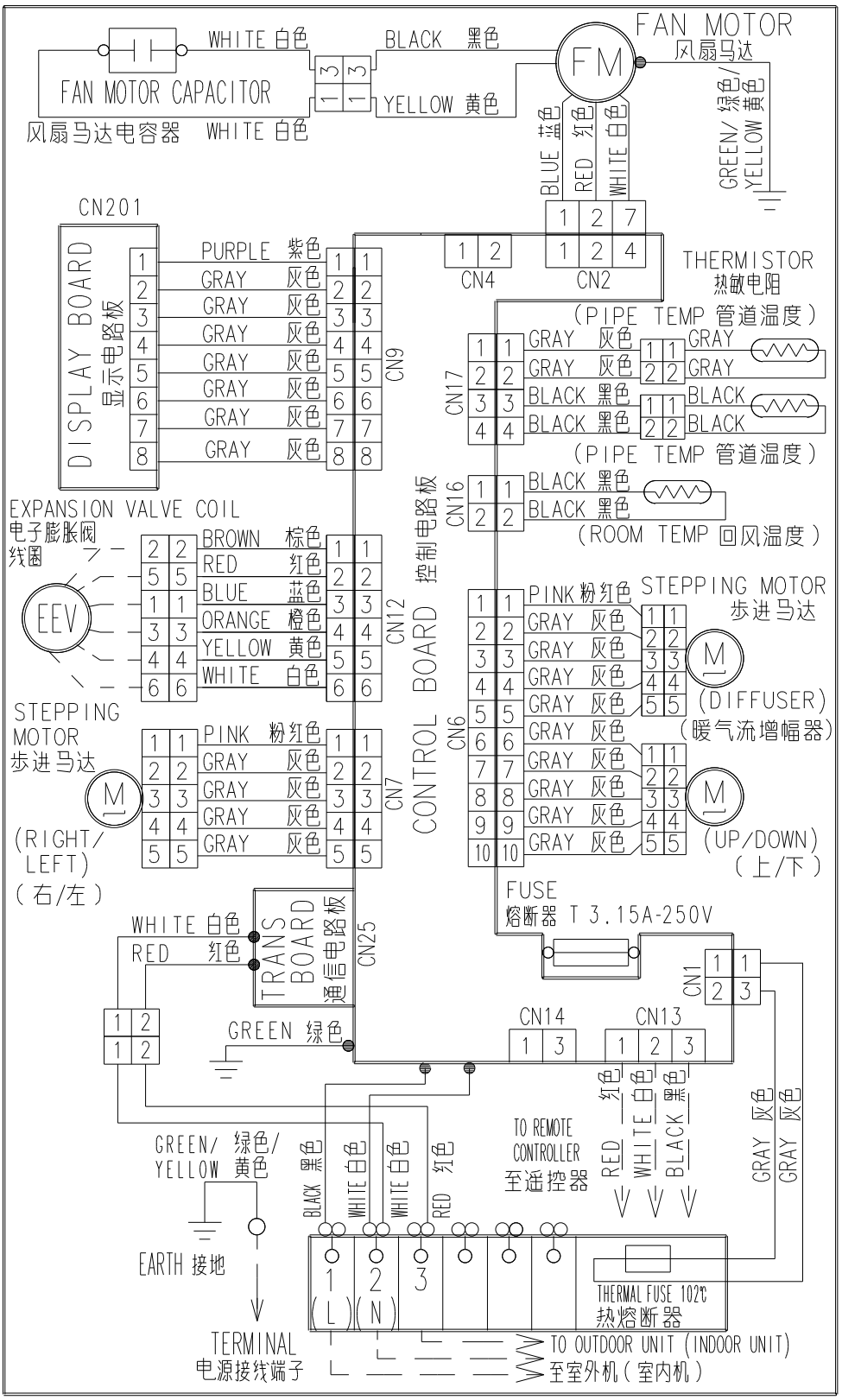

9-3-2 OUTDOOR UNIT

■HEAT PUMP TYPE

- **MODEL : AO54U**

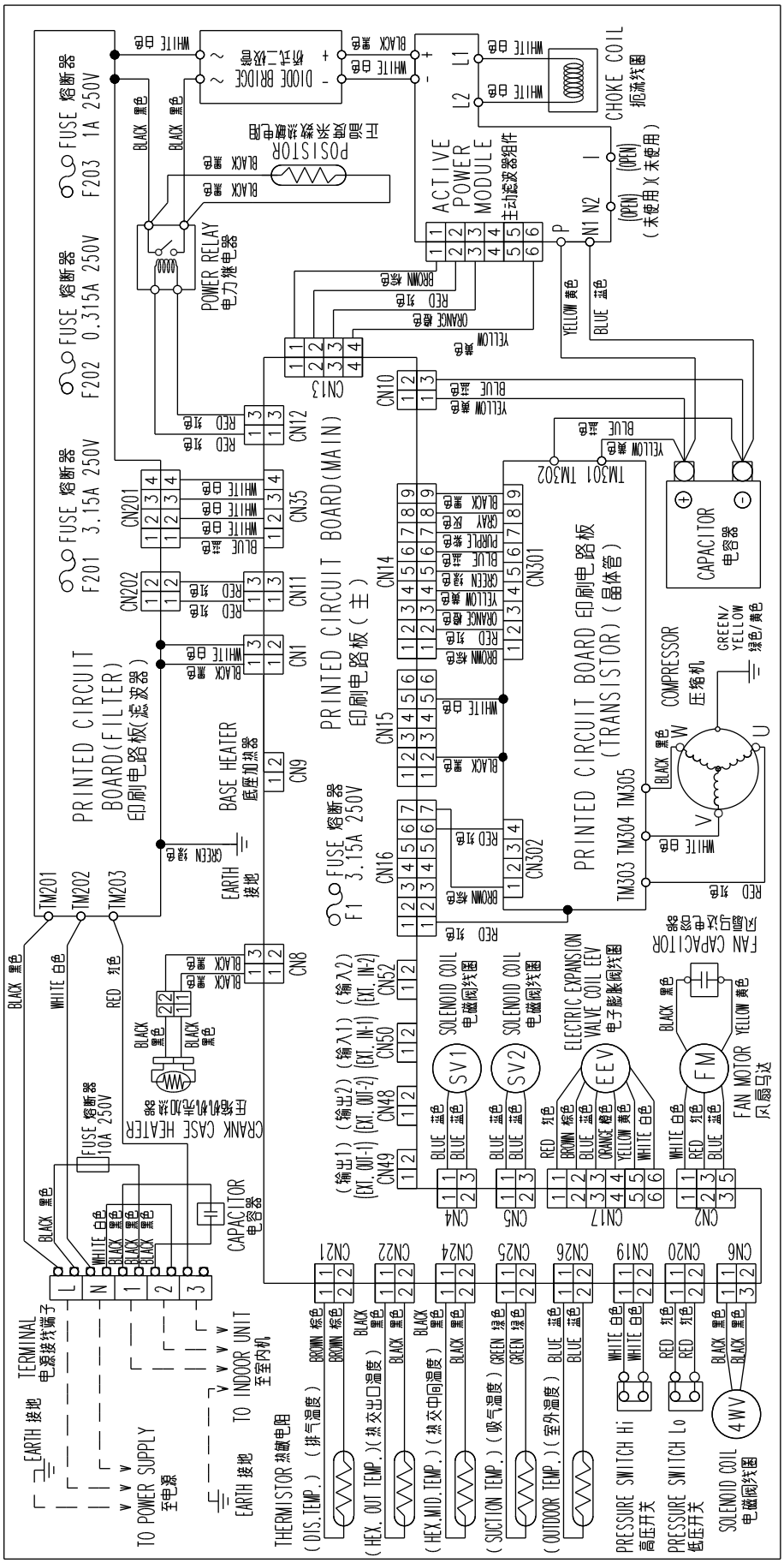

■COOLING ONLY TYPE

- **MODEL : AO54F**

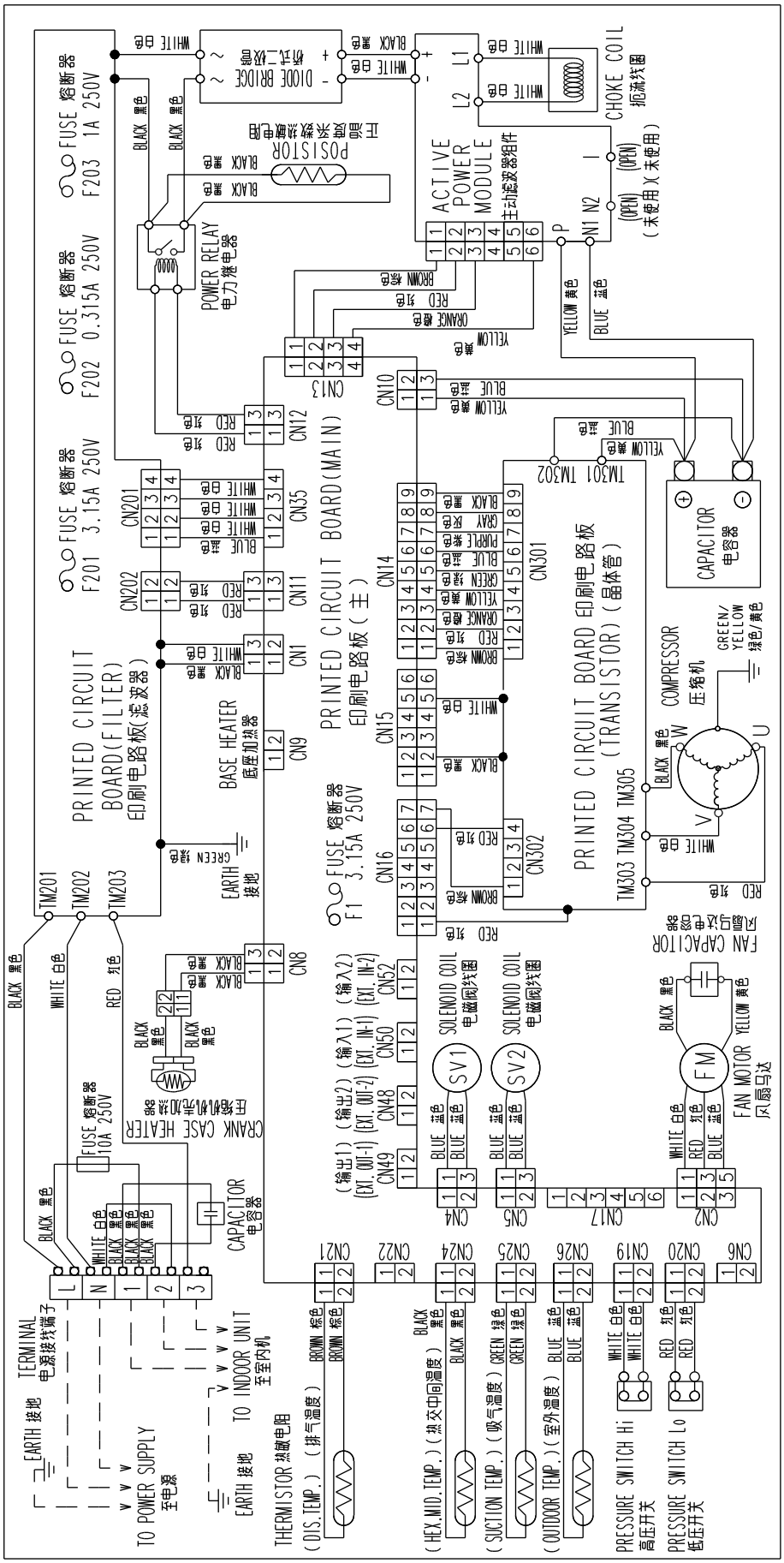

9-4 MODEL DESIGNATION

9-4-1 OUTDOOR UNIT

■ LINE UP

TYPE	CAPACITY	MODEL NAME	The number of connectable indoor unit
AIRSTAGE J Heat pump type	15.2 kW	AO∗54UJBMR	1 to 8
AIRSTAGE J Cooling only type	15.2 kW	AO∗54FJBMR	1 to 8

■ REFRIGERANT R410A

■ MODEL DESIGNATION

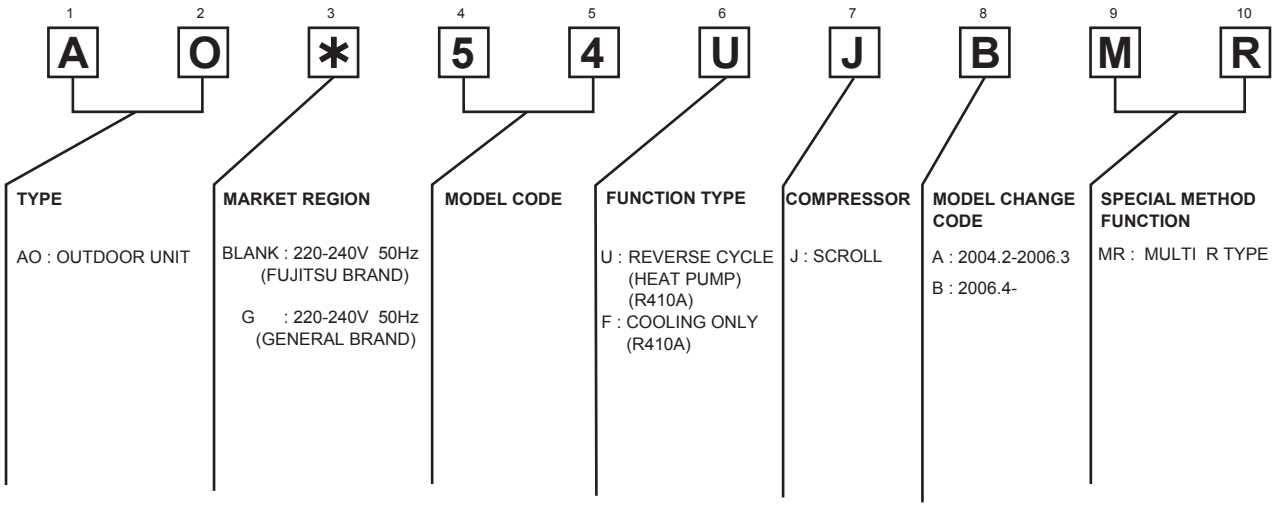

■ CAPACITY RANGE

MODEL	CAPACITY	Indoor unit connectable capacity
AO 54	15.2kW	7.60 to 22.8kW (50 to 150%)

9-4-2 INDOOR UNIT

■ LINE UP

8 types, 28models ranging from 2.15kW to 14.1kW.

Capacity (kW)	Model code	Cassette (compact)	Cassette	Duct (compact)	Duct	Wall mounted (compact)	Wall mounted
14.1	54		●				
12.7	45		●		●		
10.5	36		●		●		
8.80	30		●		●		●
7.05	25		●		●		
6.90	24						●
6.00	22			●			
5.70	20		●				
5.30	18	●		●			●
4.00	14	●		●		●	
3.60	12	●		●		●	
2.80	9	●		●		●	
2.15	7	●		●		●	

■ APPLICABLE OUTDOOR UNIT

Refrigerant type	Type	Model	MODEL CHANGE CODE
R410A	HEAT PUMP	AO54UJBMR	MODEL CHANGE CODE : B
	COOLING ONLY	AO54FJBMR	

■ MODEL DESIGNATION

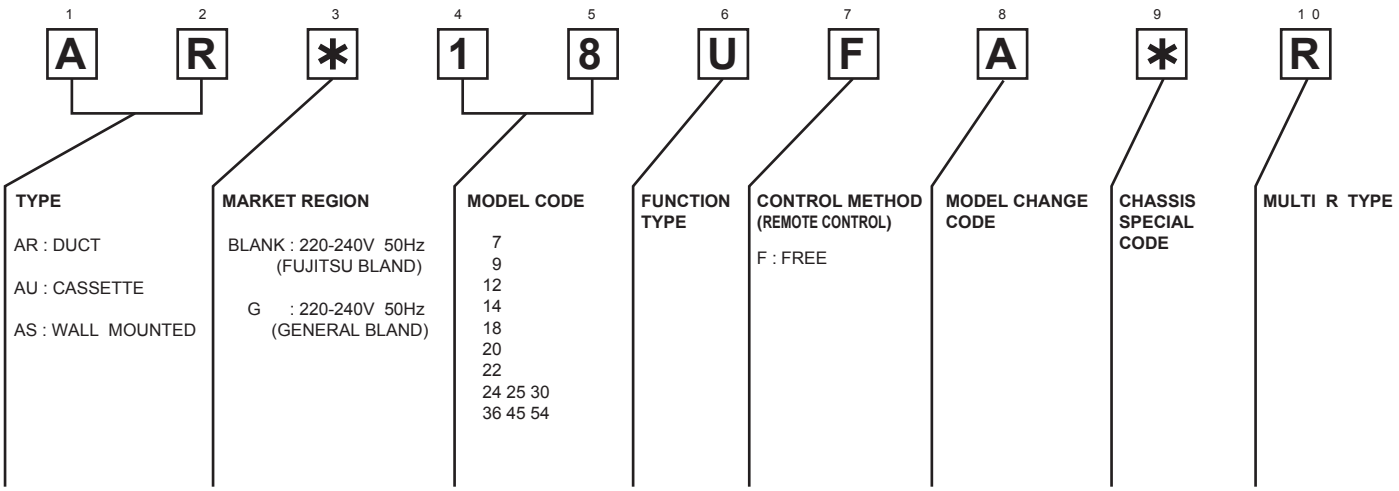

Refrigerant
R410A

AIRSTAGE™

J SERIES

10 . DISASSEMBLY ILLUSTRATION & PARTS LIST

10. DISASSEMBLY ILLUSTRATION & PARTS LIST

10-1 OUTDOOR UNIT

MODEL : AO*54UJBMR
AO*54FJBMR

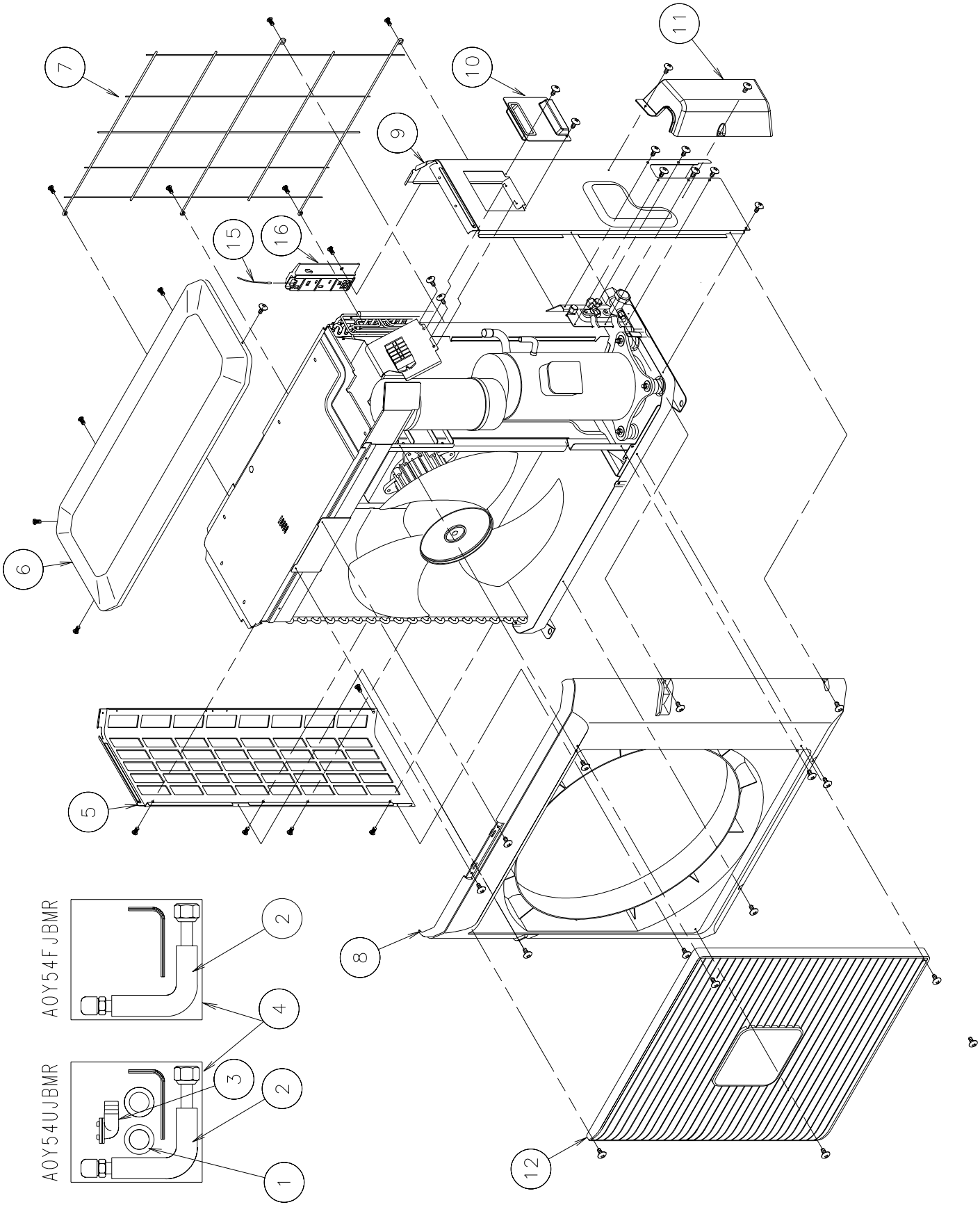

MODEL : AOY54UJBMR

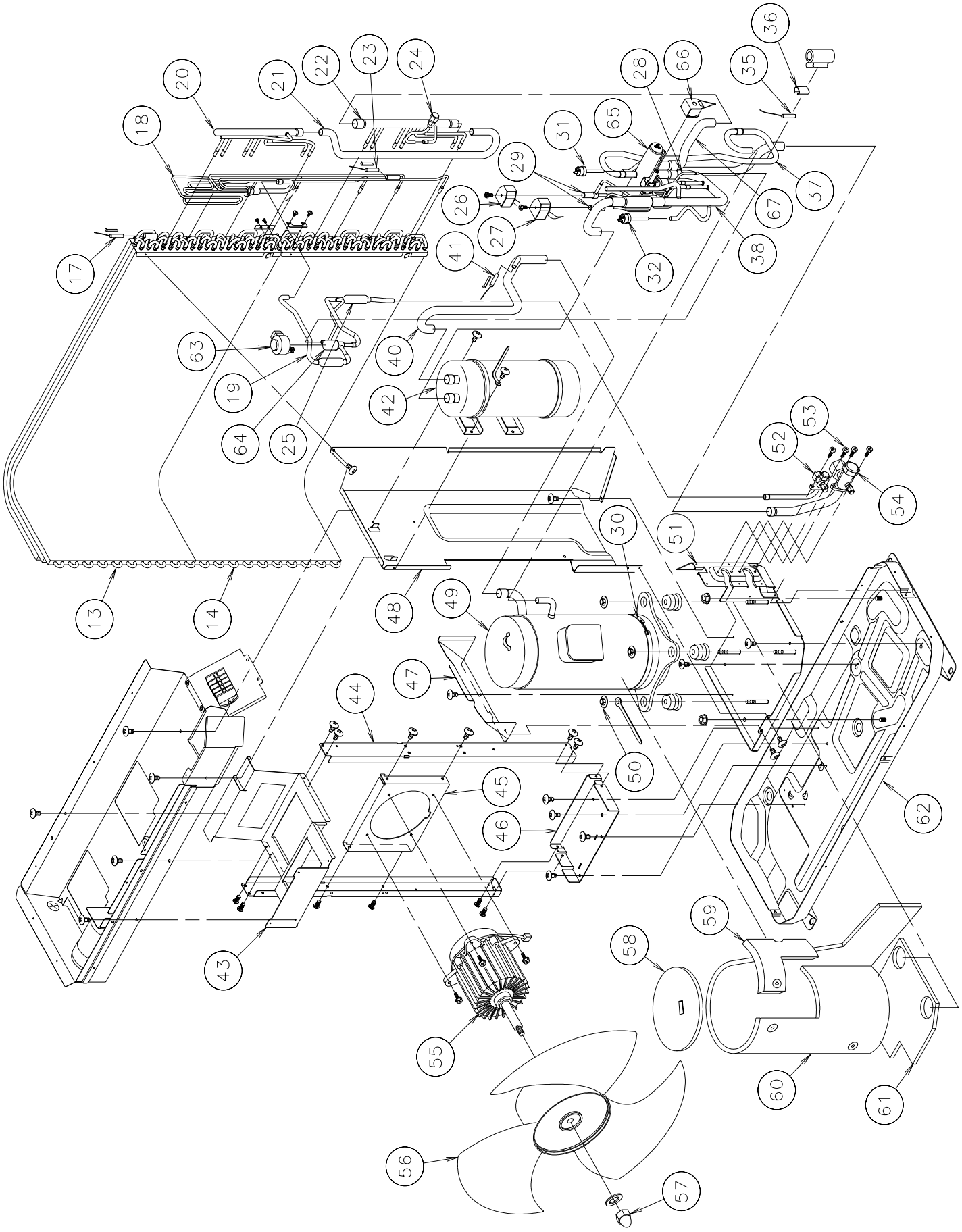

MODEL : AOY54FJBMR

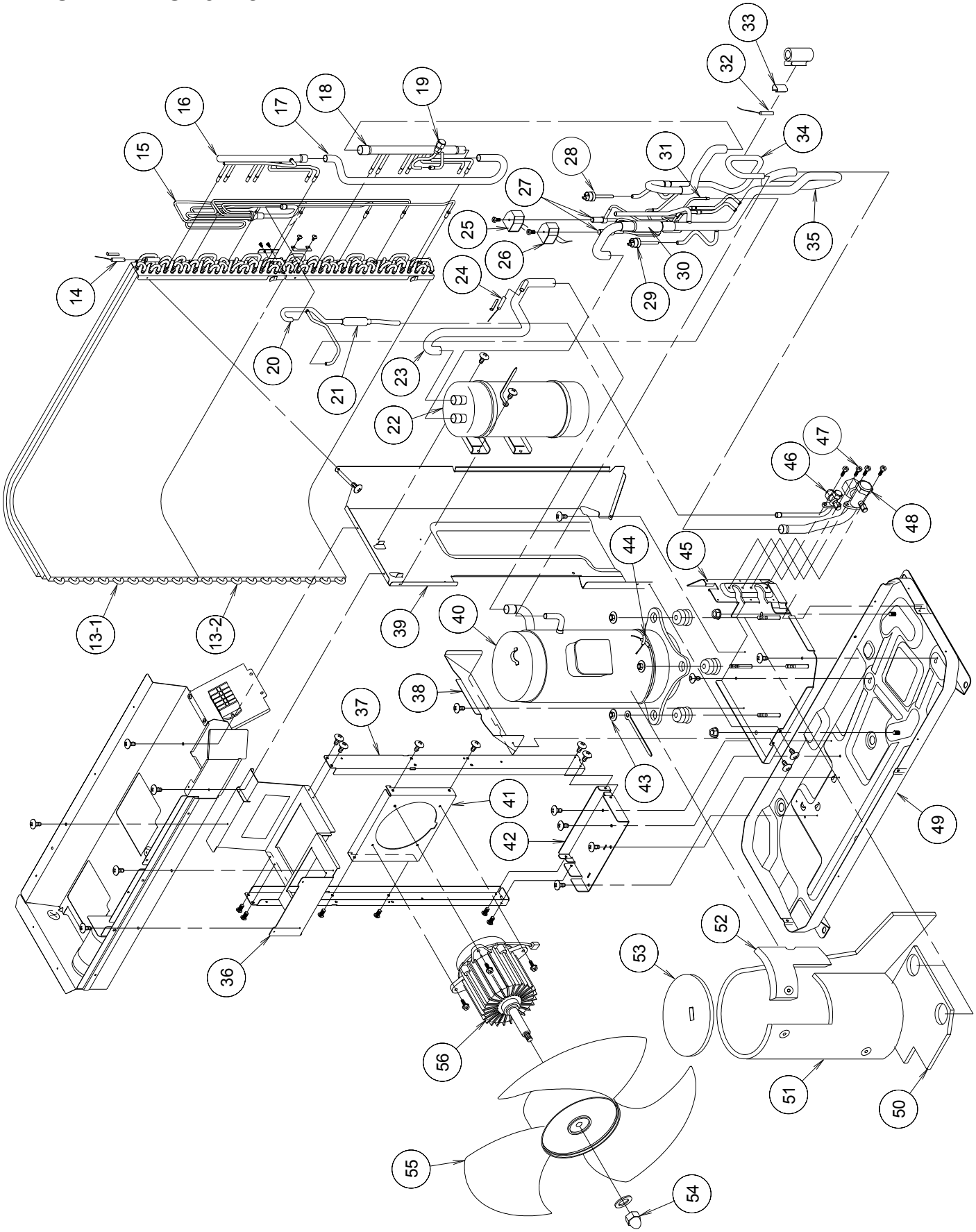

MODEL : AO*54UJBMR
AO*54FJBMR

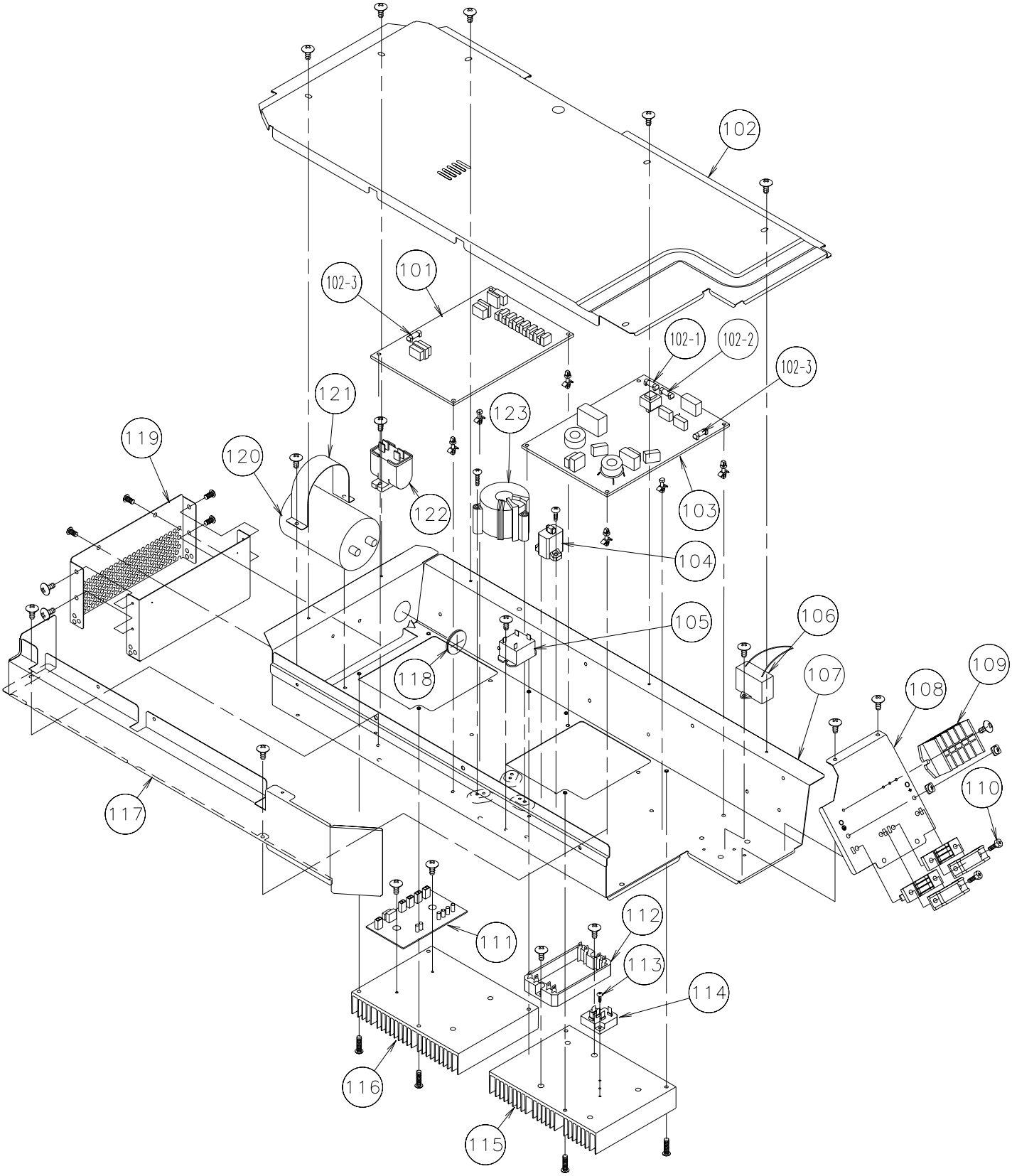

PARTS LIST

Ref No.	Description	Parts No. AO*54UJBMR	Q'ty	Ref No.	Description	Parts No. AO*54UJBMR	Q'ty
1	DRAIN CAP	313166024302		51	COMP PLATE	9372275016	
2	AUXILIARY PIPE ASSY	9374162017		52	3-WAY VALVE ASSY	9372205082	
3	DRAIN ASSY	9303029015		53	BOLT	0700145148	
4	ACCESSORY SUB ASSY	9372773024		54	3-WAY VALVE ASSY	9372205150	
5	CAB L SA	9372769027		55	MOTOR,INDUCT	9601705017	
6	CABINET TOP PLATE	9359799023		56	PROPELLER FAN	9361726000	
7	PRO NET(COND)	9372286029		57	NUT(CAP)	0700106026	
8	FRONT PANEL ASSY	9372768013		58	COMP COVER D	9372737019	
9	CAB R SA	9372770030		59	COMP COVER B	9372735015	
10	PANEL(TOP) SA	9373347019		60	COMP COVER C	9372736012	
11	VALVE COVER	9372796016		61	COMP COVER A	9372734018	
12	FAN GUARD SA	9373056027		62	BASE SA	9375259013	
13	COND A AS	9372267035		63	COIL (EXP VLV)	9900190026	
14	CONDENSER B ASSY	9372267028		64	EXPANSION VLV	9900170028	
15	THERMISTOR(OUT TEMP)	9900378035		65	4-WAY VALVE	9970035012	
16	THERMO HOLDER	9374177011		66	SOLENOID	9900191016	
17	HEAT EX THERMISTER	9900193010		67	JOINT PIPE B	9375277024	
18	DISTRIBUTOR ASSY	9375272012					
19	JOINT VALVE (EEV)	9375278045		101	CONTROLLER PCB	9705949027	
20	INLET PP(COND)A AS	9375273019		102-1	FUSE F202	0600365097	
21	INLET PP(COND)C	9373465058		102-2	FUSE F203	0600385163	
22	INLET PP(COND)B ASSY	9373463016		102-3	FUSE F201	0600376062	
23	HEAT TH	9900374037		102	CONT BOX MTL D SA	9375289010	
24	CHECK JOINT ASSY	9372802021		103	FILTER PCB	9705256026	
25	STRAINER AS	9372524015		104	PTC THERMISTOR	9704265012	
26	SOLENOID SV2	9900189181		105	RELAY	9900262013	
27	SOLENOID SV1	9900189174		106	CAPACITOR,PLASTIC	9705497016	
28	BYPASS VALVE ASSY	9375270018		107	CTR BOX MTL A	9372279014	
29	SOLENOID VLV	9900188023		108	CONT BOX MTL B SA	9375286026	
30	BELT HEATER	9361140264		109	TERMINAL 5P	9363275018	
31	PRESSURE SWITCH	9900186012		110	BOLT	0700145179	
32	PRESSURE SWITCH	9900187019		111	TR ASSY	9705253032	
35	DISCHAREG THERMISTER	9704219107		112	ACTPM	9707278019	
36	THERMISTOR SPRING	9372140017		113	SCREW WITH WASHER	0700095054	
37	DISCHARGE PIPE A ASSY	9375271015		114	D,PWR(BRIDGE)	0100122039	
38	JOINT PIPE A	9375269012		115	HEAT SINK A	9372282014	
40	SUC PIPE AS	9375357016		116	HEAT SINK B	9372283011	
41	SUCTION TEMP THERMO	9900192013		117	PROTECTOR	9372284025	
42	ACCUMULATOR AS	9372701027		118	CAP (POWER)	9352173011	
43	MTR BRKT A	9372270011		119	CONT BOX MTL C SA	9373320029	
44	MTR BRKT B	9372271018		120	CAPACITOR,ELEC	9704268020	
45	MTR BRKT C	9372272015		121	BAND	9372281017	
46	MTR BRKT D	9372273012		122	CAPACITOR(FAN MOTOR)	9704305053	
47	SEPA WALL C SUB ASSY	9373483014		123	COIL,CHOKE	9703458019	
48	SEPA WALL SA	9372767023					
49	COMPRESSOR ASSY	9372716014					
50	SPECIAL NUT M8	9355091008					

PARTS LIST

Ref No.	Description	Parts No. AO*54FJBMR	Q'ty	Ref No.	Description	Parts No. AO*54FJBMR	Q'ty
2	AUXILIARY PIPE ASSY	9374162017		51	COMP COVER C	9372736012	
4	ACCESSORY SUB ASSY	9373583011		52	COMP COVER B	9372735015	
5	CAB L SA	9372769027		53	COMP COVER D	9372737019	
6	CABINET TOP PLATE	9359799023		54	NUT (CAP)	0700106026	
7	PRO NET(COND)	9372286029		55	PROPELLER FAN	9361726000	
8	FRONT PANEL ASSY	9372768013		56	MOTOR,INDUCT	9601705017	
9	CAB R SA	9372770030		57	DISTRIBUTOR ASSY	9375272012	
10	PANEL(TOP) SA	9373347019		58	INLET PP(COND)A AS	9375273019	
11	VALVE COVER	9372796016					
12	FAN GUARD SA	9373056027		101	CONTROLLER PCB	9705949027	
13-1	COND A AS	9372267035		102-1	FUSE F202	0600365097	
13-2	CONDENSER B ASSY	9372267028		102-2	FUSE F203	0600385163	
14	HEAT TH	9900193010		102-3	FUSE F201	0600376062	
15	THERMISTOR(OUT TEMP)	9900378035		102	CONT BOX MTL D SA	9375289010	
16	THERMO HOLDER	9374177011		103	FILTER PCB	9705256026	
17	INLET PP(COND)C	9373465058		104	PTC THERMISTOR	9704265012	
18	INLET PP(COND)B AS	9373463016		105	RELAY	9900262013	
19	CHECK JOINT ASSY	9372802021		106	CAPACITOR,PLASTIC	9705497016	
20	CONDENSING PIPE ASSY	9375268022		107	CTR BOX MTL A	9372279014	
21	STRAINER ASSY	9372524015		108	CONT BOX MTL B SA	9375286026	
22	ACCUMULATOR ASSY	9372701027		109	TERMINAL 5P	9363275018	
23	SUCTION PIPE ASSY	9375357016		110	BOLT	0700145179	
24	SUCTION TH	9900192013		111	TR ASSY	9705253032	
25	SOLENOID SV2	9900189181		112	ACTPM	9707278019	
26	SOLENOID SV1	9900189174		113	SCREW WITH WASHER	0700095054	
27	SOLENOID VALVE	9900188023		114	D,PWR(BRIDGE)	0100122039	
28	PRESSURE SWITCH (HP)	9900186012		115	HEAT SINK A	9372282014	
29	PRESSURE SWITCH (LP)	9900187019		116	HEAT SINK B	9372283011	
30	STRAINER ASSY	9372519011		117	PROTECTOR	9372284025	
31	BYPASS VALVE ASSY	9375270018		118	CAP (POWER)	9352173011	
32	DISCHAREG TH	9704219107		119	CONT BOX MTL C SA	9373320029	
33	THERMISTOR SPRING	9372140017		120	CAPACITOR,ELEC	9704268020	
34	DISCHARGE PIPE A ASSY	9375271022		121	BAND	9372281017	
35	SUCTION PIPE B ASSY	9375269029		122	CAPACITOR(FAN MOTOR)	9704305053	
36	MOTOR BRACKET A	9372270011		123	COIL,CHOKE	9703458019	
37	MOTOR BRACKET B	9372271018					
38	SEPA WALL C SA	9373483014					
39	SEPALATE WALL SUB ASSY	9372767023					
40	COMPRESSOR ASSY	9372716014					
41	MOTOR BRACKET C	9372272015					
42	MOTOR BRACKET D	9372273012					
43	SPECIAL NUT M8	9355091008					
44	BELT HEATER	9361140264					
45	COMP PLATE ASSY	9372274019					
46	3-WAY VALVE ASSY (9.52)	9372205082					
47	BOLT	0700145148					
48	3-WAY VALVE ASSY (19.05)	9372205150					
49	BASE SUB ASSY	9375259013					
50	COMP COVER A	9372734018					

10-2 INDOOR UNIT

Models : AU 7UFAAR
AU 9UFAAR
AU 12UFAAR
AU 14UFAAR
AU 18UFAAR

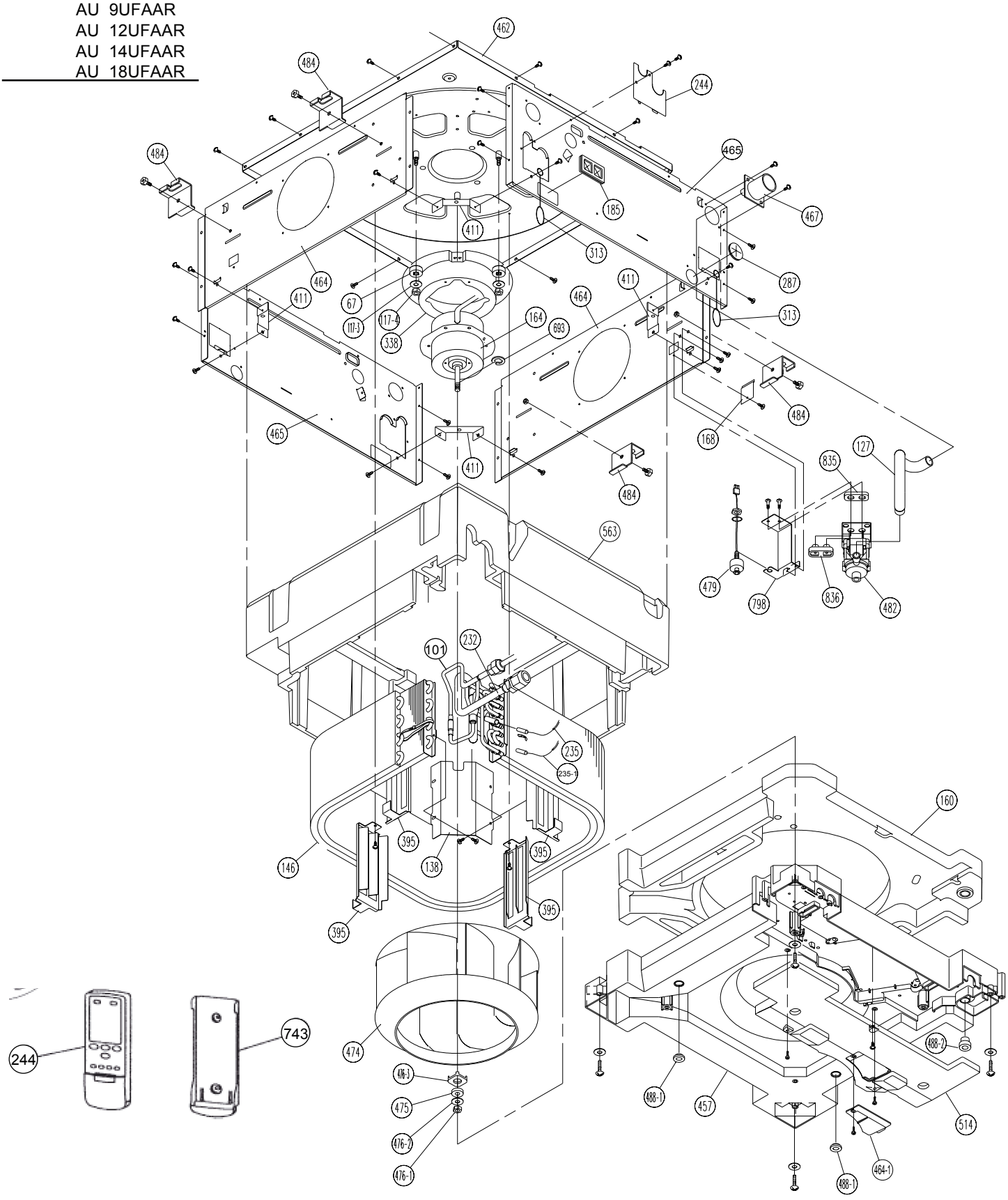

Models : AU 7UFAAR
AU 9UFAAR
AU 12UFAAR
AU 14UFAAR
AU 18UFAAR

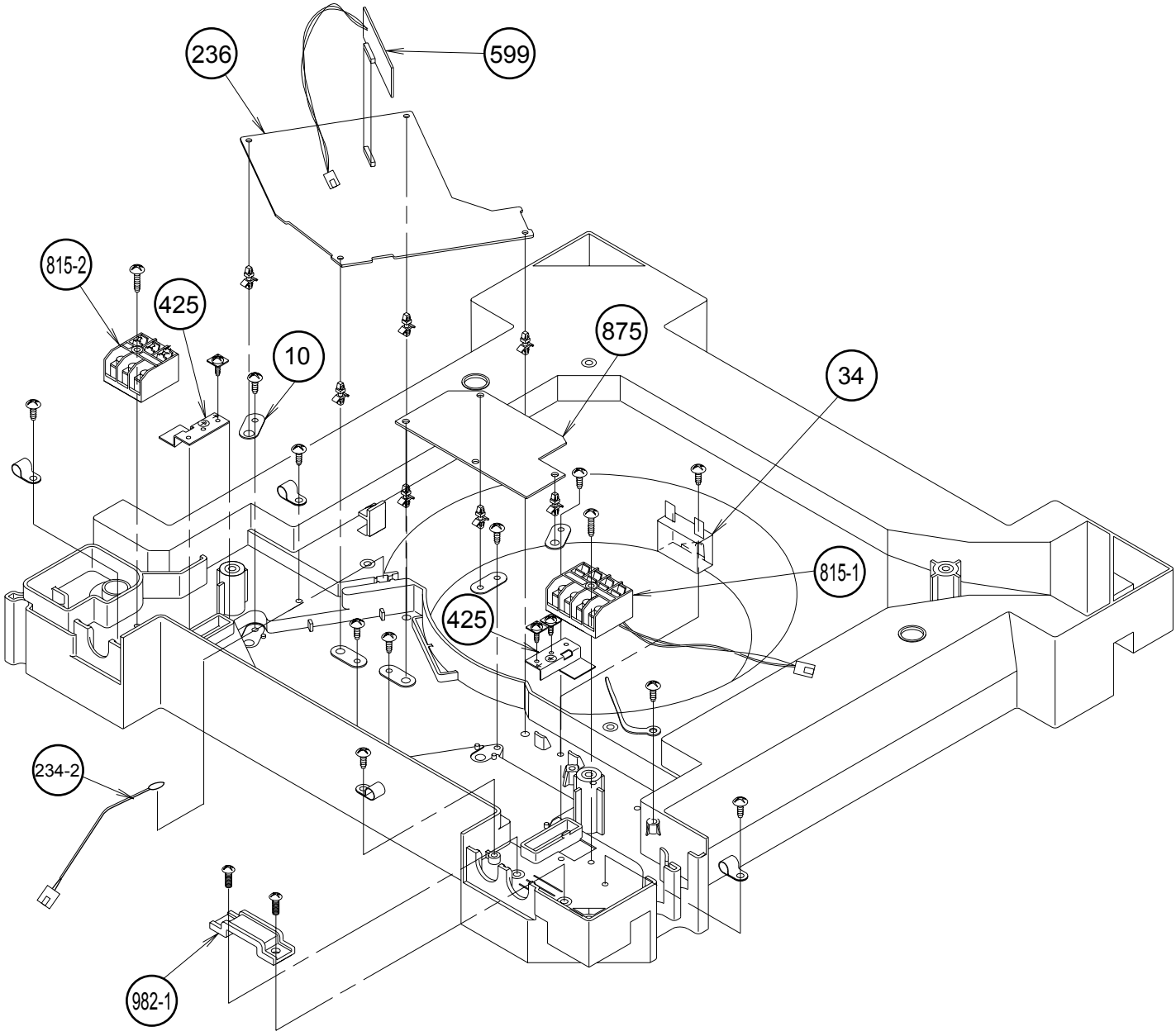

Models : UYG-UDYD-W

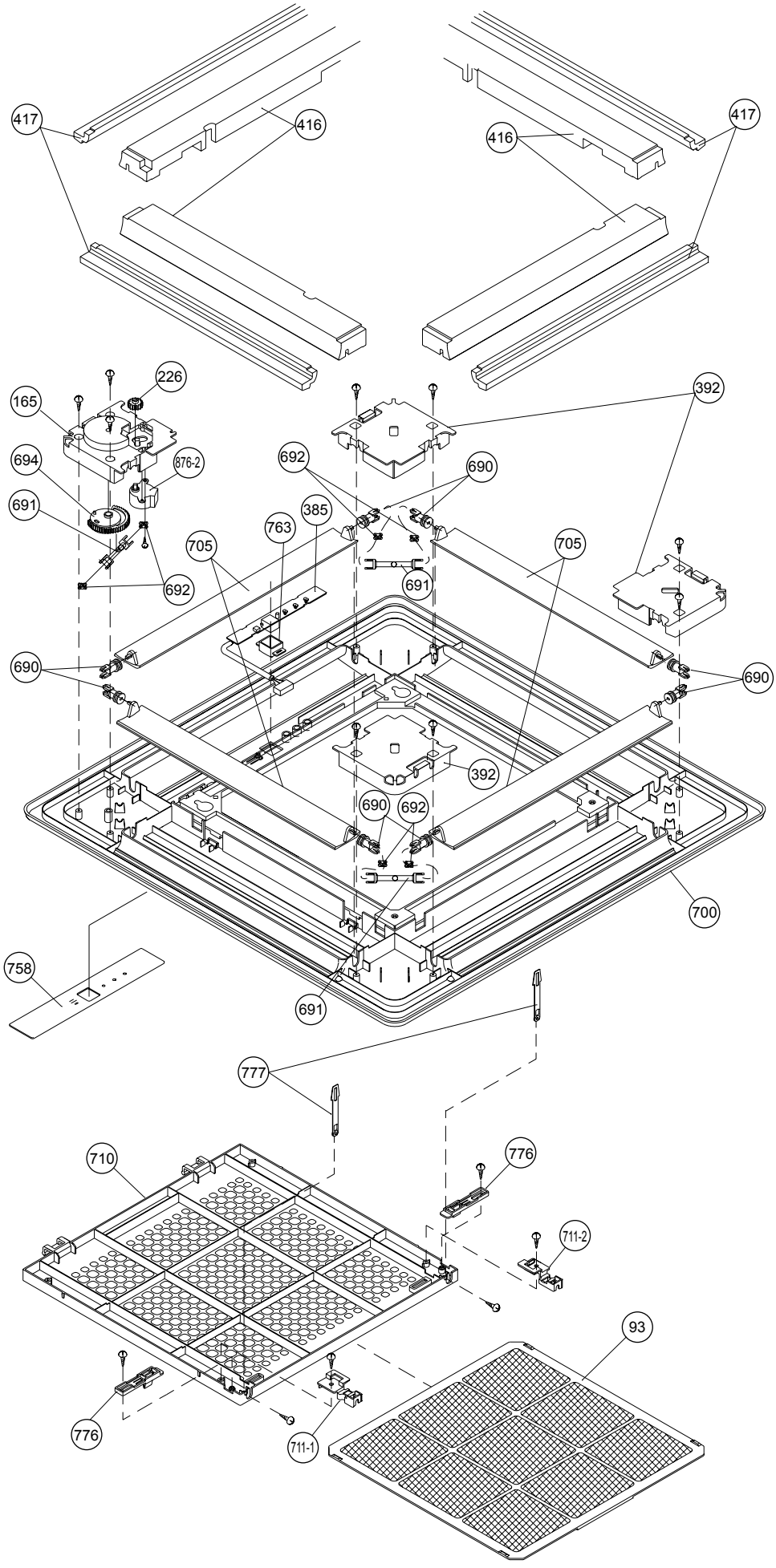

Models : AU 7UFAAR
AU 9UFAAR

P A R T S L I S T

When you order parts, please make a photocopy of this page and fill the number of the parts in the "Order" column.

INDOOR UNIT

Ref No.	Description	Parts No. AU 7UFAAR / AU 9UFAAR	Ord Q'ty	Ref No.	Description	Parts No. AU 7UFAAR / AU 9UFAAR	Ord Q'ty
10	RFM (PWB)	9370451009		467	DRAIN PORT	313005415658	
34	CAPACITOR	9704305084		474	TURBO FAN	9370074000	
67	RUBBER	9361279001		475	TURBO FAN RUBBER	9366013006	
101	INLET PIPE (EVA) ASSY	9372834015		476-1	SPECIAL NUT M8	313005360755	
117-3	SPECIAL WASHER M6	313306391007		476-2	SPECIAL WASHER	301801185049	
117-4	HEX NUT S/W	301721160116		476-3	SPECIAL WASHER	9359954002	
127	DRAIN HOSE	9370452006		479	FLOAT SWITCH	313005416154	
138	SEPARATE WALL A	9370071009		482	PUMP ASSY	9359974000	
146	EVAPORATOR ASSY	9371116006		484	HANGER METAL	9359644002	
160	DRAIN PAN	9370081008		488-1	DRAIN PAN PLUG	9359653004	
164	FAN MOTOR (INDUCTION)	9601040040		488-2	DRAIN PAN PLUG	313005174654	
168	CABINET-E	9362735001		514	CONTROL BOX COVER	9370084009	
185	RUBBER BUSHING	9357376004		563	INSULATION (INSIDE BOX)	9370072006	
232	EXIT PIPE (EVA) ASSY	9370117073		599	SIGNAL PCB ASSY	9705956018	
234-2	THERMISTOR (ROOM)	9703299186		693	WASHER E	9359989011	
235	THERMISTOR (PIPE)	9703297021		743	REMOTE CONTROL HOLDER	9702066042	
235-1	THERMISTOR (PIPE)	9900220020		798	DRAIN PUMP HOLDER	9370079005	
236	CONTROLLER PCB ASSY	9705491038		815-1	TERMINAL	9306488062	
244	PIPE COVER	9359646006		815-2	TERMINAL 3P	9703345012	
287	CAP (POWER)	9352173011		835	CUSHION-A, FOR PUMP	9352211003	
313	HOOKING WIRE	9357224008		836	CUSHION-B, FOR PUMP	9356084016	
338	MOTOR FIXTURE	9359656005		875	FILTER PCB ASSY	9704799098	
395	EVA HOLDER	9370077001		982-1	CORD CLAMP A	9359820017	
411	HOLDER-A	9359655008			FUSE (BET 3.15A-250V)	0600222512	
425	EARTH PLATE	9357957005			VARISTOR(ARRESTER)	0600168032	
457	RFM (DRAIN PAN)	9370080001			TRANS,SW (ETS28AU1W8AC)	9704658012	
462	TOP COVER PLATE	9359642015					
464	CABINET-A ASSY	9359643005					
464-1	COVER	9370085006					
465	CABINET-B	9359645009					

Models : AU 12UFAAR
AU 14UFAAR
AU 18UFAAR

P A R T S L I S T

When you order parts, please make a photocopy of this page and fill the number of the parts in the "Order" column.

INDOOR UNIT

Ref No.	Description	Parts No. AU 12UFAAR / AU 14UFAAR	Parts No. AU 18UFAAR	Ord Q'ty	Ref No.	Description	Parts No. AU 12UFAAR / AU 14UFAAR	Parts No. AU 18UFAAR	Ord Q'ty
10	RFM (PWB)	9370451009	9370451009		467	DRAIN PORT	313005415658	313005415658	
34	CAPACITOR	9704305084	9704305084		474	TURBO FAN	9370074000	9370074000	
67	RUBBER	9361279001	9361279001		475	TURBO FAN RUBBER	9366013006	9366013006	
101	INLET PIPE (EVA) ASSY	9372834015	9372834015		476-1	SPECIAL NUT M8	313005360755	313005360755	
117-3	SPECIAL WASHER M6	313306391007	313306391007		476-2	SPECIAL WASHER	301801185049	301801185049	
117-4	HEX NUT S/W	301721160116	301721160116		476-3	SPECIAL WASHER	9359954002	9359954002	
127	DRAIN HOSE	9370452006	9370452006		479	FLOAT SWITCH	313005416154	313005416154	
138	SEPARATE WALL A	9370071009	9370071009		482	PUMP ASSY	9359974000	9359974000	
146	EVAPORATOR ASSY	9371116006	9371116006		484	HANGER METAL	9359644002	9359644002	
160	DRAIN PAN	9370081008	9370081008		488-1	DRAIN PAN PLUG	9359653004	9359653004	
164	FAN MOTOR (INDUCTION)	9601040019	9601040026		488-2	DRAIN PAN PLUG	313005174654	313005174654	
168	CABINET-E	9362735001	9362735001		514	CONTROL BOX COVER	9370084009	9370084009	
185	RUBBER BUSHING	9357376004	9357376004		563	INSULATION (INSIDE BOX)	9370072006	9370072006	
232	EXIT PIPE (EVA) ASSY	9370117080	9370117097		599	SIGNAL PCB ASSY	9705956018	9705956018	
234-2	THERMISTOR (ROOM)	9703299186	9703299186		693	WASHER E	9359989011	9359989011	
235	THERMISTOR (PIPE)	9703297021	9703297021		743	REMOTE CONTROL HOLDER	9702066042	9702066042	
235-1	THERMISTOR (PIPE)	9900220020	9900220020		798	DRAIN PUMP HOLDER	9370079005	9370079005	
236	CONTROLLER PCB ASSY	9705491038	9705491038		815-1	TERMINAL	9306488062	9306488062	
244	PIPE COVER	9359646006	9359646006		815-2	TERMINAL 3P	9703345012	9703345012	
287	CAP (POWER)	9352173011	9352173011		835	CUSHION-A, FOR PUMP	9352211003	9352211003	
313	HOOKING WIRE	9357224008	9357224008		836	CUSHION-B, FOR PUMP	9356084016	9356084016	
338	MOTOR FIXTURE	9359656005	9359656005		875	FILTER PCB ASSY	9704799098	9704799098	
395	EVA HOLDER	9370077001	9370077001		982-1	CORD CLAMP A	9359820017	9359820017	
411	HOLDER-A	9359655008	9359655008			FUSE (BET 3.15A-250V)	0600222512	0600222512	
425	EARTH PLATE	9357957005	9357957005			VARISTOR(ARRESTER)	0600168032	0600168032	
457	RFM (DRAIN PAN)	9370080001	9370080001			TRANS,SW (ETS28AU1W8AC)	9704658012	9704658012	
462	TOP COVER PLATE	9359642015	9359642015						
464	CABINET-A ASSY	9359643005	9359643005						
464-1	COVER	9370085006	9370085006						
465	CABINET-B	9359645009	9359645009						

Models : UTG-UDYD-W

GRILL FOR CEILING RECESSED TYPE ROOM AIR CON

Ref No.	Description	Parts No. UTG-UDYD-W	Ord Q'ty	Ref No.	Description	Parts No. UTG-UDYD-W	Ord Q'ty
93	FILTER	9359632009		700	PANEL	9359619017	
165	MOTOR COVER	9359623014		705	LOUVER	9359624011	
226	MOTOR GEAR	9359629009		710	INTAKE GRILLE	9370126006	
385	INDICATOR PCB ASSY	9702224011		711-1	FILTER HOLDER-A	9359634003	
392	COVER-A (FOR JOINT)	9359622017		711-2	FILTER HOLDER-B	9359635000	
416	INSULATION (PANEL)-A	9359620006		758	DECORATION PLATE-A	9360039019	
417	INSULATION (PANEL)-B	9359621003		763	RECEIVER COVER	9359630005	
690	JOINT-A	9359626008		776	GRILLE STOPPER	9359633013	
691	JOINT-B	9359627005		777	GRILLE HOOK	9359761006	
692	JOINT SHAFT	9359625001		876-2	STEP MOTOR	9360307019	
694	CAM GEAR	9359628002					

Model : AU 20UFARR
AU 25UFARR
AU 30UFARR

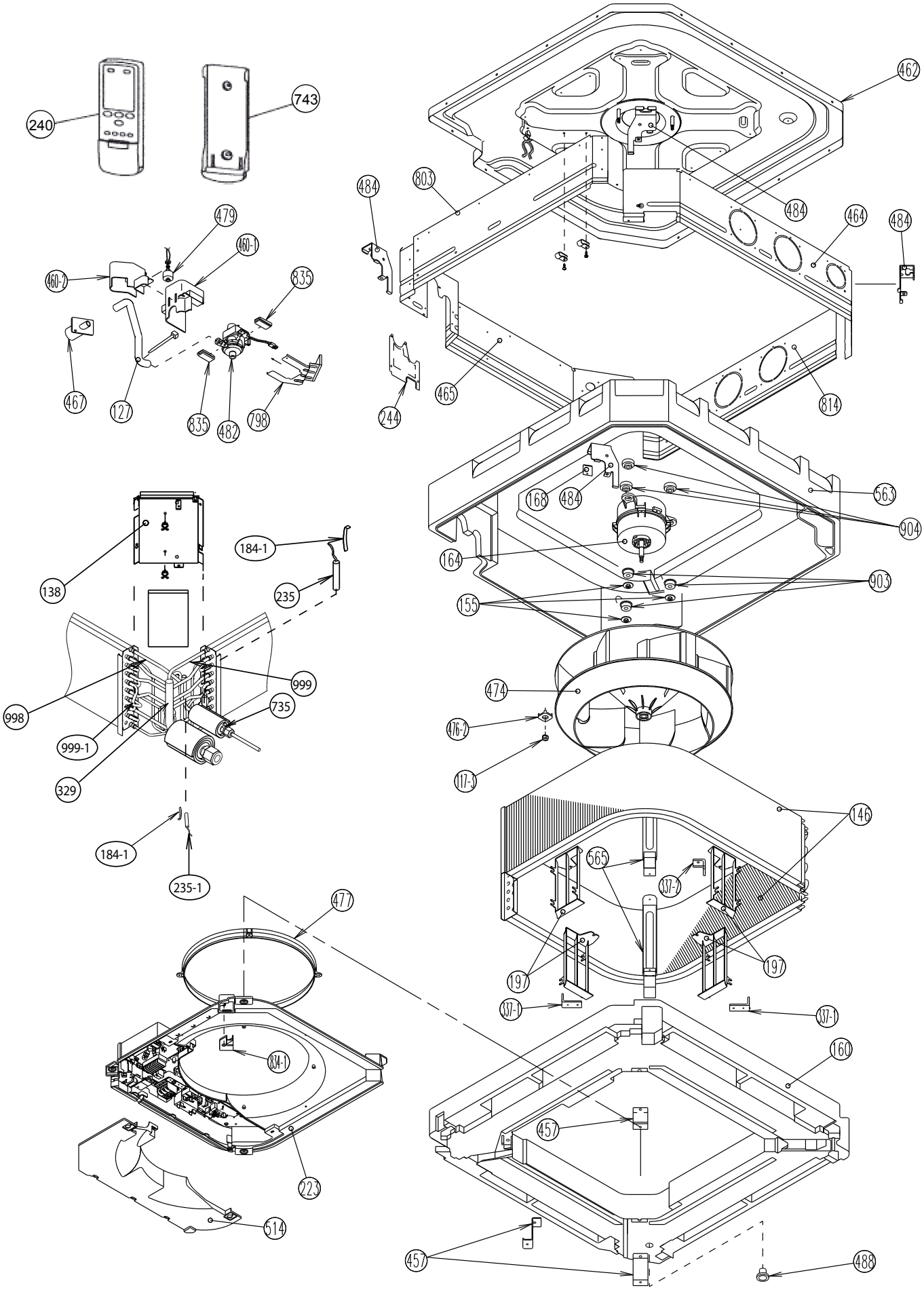

Model : AU 20UFARR
AU 25UFARR
AU 30UFARR

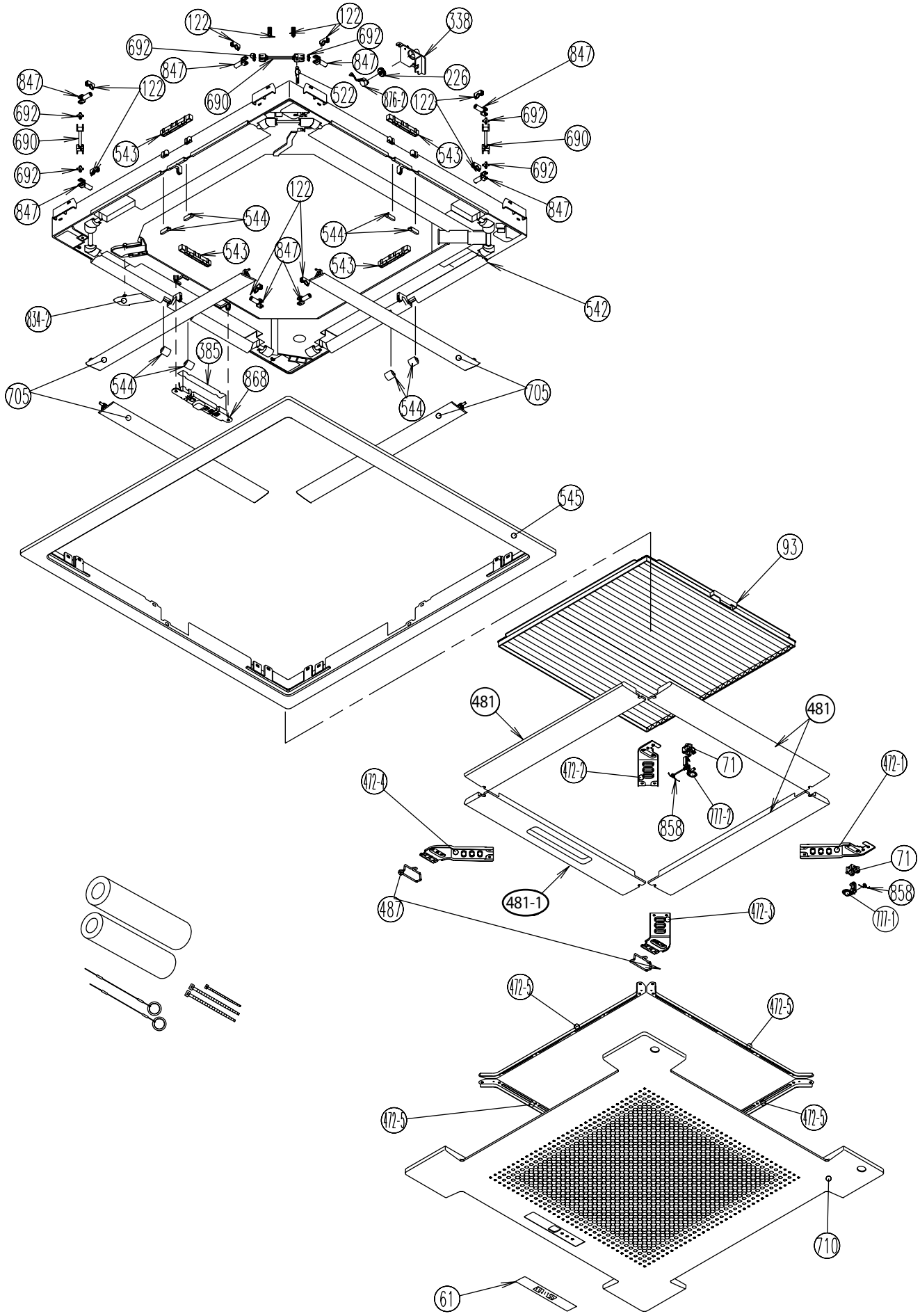

Model : AU 20UFARR
AU 25UFARR
AU 30UFARR

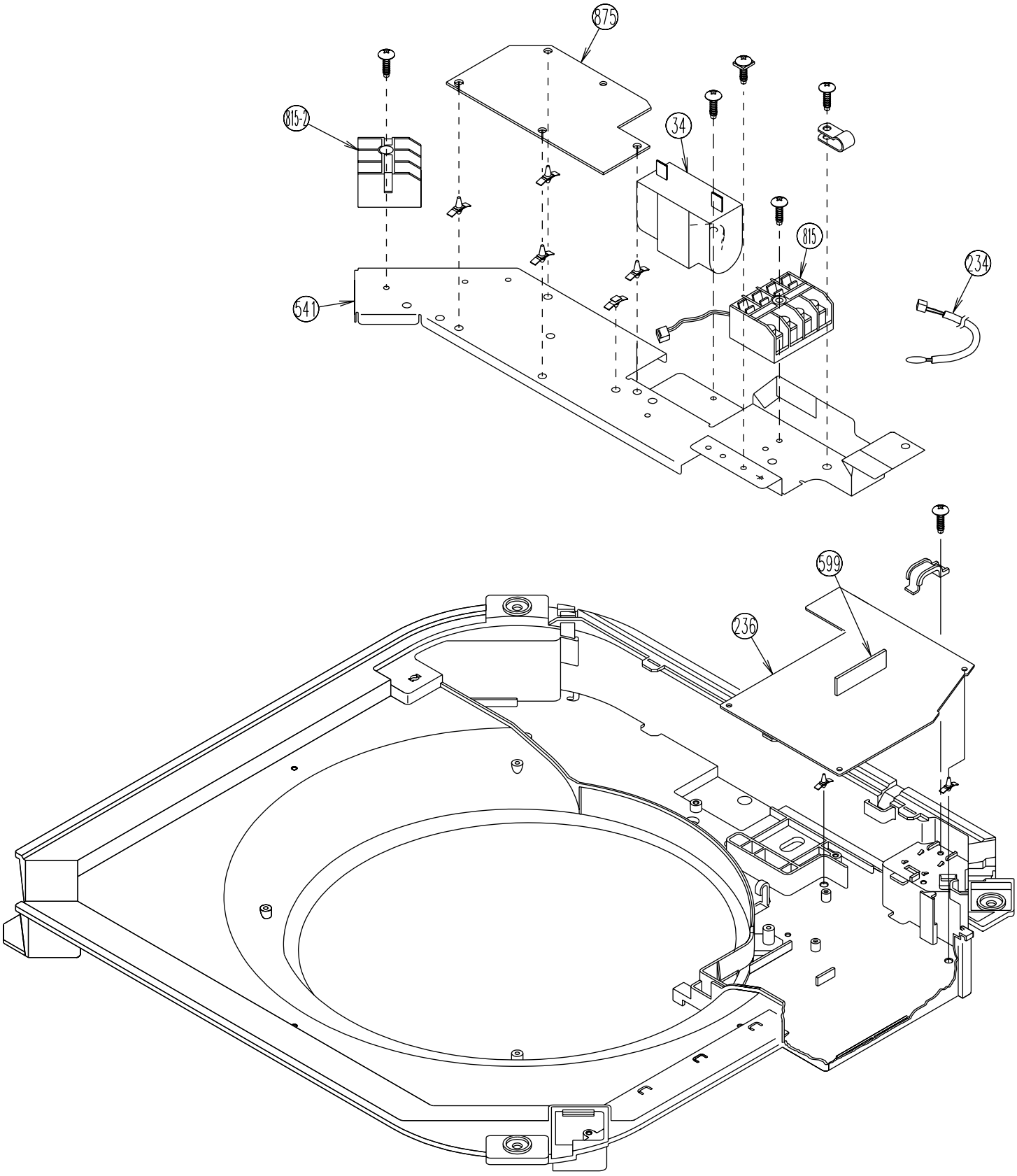

Models : AU 20UFARR
AU 25UFARR
AU 30UFARR

P A R T S L I S T

When you order parts, please make a photocopy of this page and fill the number of the parts in the "Order" column.

INDOOR UNIT

Ref No.	Description	Parts No.	Ord Q'ty
34	CAPACITOR (FAN MOTOR)	9900230029	
61	DECORATION PLATE	9365652008	
71	GRILLE HOOK HOLDER	9362782005	
93	FILTER	9362766005	
117-3	HEX.NUT W/SP.WASHER	301721180114	
122	LOUVER SUPPO.HOLDER	9362799003	
127	DRAIN HOSE	9365074008	
138	SEPARATE WALL	9362793001	
146-1	EVAPORATOR A AS	9373799030	
146-2	EVAPORATOR B AS	9373800033	
155	SPECIAL NUT M6	9307615016	
160	DRAIN PAN ASSY	9362804004	
160	KIT(DRN PAN SA)	9370934014	
164	FAN MOTOR ASSY-IN	9601558019	
168	CABINET-E	9362735001	
184-1	THERMO. SPRING-A	313728262708	
197	WIND GUIDE BOARD	9373444015	
218-3	RELAY	9701316014	
223	CONTROL BOX	9362762007	
226	MOTOR GEAR	9362764001	
234	THERMISTOR ASSY-ROOM	9703299025	
235-1	PIPE TH	9900220013	
235	THERMISTOR ASSY(PIPE	9703297106	
236	CONTROLLER PCB ASSY	9705491076	
240	REMOCON ASSY	9371190198	
244	PIPE COVER	9362748001	
329	COUPLING PIPE AS	9371333038	
337-1	REIN FORCEMENT(EVA)-A	9362749008	
337-2	REIN FORCEMENT(EVA)-B	9362750004	
338	MOTOR HOLDER	9362765008	
385	INDICATOR PCB ASSY	9704017017	
457	REINFORCEMENT	9362757003	
460-1	PUMP COVER-A	9362775007	
460-2	PUMP COVER-B	9362776004	
462	TOP COVER PLATE ASSY	9362806022	
464	CABINET A ASSY	9362807012	
465	CABINET B ASSY	9362808019	
467	DRAIN PORT	9362786003	
472-1	RFM(GRILLE)A	9362738002	
472-2	RFM(GRILLE)B	9362739009	
472-3	RFM(GRILLE)C	9362740005	
472-4	RFM(GRILLE)D	9362741002	
472-5	RFM(GRILLE)E	9362742009	
474	TURBO FAN ASSY	9362810012	
476-2	SPECIAL WASHER	9362756006	
474	TURBO FAN ASSY	9362810012	
477	BELL-MOUTH(B)	9362774000	
479	FLOAT SWITCH	9703285004	
481	INSULATION(GRILLE)A	9362780001	

Ref No.	Description	Parts No.	Ord Q'ty
481-1	INSULATION(GRILLE)B	9362781008	
482	PUMP UNIT	9703125010	
484	HOOK	9362736008	
487	GRILLE HINGE WIRE	9362754002	
488	DRAIN PAN PLUG	313005174654	
514	CONTROL BOX COVER	9362763004	
522	JOINT GEAR	9362772006	
541	TERMINAL PLATE	9363642001	
542	PANEL BASE	9362759014	
543	PANELFRAME HOLDER	9362761017	
544	PANEL BASE HOLDER	9362760010	
545	PANEL FRAME	9362758017	
563	INSULATION (INNER BOX)	9362797009	
565	EVA HOLDER ASSY	9362802024	
599	SINGAL PCB ASSY	9705263017	
690	JOINT-A	9362773003	
692	JOINT SHAFT	9362771009	
705	LOUVER	9362769013	
710	INTAKE GRILLE	9362767019	
735	DISTRIBUTOR AS L009	9371325057	
743	REMOCON HOLDER CASE	9305642014	
777-1	GRILLE HOOK-A	9362779012	
777-2	GRILLE HOOK-B	9362778015	
798	PUMP HOOK BRACKET	9362753005	
803	CABINET D	9362792004	
814	CABINET C	9362791007	
815	TERMINAL 4P	9306488055	
815-2	TERMINAL 3P	9703345012	
834-1	WIRE COVER-A	9362789004	
834-2	WIRE COVER-B	9362788007	
835	COSHION RUBBER (PUMP)	9362777001	
846	RELAY	9900007010	
847	LOUVER SUPPORTER	9362770019	
858	GRILLE SPRING	9362755009	
868	HOLDER(PCB)	9364855004	
875	FILTER PCB ASSY	9704799135	
876-2	STEP MOTOR	9360307019	
903	RUBBER(VIBU PROOF)A	9364891002	
904	RUBBER(VIBU PROOF)B	9364892009	
998	BYPASS PIPE A L614	9371324036	
999	BYPASS PIPE B L614	9371346045	
999-1	BYPASS PIPE C L614	9371619026	
824	FUSE	0600365097	
824-3	FUSE	0600222512	
-	RELAY SOLID	9704297037	
-	LOUVER SUB ASSY	9362836012	

Model : AU 36UFASR
AU 45UFASR
AU 54UFASR

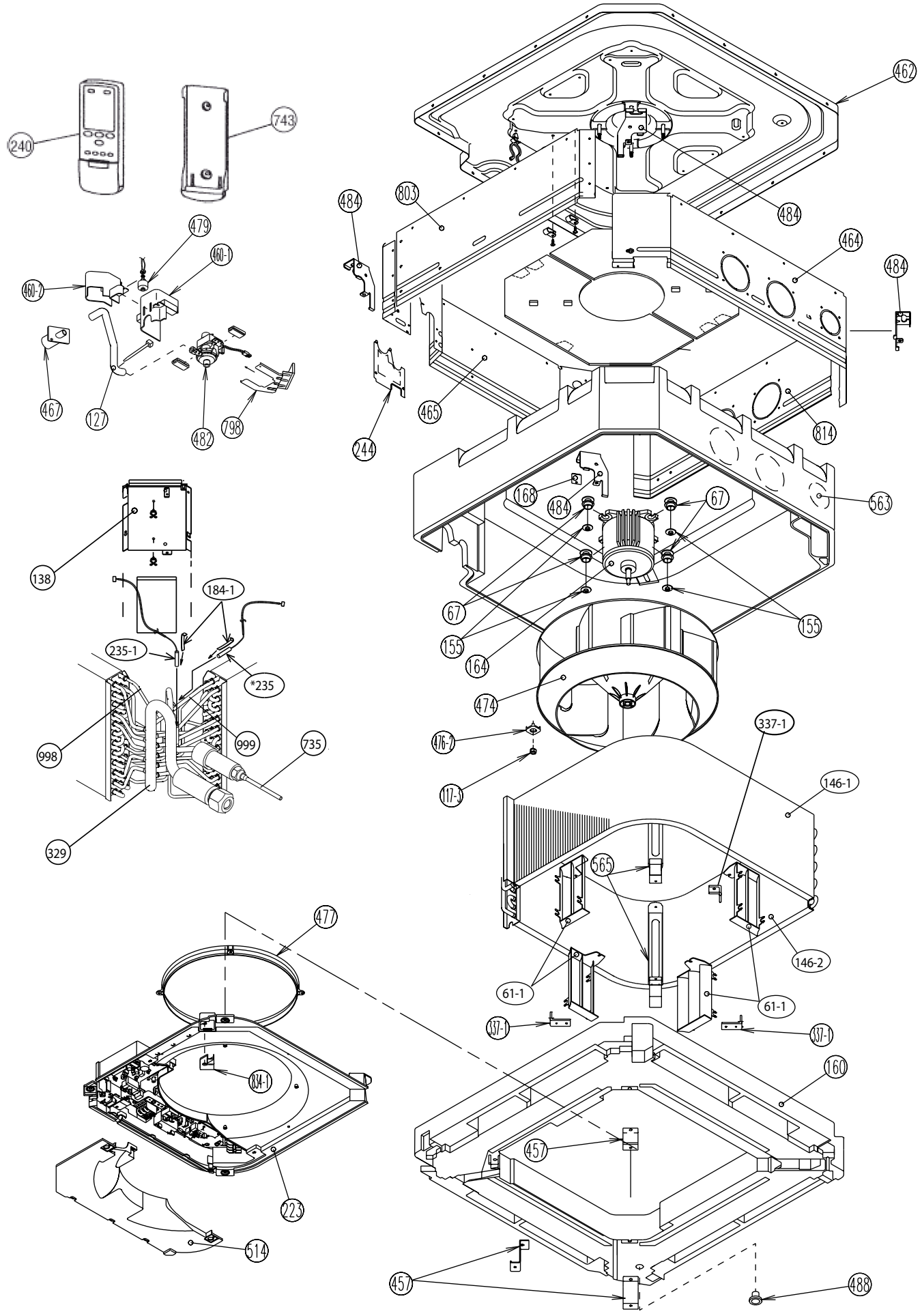

Model : AU 36UFASR
AU 45UFASR
AU 54UFASR

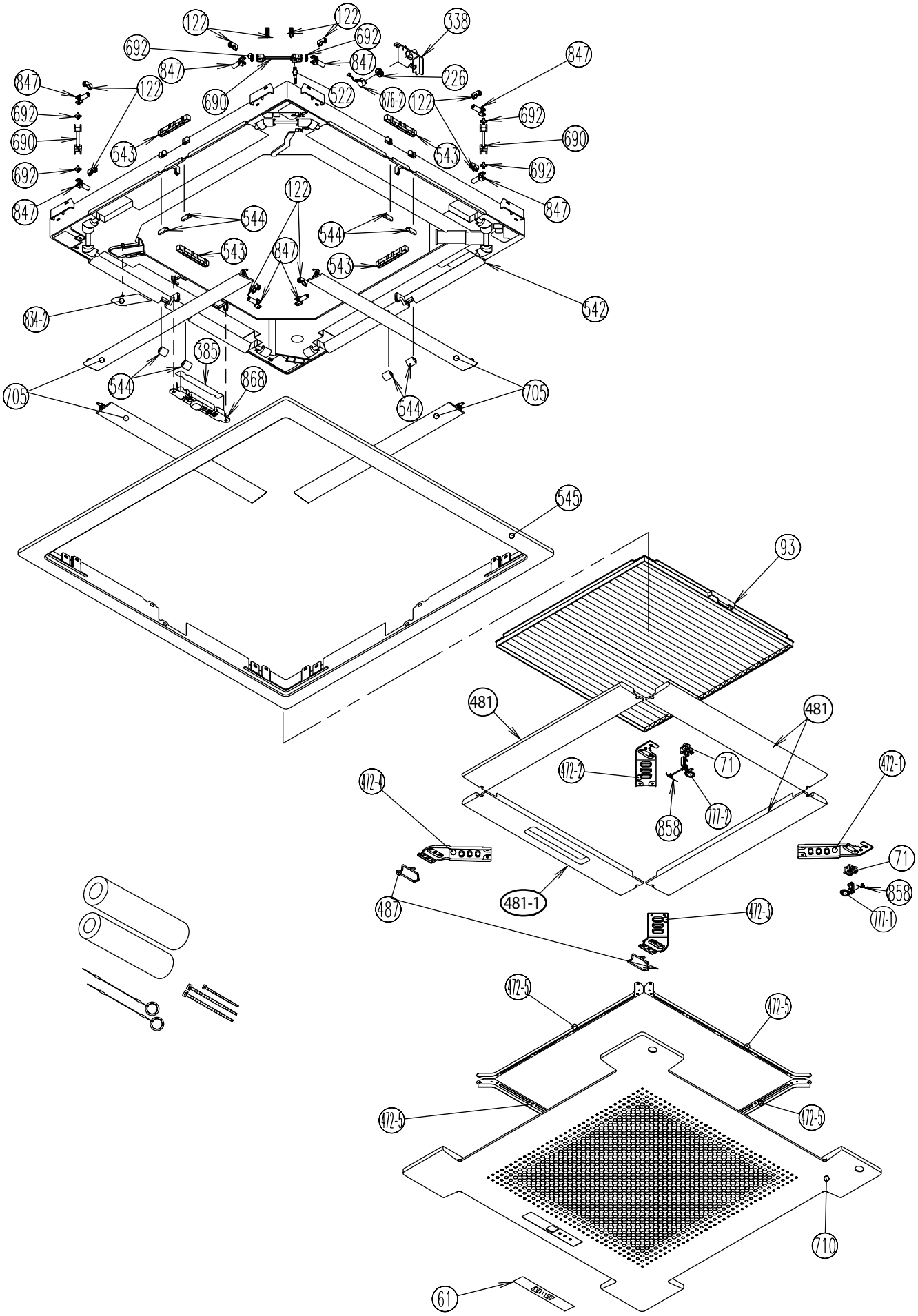

Model : AU 36UFASR
AU 45UFASR
AU 54UFASR

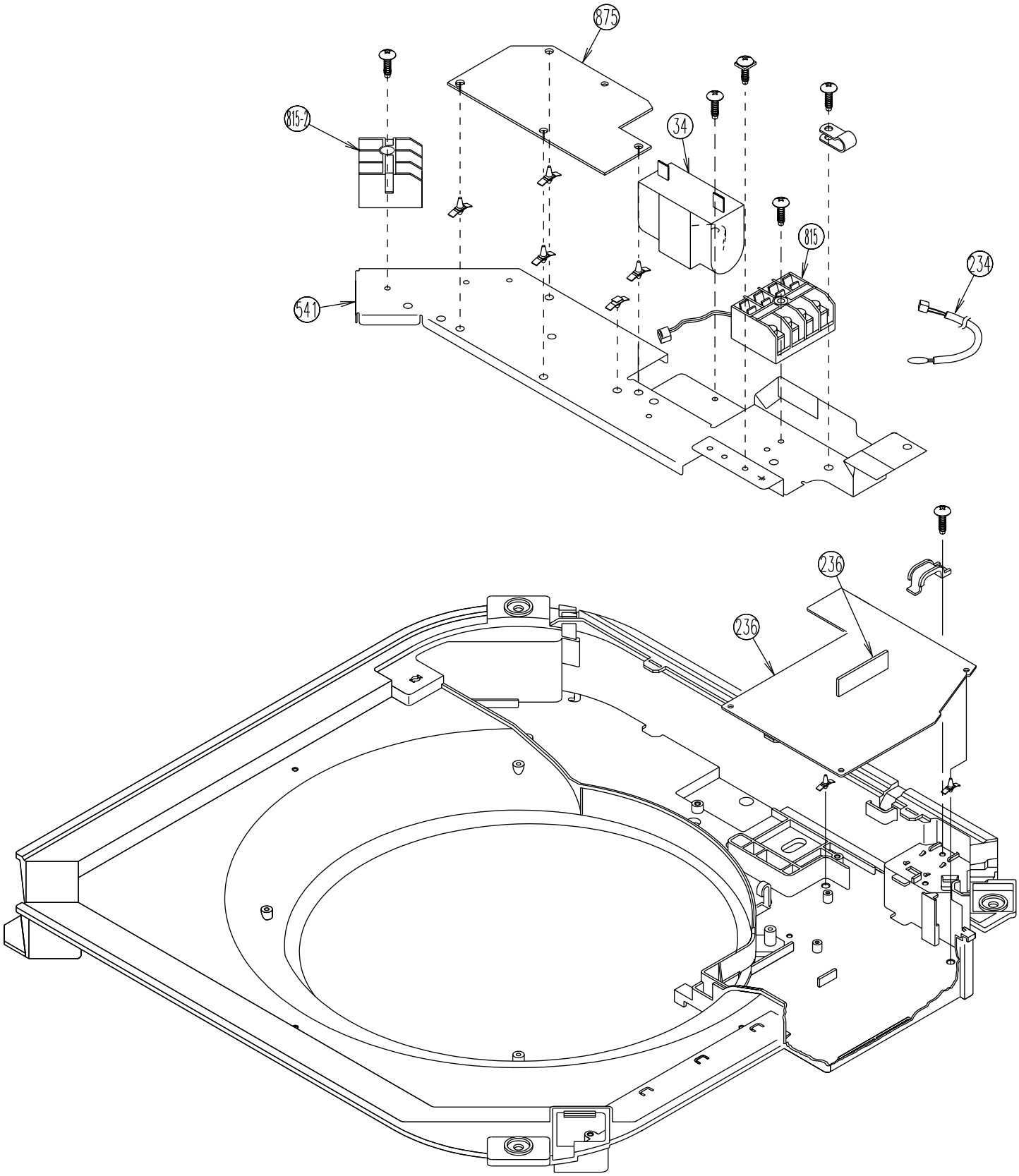

Model : AU 36UFASR
AU 45UFASR
AU 54UFASR

PARTS LIST

Ref No.	Description	Parts No.	ord Q'ty	Ref No.	Description	Parts No.	ord Q'ty
*34	FAN CAPACITOR	9900230029		*482	PUMP UNIT	9703125010	
61	DECORATION PLATE	9365652008		484	HOOK	9362736008	
61-1	WIND GUIDE BOARD	9373444015		487	GRILLE HINGE WIRE	9362754002	
67	RUBBER(VIBRATION PROOF)	9362783002		*488	RUBBER CAP	313005174654	
*71	GRILLE HOOK HOLDER	9362782005		514	CONTROL BOX COVER	9362763004	
93	FILTER	9362766005		522	JOINT GEAR	9362772006	
117-3	HEX.NUT W/SP.WASHER	301721180114		541	TERMINAL PLATE	9363642001	
122	LOUVER SUPPO.HOLDER	9362799003		*542	PANEL BASE	9362759014	
127	DRAIN HOSE	9362784009		543	PANEL FRAME HOLDER	9362761017	
138	SEPARATE WALL	9362737005		544	PANEL BASE HOLDER	9362760010	
146-1	EVA A ASSY	9373799023		545	PANEL FRAME	9362758017	
146-2	EVA B ASSY	9373800026		563	INSULATION(INNER BOX)	9352768009	
155	SPECIAL NUT M6	9307615016		565	EVA.HOLDER ASSY	9362802017	
160	KIT(DRN PAN SA)	9370934014		690	JOINT-A	9362773003	
*164	FAN MOTOR ASSY-IN	9600878019		692	JOINT SHAFT	9362771009	
168	CABINET-E	9362735001		705	LOUVER SUB ASSY	9362836012	
184-1	THERMISTOR SPRING A	313728262708		710	INTAKE GRILLE	9362767019	
223	CONTROL BOX	9362762007		735	DISTRIBUTOR ASSY	9373801016	
226	MOTOR GEAR	9362764001		*743	REMOCON HOLDER CASE	9305642014	
234	THERMISTOR ASSY-ROOM	9703299025		777-1	GRILLE HOOK-A	9362779012	
235-1	PIPE THERMISTOR	9900220020		777-2	GRILLE HOOK-B	9362778015	
*235	THERMISTOR ASSY-PIPE	9703297014		798	PUMP HOOK BRACKET	9362753005	
236-1	SIGNAL PCB ASSY	9705263017		803	CABINET-D	9362734004	
236-2	CONTROLL PCB ASSY	9705491083		814	CABINET-C	9362733007	
240	REMOCON ASSY	9371190198		*815	TERMINAL 4P	9306488055	
*244	PIPE COVER SUB ASSY	9362819015		815-2	TERMINAL 3P	9703345012	
329	COUPLING PIPE ASSY	9373815013		834-1	WIRE COVER-A	9362789004	
337-1	REINFORCEMENT(EVA)-A	9362749008		834-2	WIRE COVER-B	9362788007	
337-2	REINFORCEMENT(EVA)-B	9362750004		847	LOUVER SUPPORTER	9362770019	
338	MOTOR HOLDER	9362765008		858	GRILLE SPRING	9362755009	
385	INDICATOR PCB ASSY	9704017017		868	HOLDER(PCB)	9364855004	
457	RFM(DRAIN PAN)	9362757003		875	FILTER PCB ASSY	9704799135	
460-1	PUMP COVER-A	9362775007		876-2	STEP MOTOR	9360307019	
460-2	PUMP COVER-B	9362776004		998	BYPASS PIPE A	9373839019	
462	TOP COVER PLATE	9362806015		999	BYPASS PIPE B ASSY	9373368014	
464	CABINET-A	9362800013			U PIPE A AS	9303428016	
465	CABINET-B	9362801010			U PIPE B AS	9303430019	
467	DRAIN PORT	9362786003			FLARE NUT-A	9357352022	
472-1	RFM(GRILLE)A	9362738002			FLARE NUT-B	9352769009	
472-2	RFM(GRILLE)B	9362739009			RELAY SOLID	9704297037	
472-3	RFM(GRILLE)C	9362740005			HOOK WIRE	9363168006	
472-4	RFM(GRILLE)D	9362741002			VARISTOR (ARRESTER)	0600168032	
472-5	RFM(GRILLE)E	9362742009			VARISTOR	0000361224	
474	TURBO FAN ASSY	9362803014			FLANGE NUT-SERRATED	9385194014	
*476-2	WASHER(TURBO FAN)	9362756006			SPECIAL NUT-B(SMALL)	313005446759	
477	BELL-MOUTH(B)	9362774000			SPECIAL NUT-A(LARGE)	313005446653	
479	FLOAT SWITCH	9703285004			FUSE	0600365097	
481	INSULATION(GRILLE)A	9362780001			FUSE	0600222512	
481-1	INSULATION(GRILLE)B	9362781008			RELAY	9900007010	

Models : AR 7UFABR
AR 9UFABR

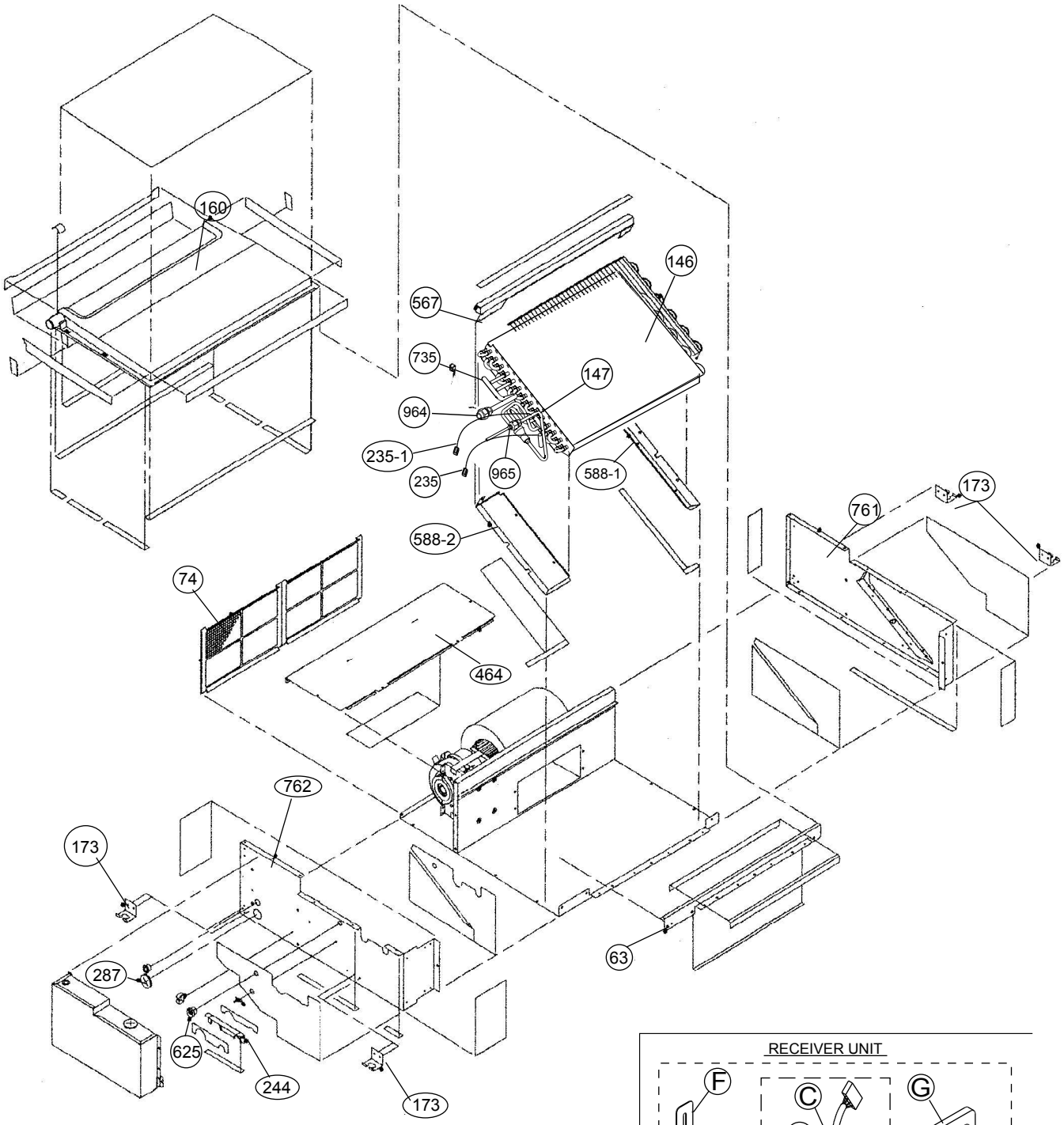

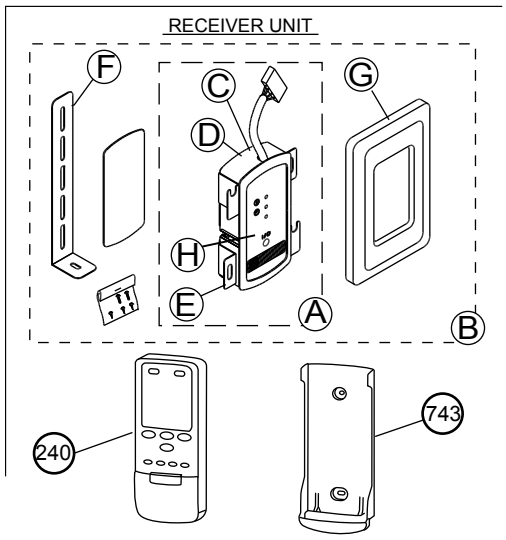

Ⓐ	RECEIVER UNIT ASSY	9372954010
Ⓑ	RECEIVER UNIT SA	9372950012
Ⓒ	HOLDER(PCB)	9372449011
Ⓓ	INDICATOR PCB ASSY	9705798021
Ⓔ	BRACKET(HOLDER)	9373078012
Ⓕ	HOOK METAL B	9373080015
Ⓖ	HLD CVR	9373079019
Ⓗ	FACE PNL(FRT)	9373278016

Models : AR 7UFABR
AR 9UFABR

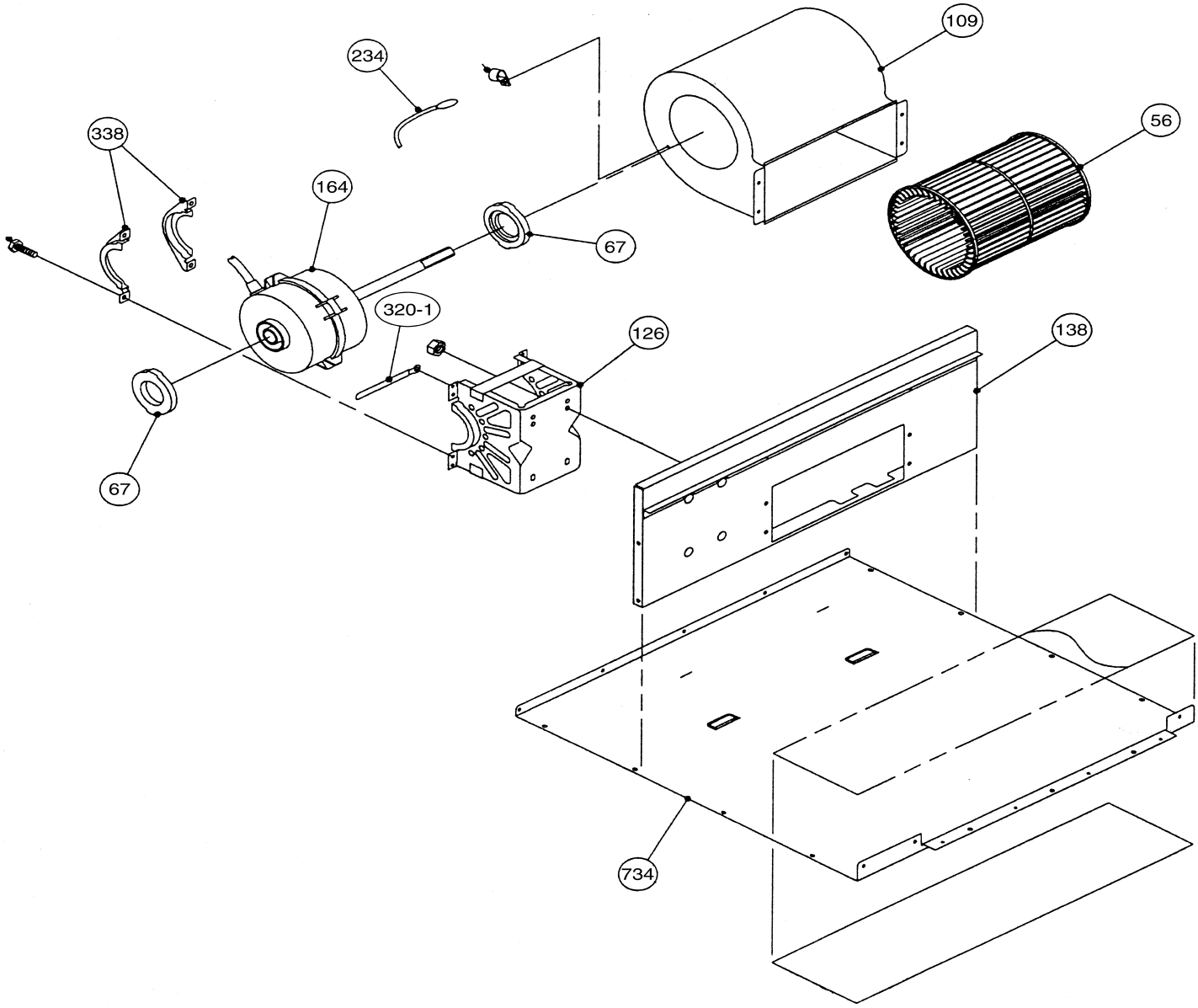

Models : AR 12UFADR
AR 14UFADR
AR 18UFADR
AR 22UFADR

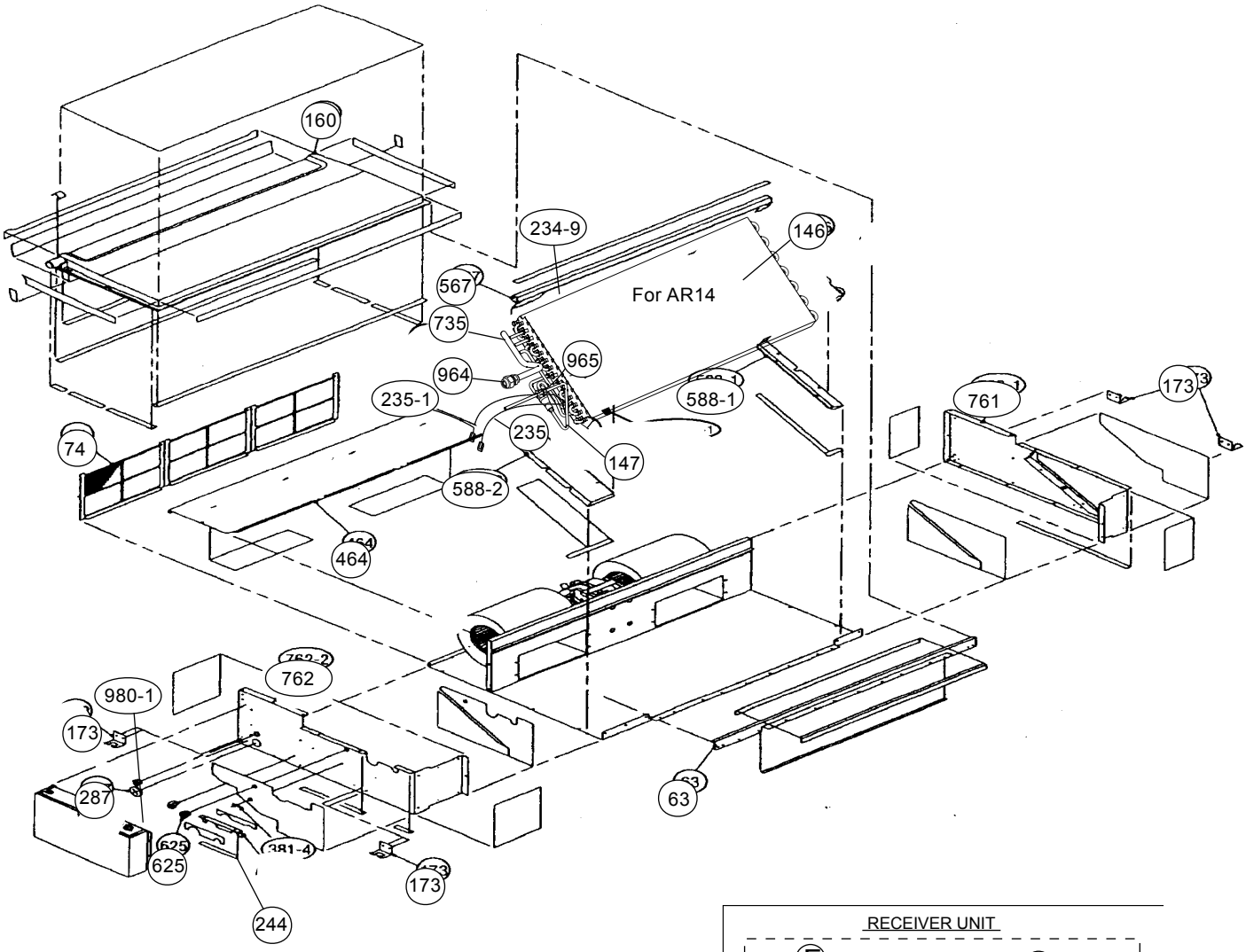

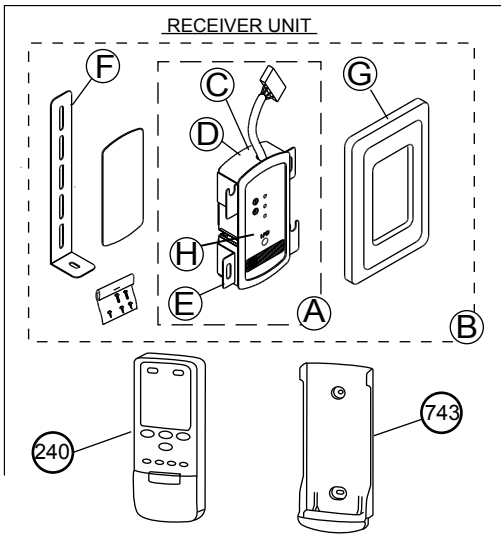

Ⓐ	RECEIVER UNIT ASSY	9372954010
Ⓑ	RECEIVER UNIT SA	9372950012
Ⓒ	HOLDER(PCB)	9372449011
Ⓓ	INDICATOR PCB ASSY	9705798021
Ⓔ	BRACKET(HOLDER)	9373078012
Ⓕ	HOOK METAL B	9373080015
Ⓖ	HLD CVR	9373079019
Ⓗ	FACE PNL(FRT)	9373278016

Models : AR 12UFADR
AR 14UFADR
AR 18UFADR
AR 22UFADR

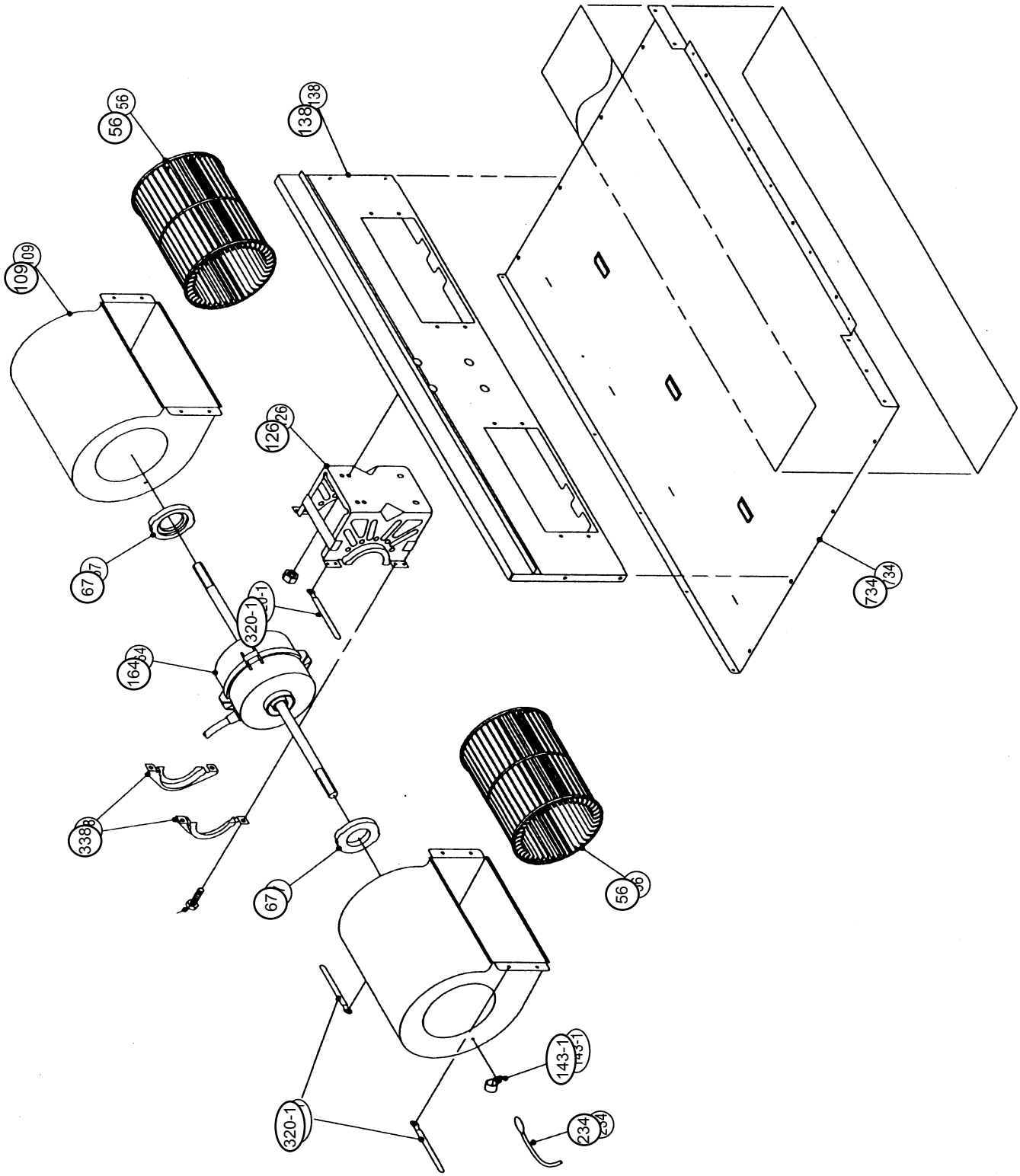

Models : AR 7UFABR
AR 9UFABR
AR 12UFADR
AR 14UFADR
AR 18UFADR
AR 22UFADR

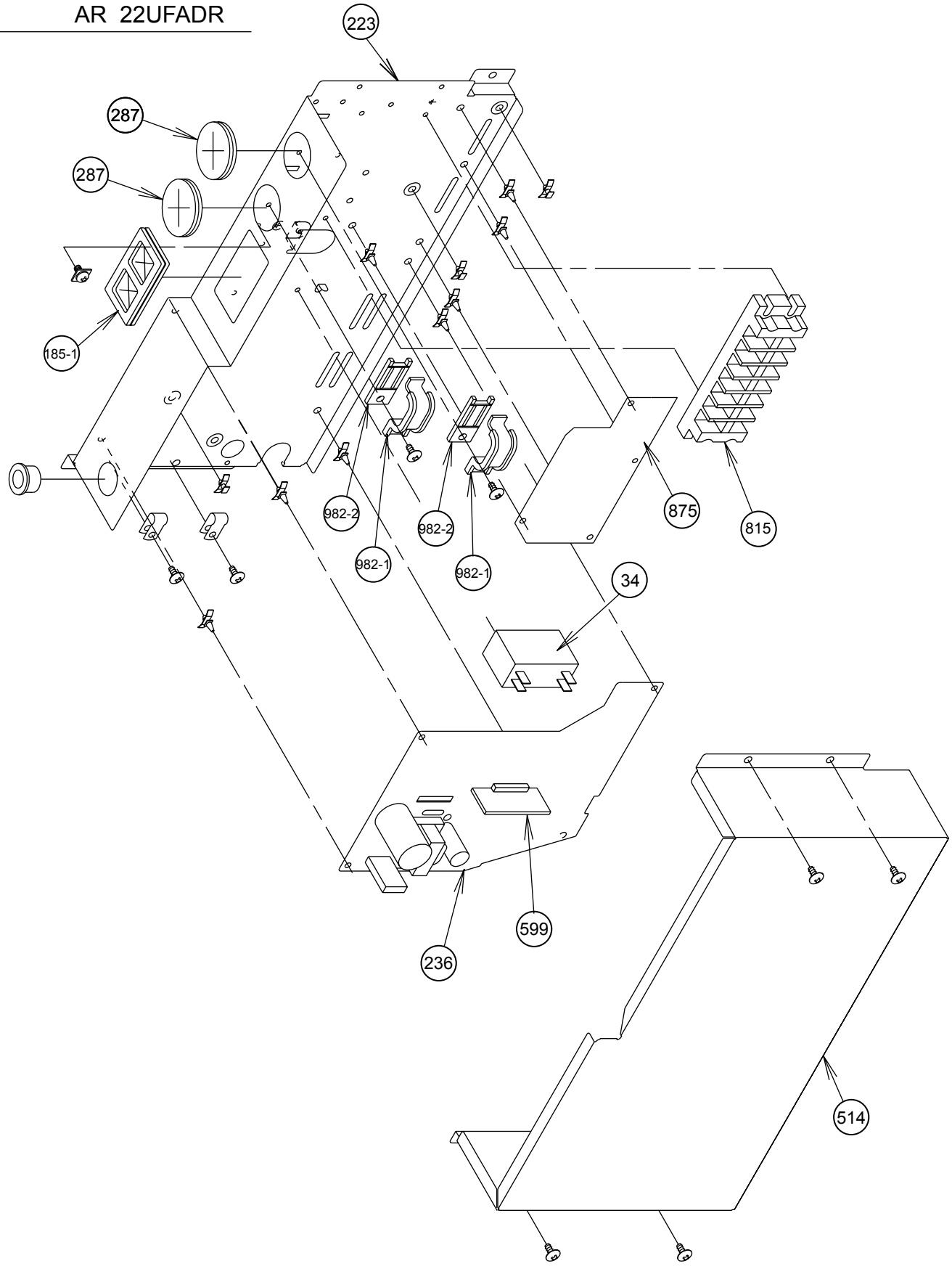

Models : AR 7UFABR
AR 9UFABR

P A R T S L I S T

When you order parts, please make a photocopy of this page and fill the number of the parts in the "Order" column.

INDOOR UNIT

Ref No.	Description	Parts No. AR 7UFABR / AR 9UFABR	Ord Q'ty	Ref No.	Description	Parts No. AR 7UFABR / AR 9UFABR	Ord Q'ty
34	CAPACITOR(FAN MOTOR)	9900270179		599	SIGNAL PCB ASSY (EZ-003RHSE-C)	9705263017	
56	SIROCCO FAN AS	9385258006		625	CORD BUSHING	9359240006	
63	PANEL ASSY(FRONT)	9363722000		734	PANEL TOP	9363408003	
67	RUB(VIBRATION PROOF)	9385102002		735	COUPLING PIPE ASSY	9373038078	
74	AIR FILTER	9366833017		761	SIDE PANEL-R ASSY	9363411003	
109	CASING ASSY	9363322002		762	SIDE PANEL-L ASSY	9363409000	
126	MOTOR FIXG TABLE ASY	9358591000		743	REMOTE CONTROL HOLDER	9305642014	
138	PANEL ASSY(MOTOR)	9363193008		815	TERMINAL 7P	9703403040	
146	EVA SUB ASSY	9364499147		875	FILTER PCB ASSY (EZ-00318HSE-P)	9704799104	
147	DISTRIBUTOR ASSY	9373034070		953	HOLDER COVER AS	9372949016	
160	DRAIN PAN	9364502014		964	FLARE NUT-A (D9.53)	9357352022	
164	MOTOR,INDUCT	9601722014		965	FLARE NUT-B (FOR D6.35)	9351062019	
173	HANGER BRACKET	9363195002		982-1	CORD CLAMP	9356857009	
185-1	RUBBER BUSHING	9357376004		982-2	CORD CLAMP-B	9356858006	
223	CONTROL BOX	9366299004			VARISTOR (TNR10V471K)	0000361224	
234	THERMISTOR ASSY-ROOM	9703299063			VARISTOR (DSA-362MA-05 3.6KV)	0600168032	
235	THERMISTOR ASSY -PIPE	9703297069			WIRE(FAN CAPA) 2P,L=150	9703576010	
235-1	PIPE THERMISTOR	9900220037			WIRE(RC) 3P, L=380	9703397011	
236	CONTROLLER PCB ASSY	9705491045			TRANS,SW (ETS28AU1W8AC.AC240V)	9704658012	
240	REMOTE CONTROL UNIT (AR-JW19)	9371190198			FUSE (BET 3.15A-250V)	0600222512	
244	COVER(PIPE)	9363330007			WIRE ASSY (UL1430 #22 2P)	9705463035	
287	CAP (POWER)	9352173011			WIRE(INDICATOR)	9702068042	
320-1	WIRE CLAMP METAL	313483219905			INDICATOR PCB	9705798021	
338	MOTOR FIXTURE	9358594001			RECIVER UNIT AS	9372954010	
464	COVER(CABINET)	9363325003					
514	CONTROL BOX COVER	9363201000					
567	SUPPORT PLATE(EVA)	9363323009					
588-1	BRACKET EVA R	9363199000					
588-2	BRACKET EVA L	9363198003					

Models : AR 12UFADR
AR 14UFADR

P A R T S L I S T

When you order parts, please make a photocopy of this page and fill the number of the parts in the "Order" column.

INDOOR UNIT

Ref No.	Description	Parts No. AR 12UFADR / AR 14UFADR	Ord Q'ty	Ref No.	Description	Parts No. AR 12UFADR / AR 14UFADR	Ord Q'ty
34	CAPACITOR(FAN MOTOR)	9900270179		599	SIGNAL PCB ASSY (EZ-003RHSE-C)	9705263017	
56	SIROCCO FAN AS	9385258006		625	CORD BUSHING	9359240006	
63	PANEL ASSY(FRONT)	9363723007		734	PANEL TOP	9363504002	
67	RUB(VIBRATION PROOF)	9385102002		735	COUPLING PIPE ASSY	9373038085	
74	FILTER	9366833017		743	REMOTE CONTROL HOLDER	9305642014	
109	CASING ASSY	9363322002		761	SIDE PANEL-R ASSY	9363507003	
126	MOTOR FIXG TABLE ASY	9358591000		762	SIDE PANEL-L ASSY	9363503009	
138	PANEL ASSY(MOTOR)	9363401004		815	TERMINAL 7P	9703403040	
146	EVA SUB ASSY	9364499154		875	FILTER PCB ASSY (EZ-00318HSE-P)	9704799104	
147	DISTRIBUTOR ASSY	9373034056		953	HOLDER COVER AS	9372949016	
160	DRAIN PAN SUB ASSY	9364502045		964	FLARE NUT A (1/2)	9310214015	
164	MOTOR,INDUCT	9601723011		965	FLARE NUT-B (D6.35)	9351062019	
173	HANGER BRACKET	9363195002		982-1	CORD CLAMP	9356857009	
185-1	RUBBER BUSHING	9357376004		982-2	CORD CLAMP-B	9356858006	
223	CONTROL BOX	9366299004			WIRE ASSY, (2P,L=150)	9703576010	
234	THERMISTOR ASSY-ROOM	9703299018			WIRE ASSY, (2P,L=230)	9702419035	
235	THERMISTOR ASSY -PIPE	9703297069			WIRE ASSY, (3P,L=380)	9703397011	
235-1	PIPE THERMISTOR	9900220037			WIRE ASSY (#26 2P)	9705464018	
236	CONTROLLER PCB ASSY	9705491045			WIRE ASSY (#22 2P)	9705463035	
240	REMOTE CONTROL UNIT (AR-JW19)	9371190198			VARISTOR (TNR10V471K)	0000361224	
244	COVER(PIPE)	9363327007			VARISTOR (DSA-362MA-05 3.6KV)	0600168032	
287	CAP (POWER)	9352173011			TRANS,SW (ETS28AU1W8AC.AC240V)	9704658012	
320-1	WIRE CLAMP METAL	313483219905			FUSE (BET 3.15A-250V)	0600222512	
338	MOTOR FIXTURE	9358594001			WIRE(INDICATOR)	9702068042	
464	COVER(CABINET)	9363400007			INDICATOR PCB (EZ-0964HSE-D)	9705798021	
514	CONTROL BOX COVER	9363201000			RECEIVER UNIT AS	9372954010	
567	SUPPORT PLT(EVA)	9363404005					
588-1	BRACKET EVA R	9363199000					
588-2	BRACKET EVA L	9363198003					

Models : AR 18UFADR
AR 22UFADR

P A R T S L I S T

When you order parts, please make a photocopy of this page and fill the number of the parts in the "Order" column.

INDOOR UNIT

Ref No.	Description	Parts No. AR 18UFADR / AR 22UFADR	Ord Q'ty	Ref No.	Description	Parts No. AR 18UFADR / AR 22UFADR	Ord Q'ty
34	CAPACITOR(FAN MOTOR)	9900270179		599	SIGNAL PCB ASSY (EZ-003RHSE-C)	9705263017	
56	SIROCCO FAN AS	9385258006		625	CORD BUSHING	9359240006	
63	PANEL ASSY(FRONT)	9363723007		734	PANEL TOP	9363504002	
67	RUB(VIBRATION PROOF)	9385102002		735	OUTLET(EVA)ASSY	9372978016	
74	AIR FILTER	9366833017		743	REMOTE CONTROL HOLDER	9305642014	
109	CASING ASSY	9363322002		761	SIDE PANEL-R ASSY	9363507003	
126	MOTOR FIXG TABLE ASY	9358591000		762	SIDE PANEL-L ASSY	9363503009	
138	PANEL ASSY(MOTOR)	9363401004		815	TERMINAL 7P	9703403040	
146	EVA SUB ASSY	9364499161		875	FILTER PCB ASSY (EZ-00318HSE-P)	9704799104	
147	INLET PP(EVA)ASSY	9372973011		953	HOLDER COVER AS	9372949016	
160	DRAIN PAN ASSY	9364502045		964	FLARE NUT A (5/8)	9373268017	
164	MOTOR,INDUCT	9601723028		965	FLARE NUT-B (D6.35)	9351062019	
173	HANGER BRACKET	9363195002		982-1	CORD CLAMP	9356857009	
185-1	RUBBER BUSHING	9357376004		982-2	CORD CLAMP-B	9356858006	
223	CONTROL BOX	9366299004			WIRE ASSY(CONNECTOR 08/08 L=1000)	9702068042	
234	THERMISTOR ASSY-ROOM	9703299018			WIRE ASSY (3P, L=380)	9703397011	
235	THERMISTOR ASSY -PIPE	9703297069			WIRE ASSY, (2P,L=150)	9703576010	
235-1	PIPE THERMISTOR	9900220037			WIRE ASSY (#26 2P)	9705464018	
236	CONTROLLER PCB ASSY	9705491045			WIRE ASSY (#22 2P)	9705463035	
240	REMOTE CONTROL UNIT (AR-JW19)	9371190198			VARISTOR (TNR10V471K)	0000361224	
244	COVER(PIPE)	9363327007			VARISTOR (DSA-362MA-05 3.6KV)	0600168032	
287	CAP (POWER)	9352173011			TRANS,SW (ETS28AU1W8AC.AC240V)	9704658012	
320-1	WIRE CLAMP METAL	313483219905			FUSE (BET 3.15A-250V)	0600222512	
338	MOTOR FIXTURE	9358594001			FUSE	0600365097	
464	COVER(CABINET)	9363400007			WIRE(INDICATOR)	9702068042	
514	CONTROL BOX COVER	9363201000			INDICATOR PCB (EZ-0964HSE-D)	9705798021	
567	SUPPORT PLT(EVA)	9363404005			RECEIVER UNIT ASSY	9372954010	
588-1	BRACKET EVA R	9363199000					
588-2	BRACKET EVA L	9363198003					

Model : AR 25UFAAR AR 30UFAAR

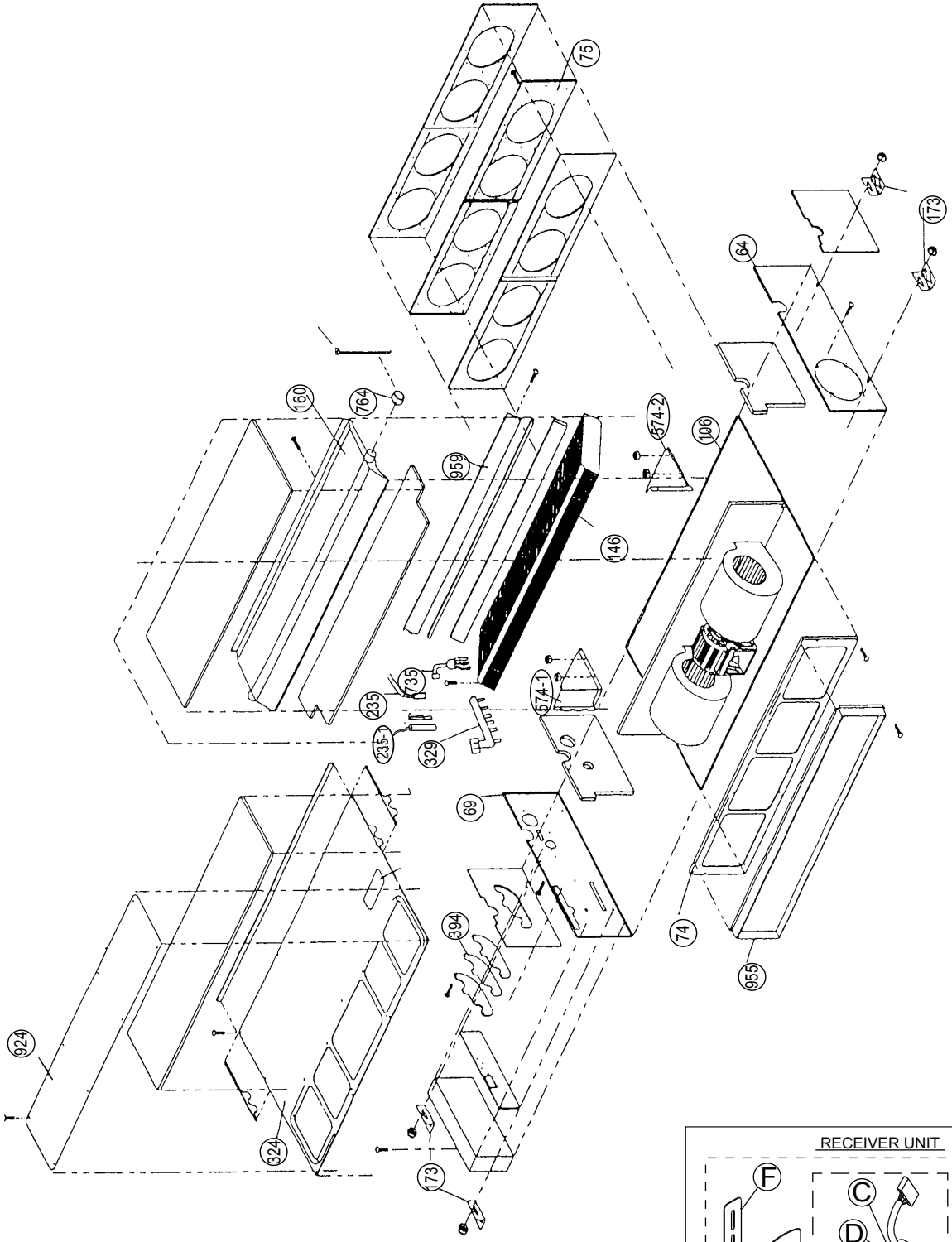

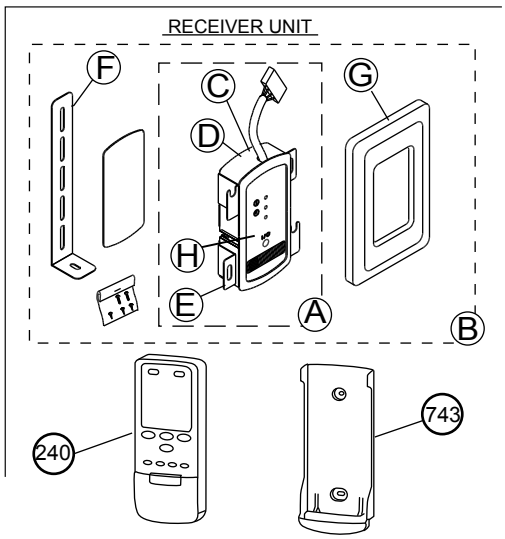

Ⓐ	RECEIVER UNIT ASSY	9372954010
Ⓑ	RECEIVER UNIT SA	9372950012
Ⓒ	HOLDER(PCB)	9372449011
Ⓓ	INDICATOR PCB ASSY	9705798021
Ⓔ	BRACKET(HOLDER)	9373078012
Ⓕ	HOOK METAL B	9373080015
Ⓖ	HLD CVR	9373079019
Ⓗ	FACE PNL(FRT)	9373278016

Model : AR 25UFAAR AR 30UFAAR

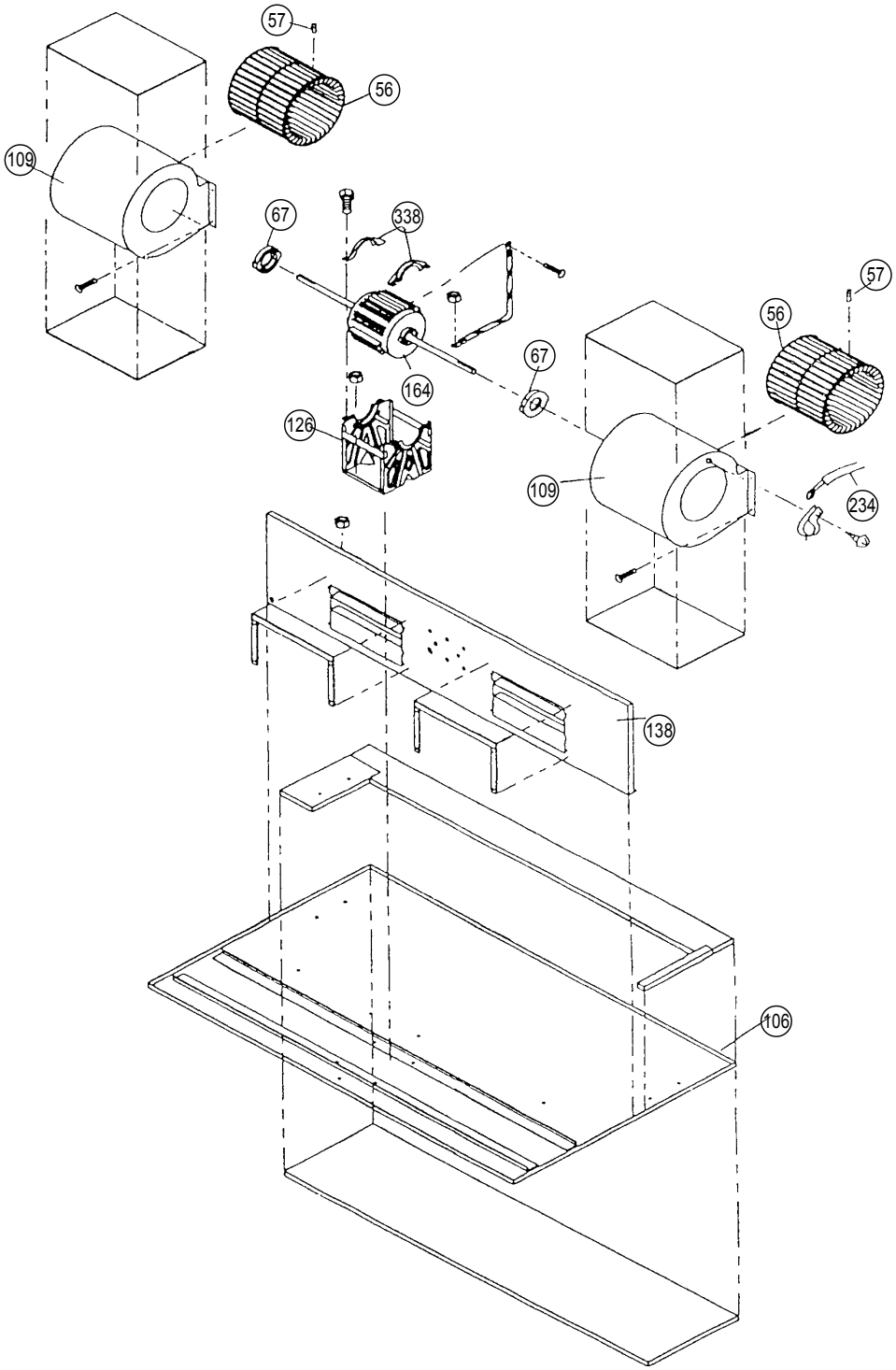

Model : AR 25UFAAR AR 30UFAAR

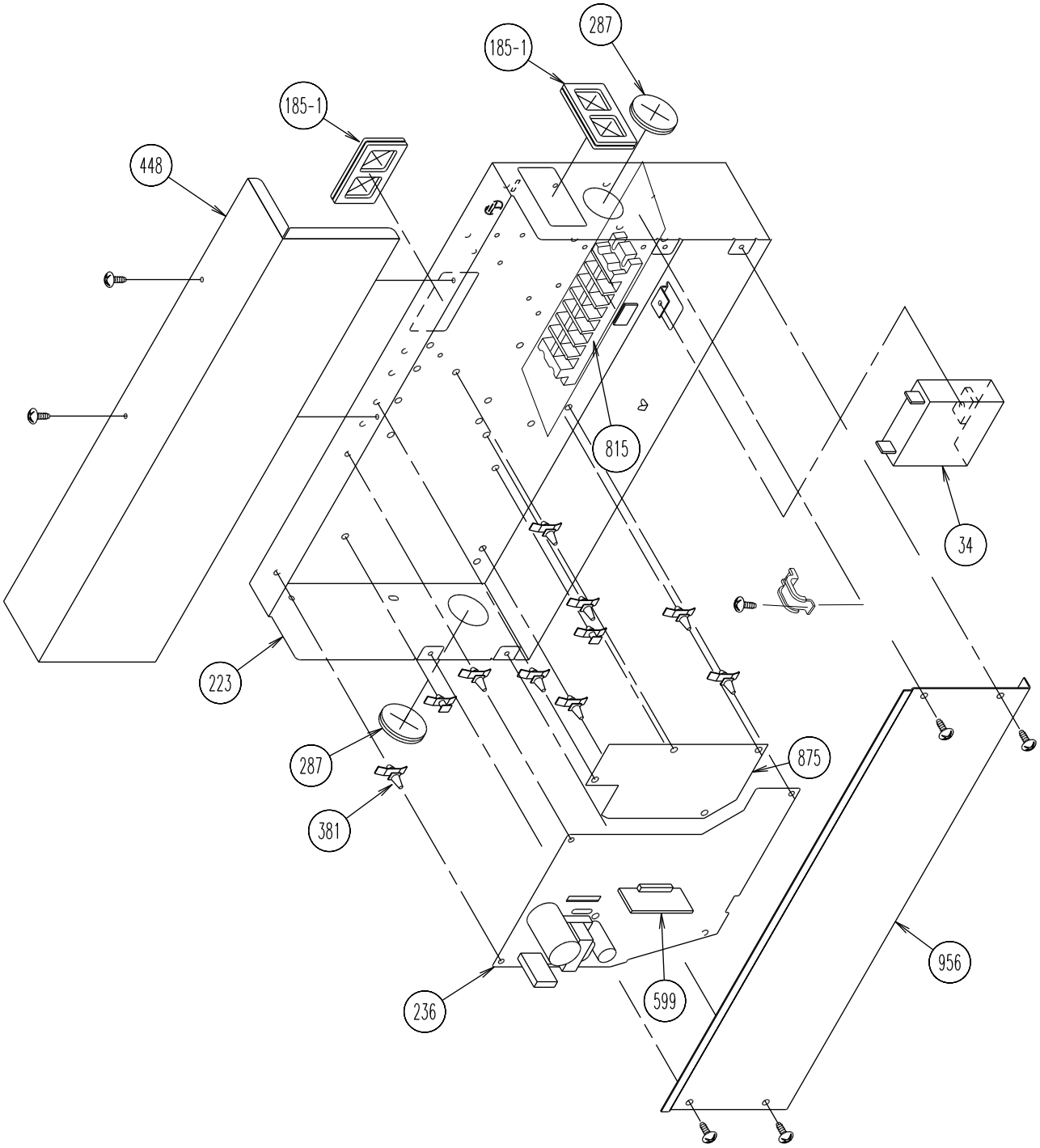

Models : AR 25UFAAR AR 30UFAAR

P A R T S L I S T

INDOOR UNIT

When you order parts, please make a photocopy of this page and fill the number of the parts in the "Order" column.

Ref No.	Description	Parts No.		Ref No.	Description	Parts No.	
		AR 25UFAAR	AR 30UFAAR			AR 25UFAAR	AR 30UFAAR
34	CAPACITOR (FAN MOTOR)	9900230012	9900230012	329	COUPLING PIPE AS	9371333021	9371333021
56	SIROCCO FAN ASSY	9356531022	9356531022	338	MOTOR FIXTURE	9356536003	9356536003
57	HEX. SOCKET SCREW	313616213202	313616213202	381	LOCKING SPACER	313209391506	313209391506
64	CABINET-LEFT	9356551006	9356551006	394	BRACKET PANEL(PIPE)	9366295006	9366295006
67	RUBBER	313659068604	313659068604	448	CONTROL BOX METAL-B	9356560008	9356560008
69	CABINET-RIGHT	9356547009	9356547009	574-1	EVA. FIXING PLATE-R	9356521009	9356521009
74	INTAKE PANEL	9356537000	9356537000	574-2	EVA. FIXING PLATE-L	9356522006	9356522006
75	OUTLET PANEL ASSY	9356538007	9356538007	599	SINGAL PCB ASSY	9705263017	9705263017
106	BASE ASSY	9356518009	9356518009	735	DISTRIBUTOR AS KA30	9371325033	9371325033
109	CASING ASSY	9356527001	9356527001	743	REMOCON HOLDER CASE	9305642014	9305642014
126	MOTOR FIXG TABLE ASY	9356533002	9356533002	764	DRAIN CAP	9356541007	9356541007
138	SEPARATE WALL	9356523003	9356523003	815	TERMINAL 7P	9703403040	9703403040
146	EVAPORATOR SUB ASSY	9356986273	9356986273	875	FILTER PCB ASSY	9704799111	9704799111
160	DRAIN PAN SUB ASSY	9356990010	9356990010	924	INTAKE SEAL PLATE	9356553000	9356553000
164	FAN MOTOR ASSY-IN	9600830024	9600830024	955	SQUARE FLANGE ASSY	9356555004	9356555004
173	HANGER BRACKET	9356563009	9356563009	956	CONTROL BOX METAL-E	9356900002	9356900002
185-1	RUBBER BUSHING	9357376004	9357376004	959	EVA. SEAL PLATE	9356540000	9356540000
223	CONTROL BOX METAL ASSY	9373904014	9373904014		FUSE	0600365097	0600365097
234	THERMISTOR ASSY-ROOM	9703299056	9703299056		FUSE	0600222512	0600222512
235	THERMISTOR ASSY-PIPE	9703297052	9703297052		RELAY JQ1-12V,AJQ1341-K1	9701316014	9701316014
235-1	PIPE TH	9900220013	9900220013		RELAY G5NB-1A DC12V	9900007010	9900007010
236	CONTROLLER PCB ASSY	9705491052	9705491052		REDUCER 18R ASSY	————	9373371021
240	REMOCON ASSY	9371190198	9371190198		WIRE(INDICATOR)	9702068042	9702068042
287	CAP (POWER)	9352173011	9352173011				
324	TOP PLATE	9356546002	9356546002				

Model : AR 36UFAAR AR 45UFAAR

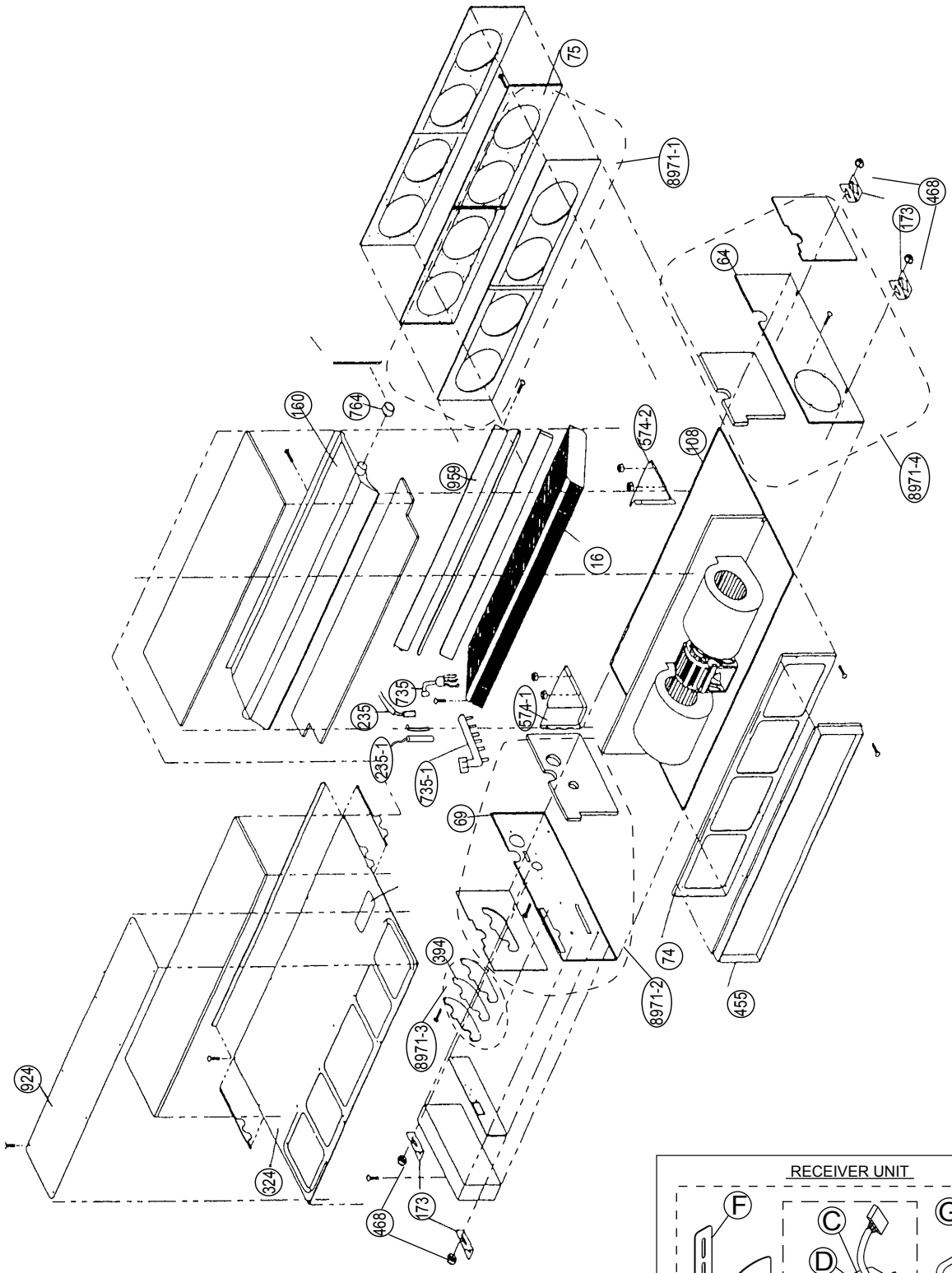

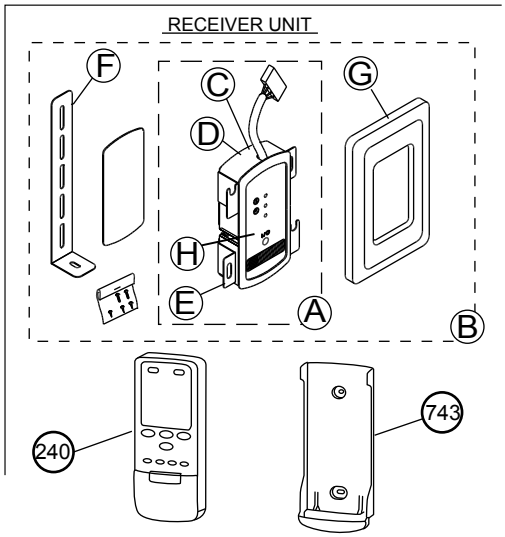

Ⓐ	RECEIVER UNIT ASSY	9372954010
Ⓑ	RECEIVER UNIT SA	9372950012
Ⓒ	HOLDER(PCB)	9372449011
Ⓓ	INDICATOR PCB ASSY	9705798021
Ⓔ	BRACKET(HOLDER)	9373078012
Ⓕ	HOOK METAL B	9373080015
Ⓖ	HLD CVR	9373079019
Ⓗ	FACE PNL(FRT)	9373278016

Model : AR 36UFAAR AR 45UFAAR

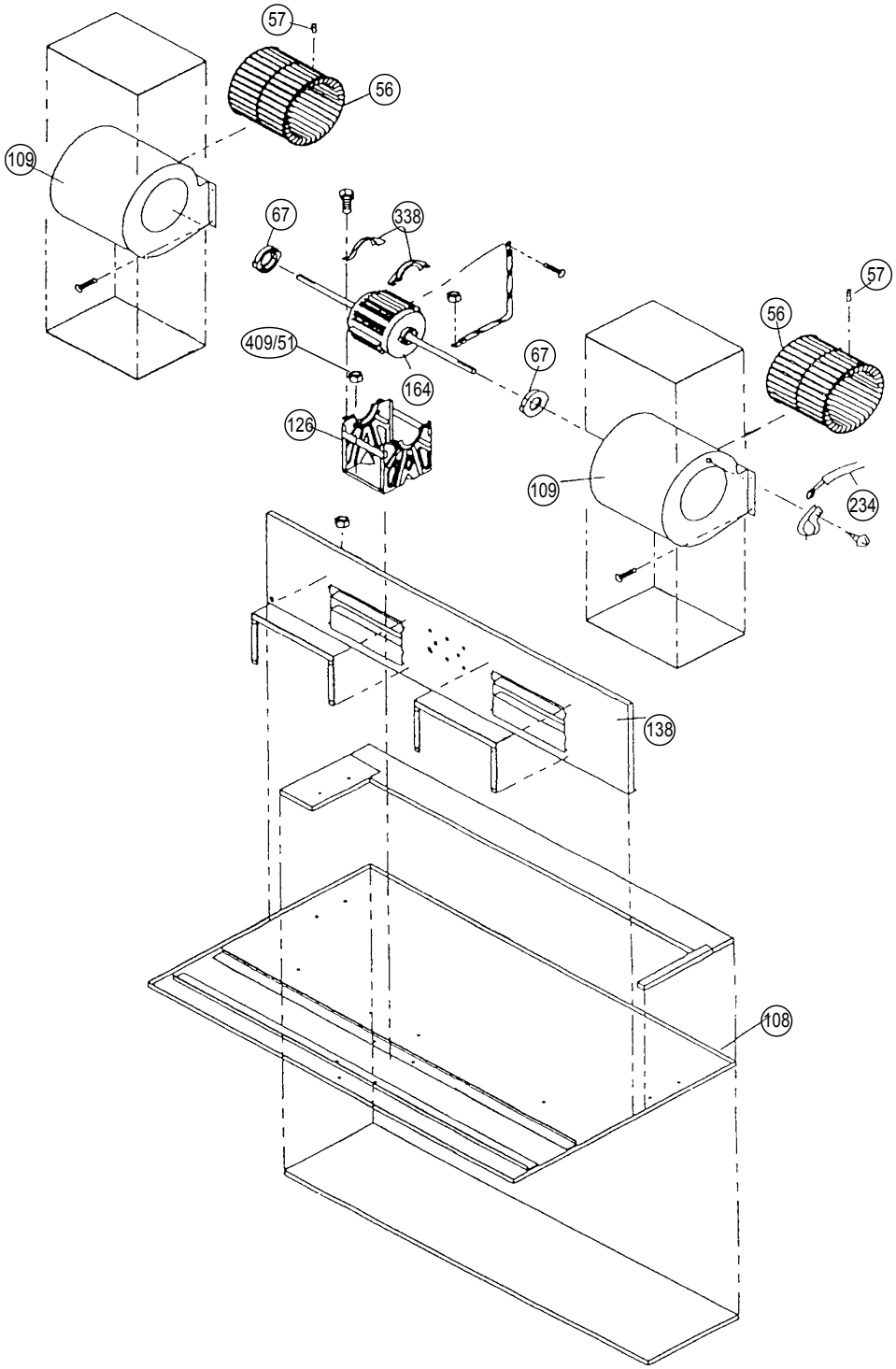

Model : AR 36UFAAR AR 45UFAAR

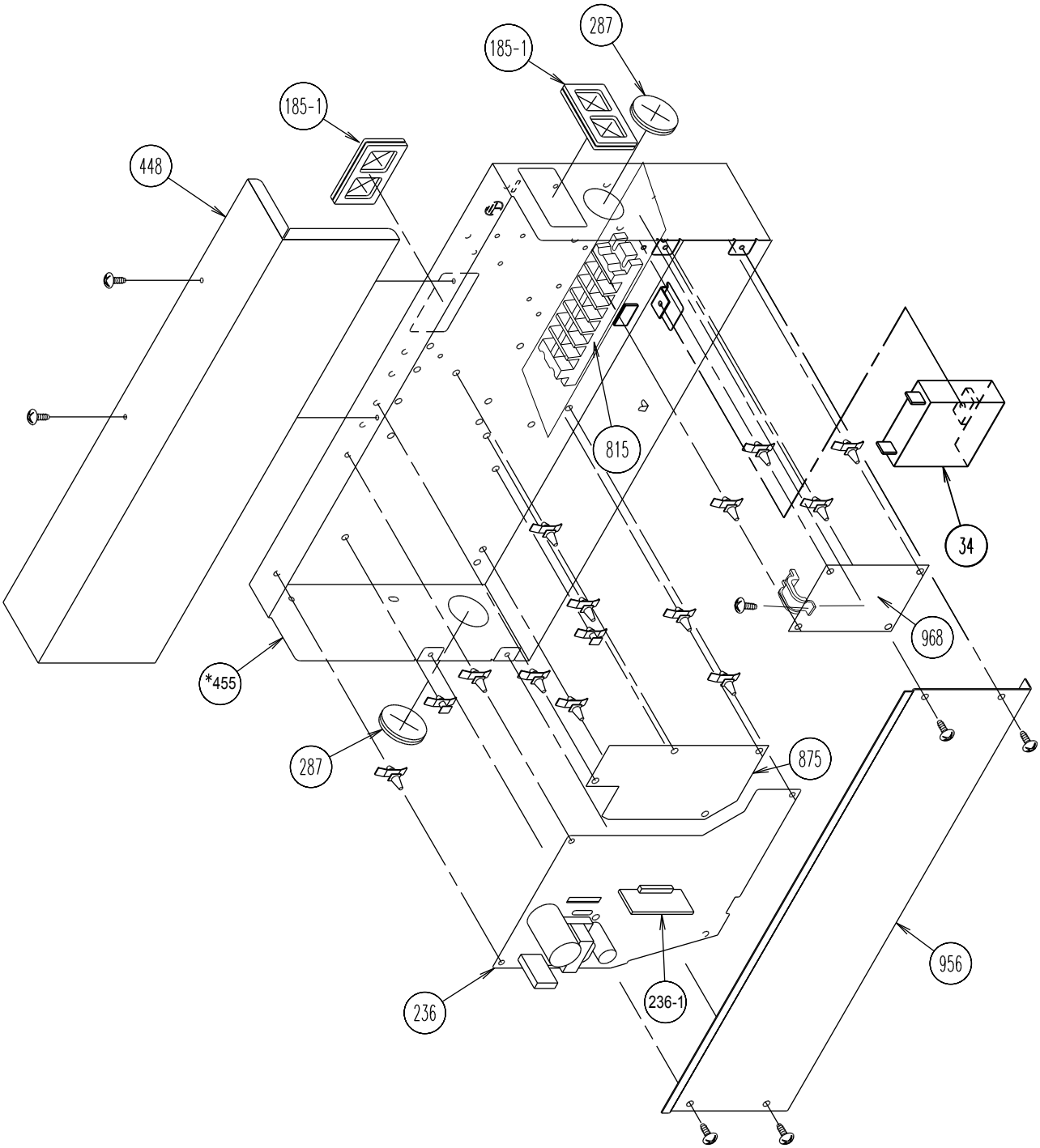

Model : AR 36UFAAR AR 45UFAAR

PARTS LIST

Ref No.	Description	Parts No.		ord Q'ty	Ref No.	Description	Parts No.		ord Q'ty
		AR 36UFAAR	AR 45UFAAR				AR 36UFAAR	AR 45UFAAR	
16	EVAPORATOR ASSY	9373865018	9373865018		*743	REMOCON HOLDER CASE	9305642014	9305642014	
*34	FAN CAPACITOR	9700468042	9700468042		764	DRAIN CAP	9356541007	9356541007	
56	SIROCCO FAN ASSY	9356531022	9356531022		*815	TERMINAL 7P	9703403040	9703403040	
57	HEX. SOCKET SCREW	313616213202	313616213202		875	FILTER PCB	9704799128	9704799128	
*64	CABINET LEFT ASSY	9356551006	9356551006		924	INTAKE SEAL PLATE	9356553000	9356553000	
67	RUBBER	313659068604	313659068604		956	CONTROL BOX METAL-E	9356900002	9356900002	
69	CABINET-RIGHT	9356547009	9356547009		959	EVA.SEAL PLATE	9356540000	9356540000	
74	INTAKE PANEL	9356537000	9356537000		968	RELAY PCB ASSY	9701594030	9701594030	
75	OUTLET PANEL ASSY	9356538007	9356538007		8971-1	KIT(OLET PNL AS)	9372689011	9372689011	
108	BASE ASSY	9356518009	9356518009		8971-2	KIT(CAB R AS)	9372687017	9372687017	
109	CASING ASSY	9356527001	9356527001		8971-3	PIPE FIXING PLATE AS	9356992021	9356992021	
126	MOTOR FIXG TABLE ASY	9356533002	9356533002		8971-4	KIT(CAB L AS)	9372688014	9372688014	
138	SEPARATE WALL	9356523003	9356523003		A	RECEIVER UNIT ASSY	9372954010	9372954010	
160	DRAIN PAN ASSY	9356542028	9356542028		B	RECEIVER UNIT SA	9372950012	9372950012	
*164	FAN MOTOR	9600830017	9600830017		C	HOLDER(PCB)	9372449011	9372449011	
*173	HANGER	9356563009	9356563009		D	INDICATOR PCB ASSY	9701873036	9701873036	
185-1	RUBBER BUSHING	9357376004	9357376004		E	BRACKET(HOLDER)	9373078012	9373078012	
234	THERMISTOR ASSY-ROOM	9703299056	9703299056		F	HOOK METAL B	9373080015	9373080015	
235	THERMISTOR ASSY-PIPE	9703297052	9703297052		G	HLD CVR	9373079019	9373079019	
235-1	PIPE THERMISTOR	9900220013	9900220013		H	FACE PNL(FRT)	9373278016	9373278016	
*236	CONTROLLER PCB ASSY	9705491069	9705491069			U PIPE H AS	9372367018	9372367018	
236-1	SIGNAL PCB ASSY	9705263017	9705263017			U PIPE A AS	9303428016	9303428016	
240	REMOCON ASSY	9371190198	9371190198			U PIPE B AS	9303430019	9303430019	
287	CAP (POWER)	9352173011	9352173011			U PIPE V	9305748006	9305748006	
324	TOP PLATE	9356546002	9356546002			FLARE NUT-A	9357352022	9357352022	
338	MOTOR FIXTURE	9356536003	9356536003			FLARE NUT-B	9352769009	9352769009	
394	BRACKET PANEL(PIPE)	9366295006	9366295006			RELAY, SOLID	9701719013	9701719013	
409/51	FLANGE NUT-SERRATED	9385194014	9385194014			VARISTOR (ARRESTER)	0600168032	0600168032	
448	CONTROL BOX METAL-B	9356560008	9356560008			VARISTOR	0000361101	0000361101	
*455	CONTROL BOX METAL ASSY	9373904014	9373904014			VARISTOR	0000361224	0000361224	
455	SQUARE FLANGE ASSY	9356555004	9356555004			THERMO. SPRING-A	313728262708	313728262708	
468	NUT-A, M8	9356998009	9356998009			SPECIAL NUT-B(SMALL)	313005446759	313005446759	
574-1	EVA.FIXING PLATE-R	9356521009	9356521009			SPECIAL NUT-A(LARGE)	313005446653	313005446653	
574-2	EVA.FIXING PLATE-L	9356522006	9356522006			FUSE	0600365097	0600365097	
*735	DISTRIBUTOR ASSY	9368984038	9368984038			FUSE	0600222512	0600222512	
735-1	COUPLING PIPE ASSY	9373791010	9373791010			RELAY	9900007010	9900007010	
						WIRE(INDICATOR)	9702068042	9702068042	

Models : AS 7UFADR
AS 9UFADR
AS 12UFADR
AS 14UFADR

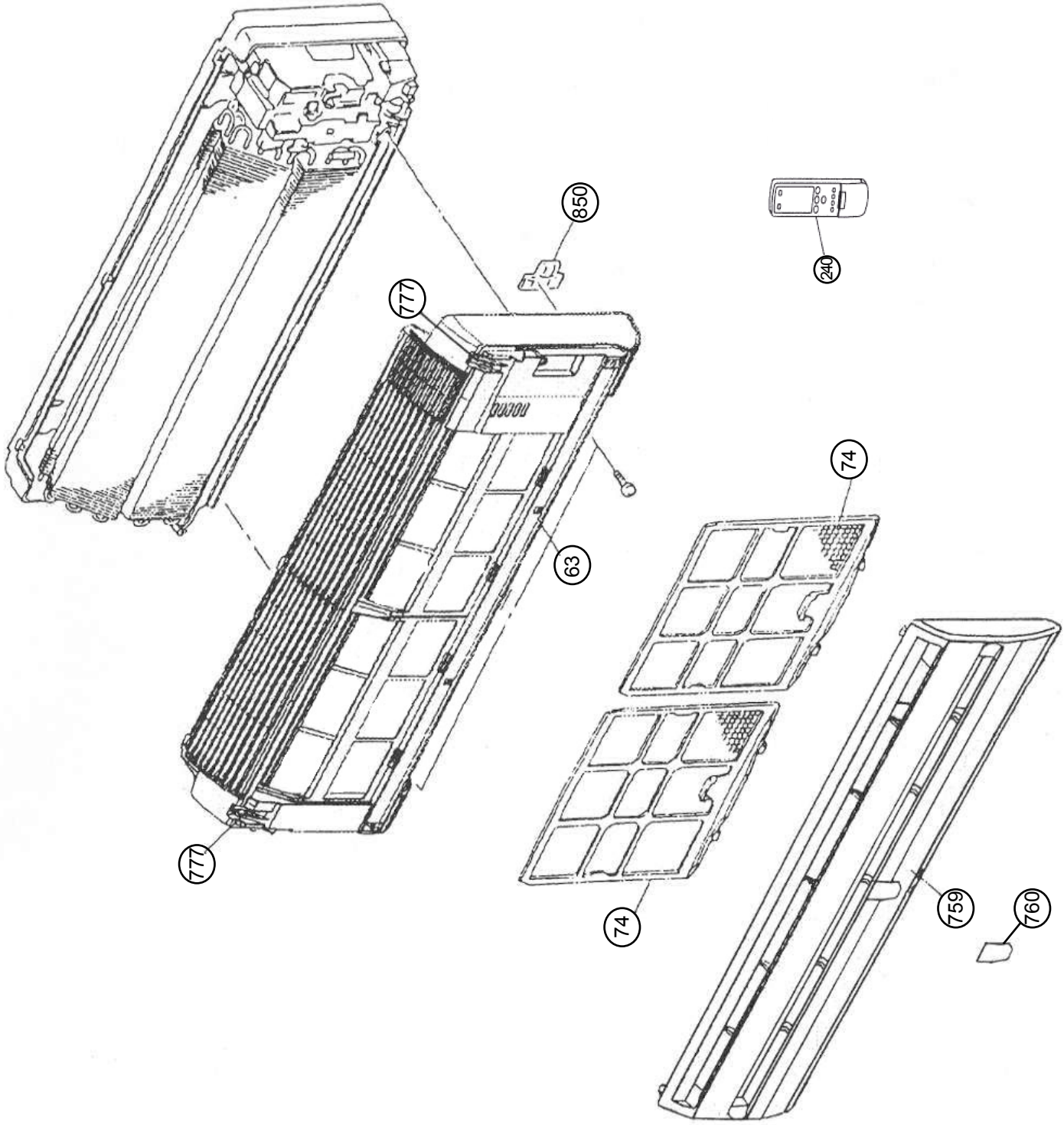

Models : AS 7UFADR
AS 9UFADR
AS 12UFADR
AS 14UFADR

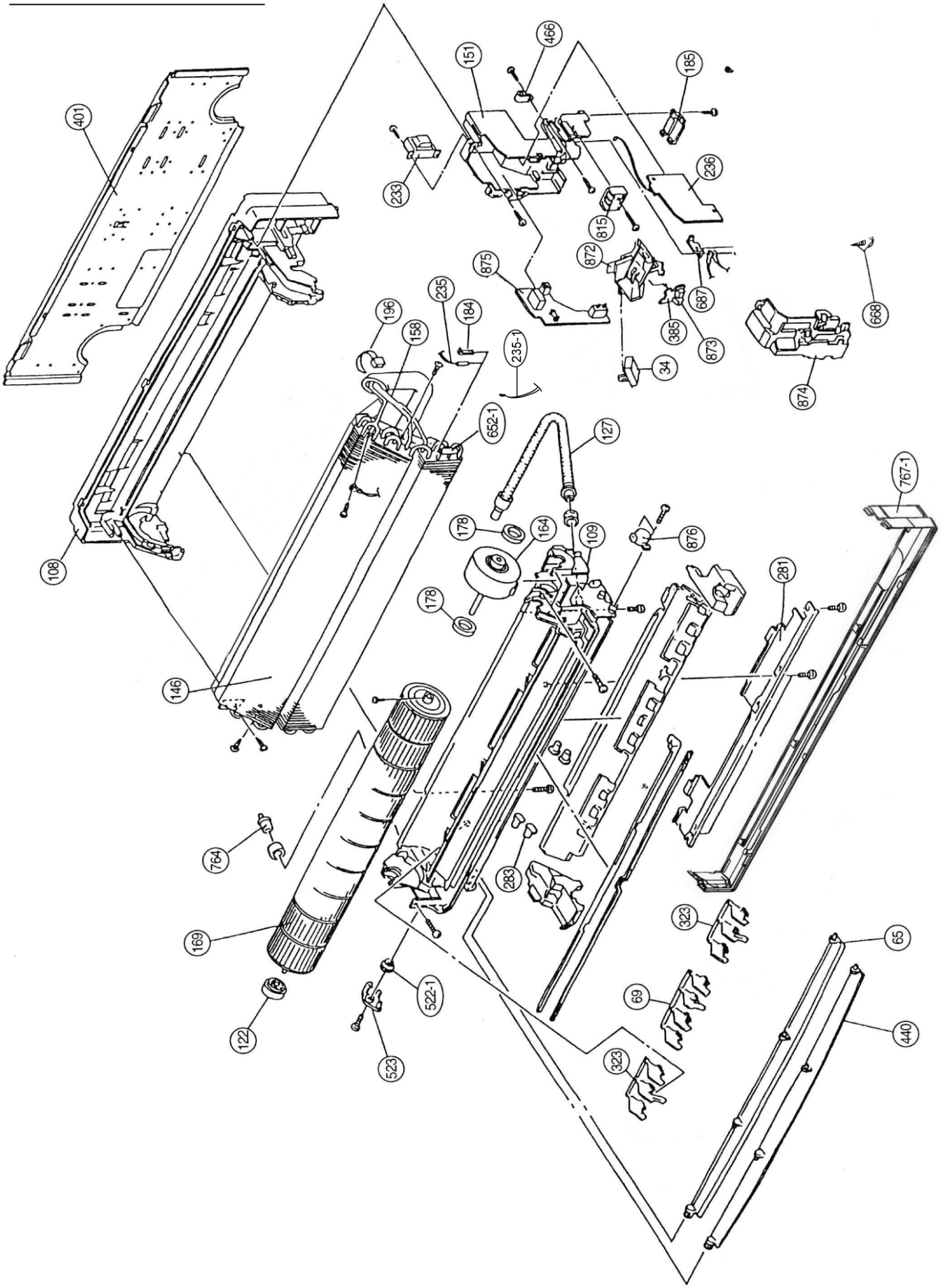

D I S A S S E M B L Y I L L U S T R A T I O N

Models : AS 18UFAJR
AS 24UFAJR

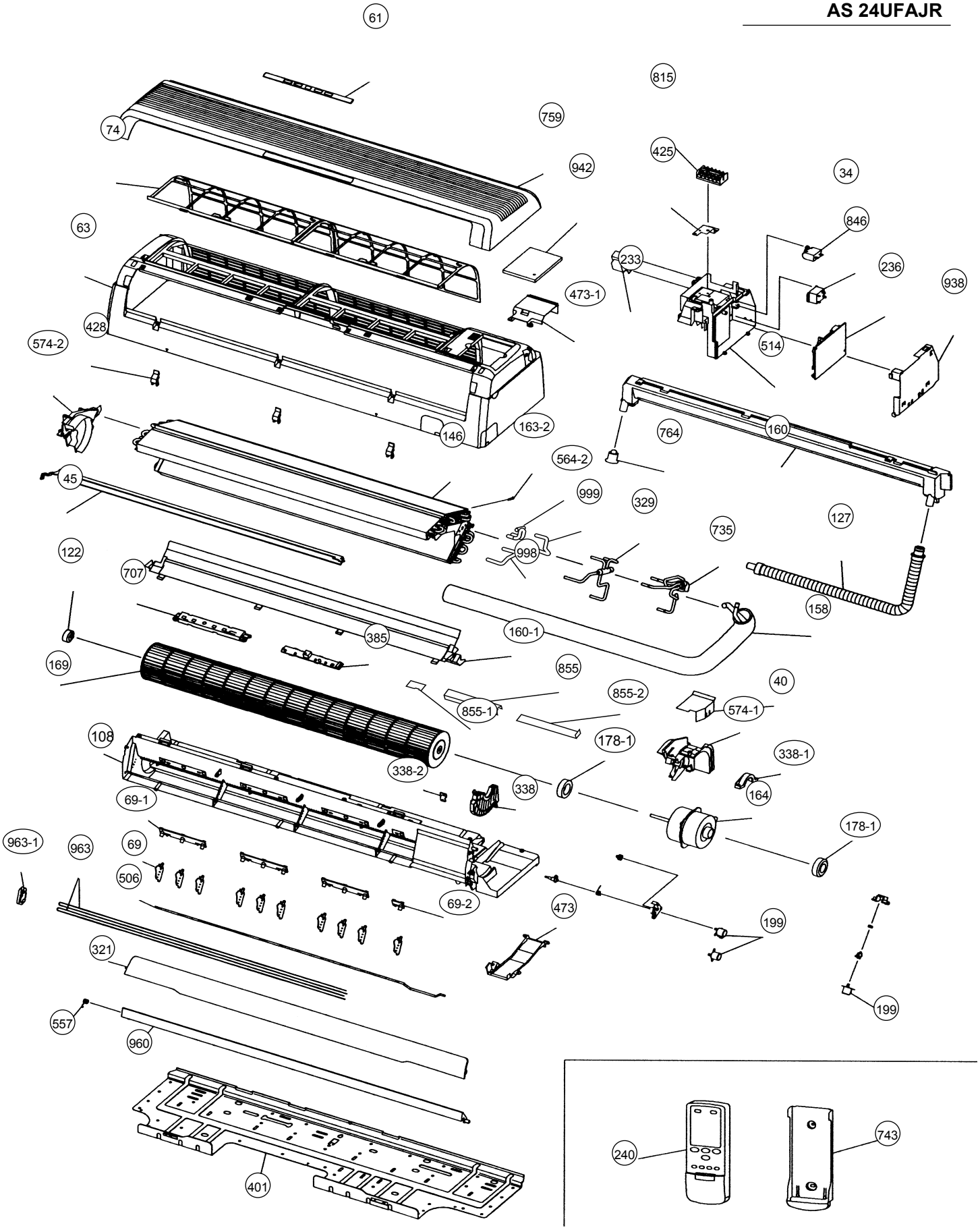

Models : AS 18UFAJR
AS 24UFAJR

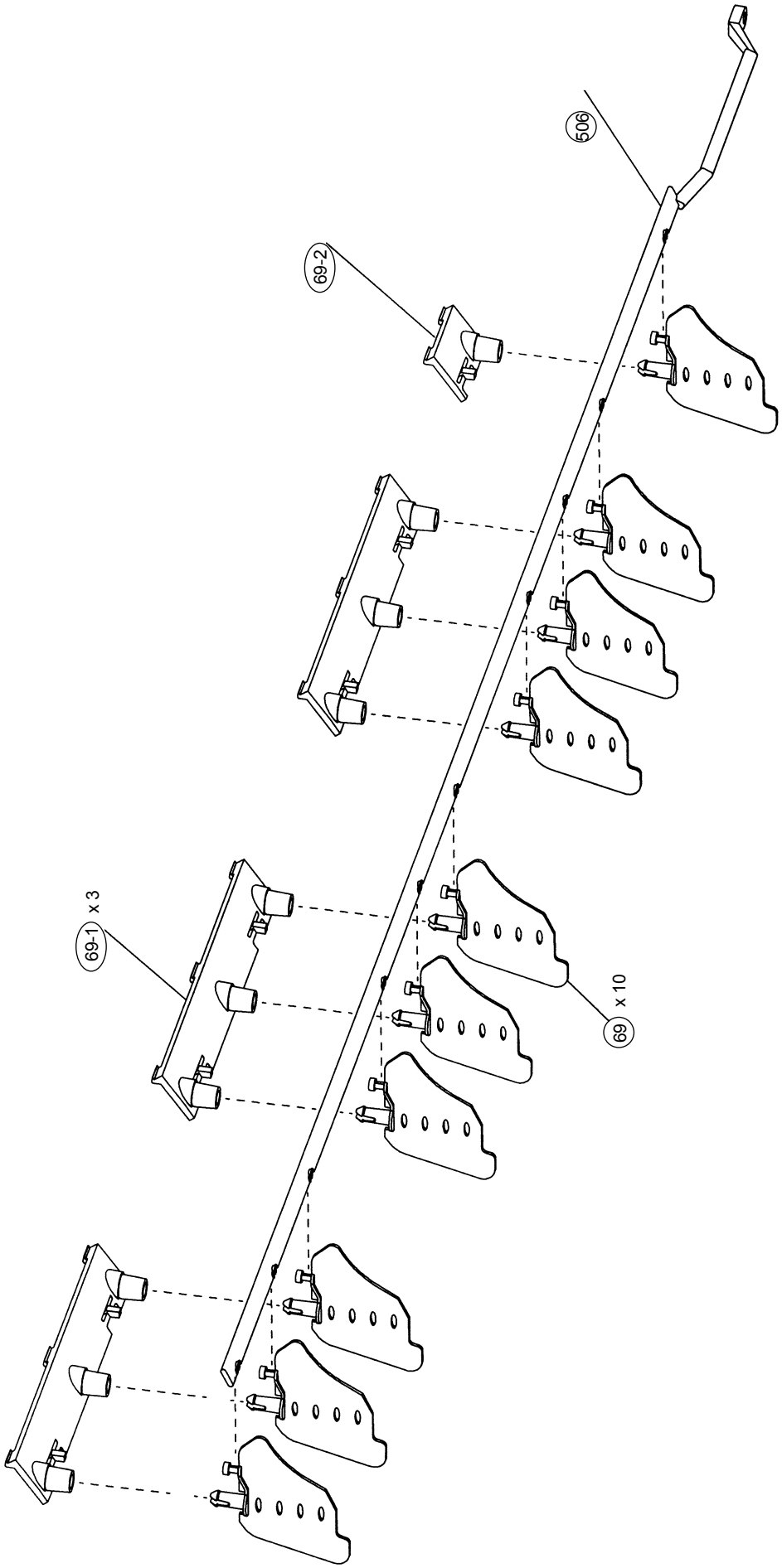

Models : AS 18UFAJR
AS 24UFAJR

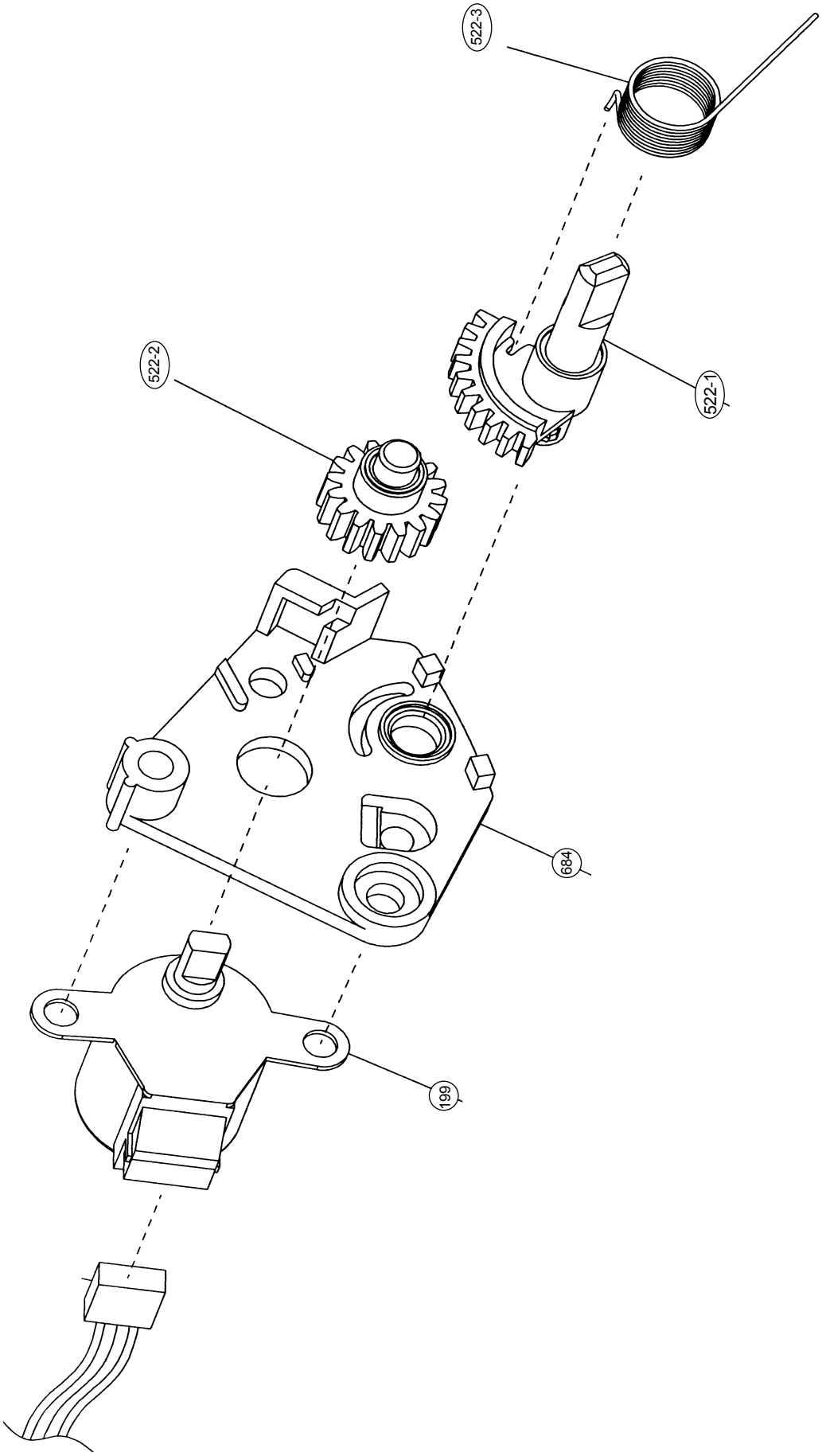

Models : AS 18UFAJR
AS 24UFAJR

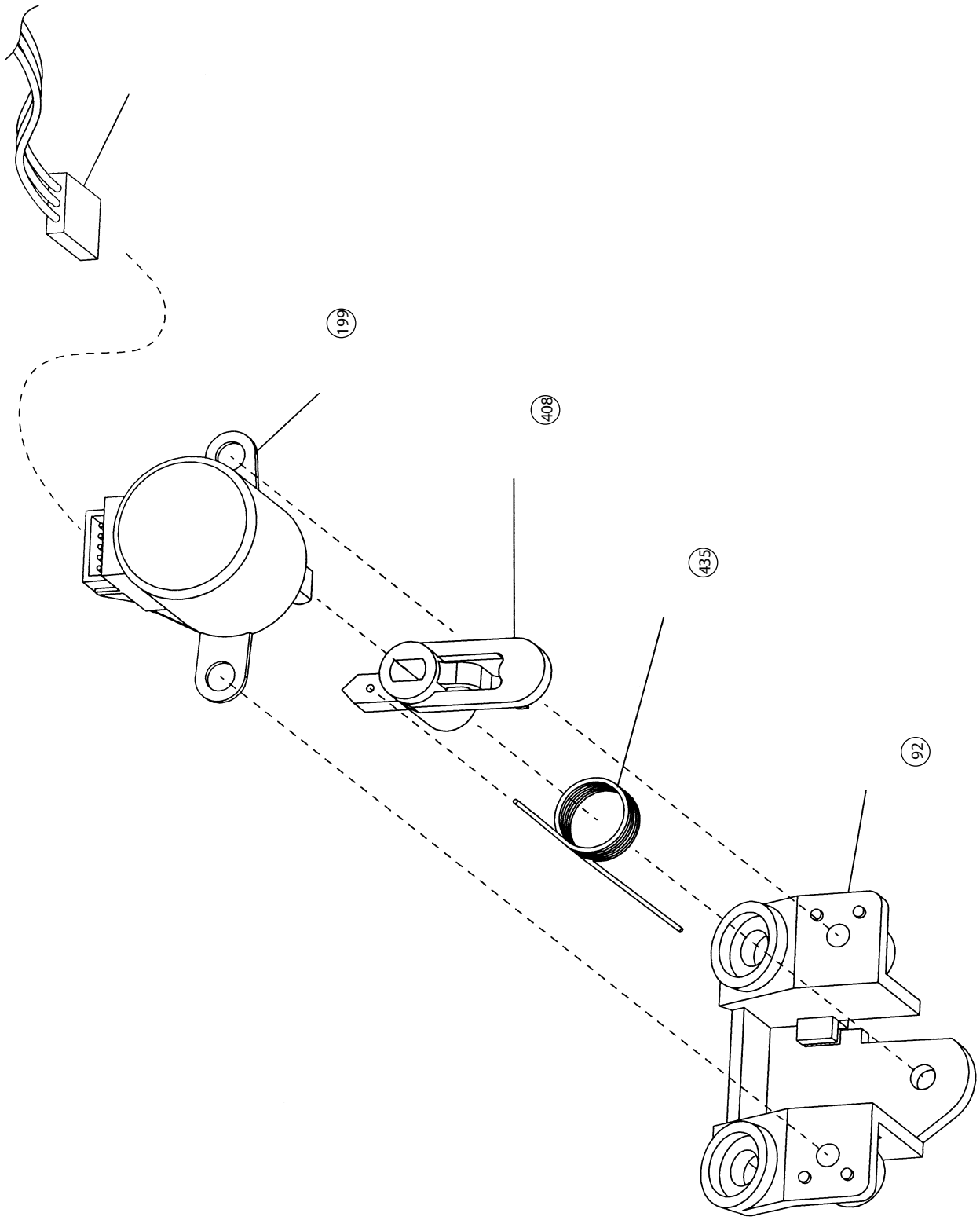

Models: AS 7UFADR
AS 9UFADR
AS 12UFADR
AS 14UFADR

P A R T S L I S T

When you order parts, please make a photocopy of this page and fill the number of the parts in the "Order" column.

INDOOR UNIT

Ref. No.	Description	Part No. AS 7UFADR AS 9UFADR	Part No. AS 12UFADR AS 14UFADR	Ord. Q`ty
34	Capacitor (Fan Motor)	9900089061	9900089061	
63	Front Panel	9330000049	9330000049	
65	Flow Control Panel-Z	9306058043	9306058043	
69	Louver-A	9306055028	9306055028	
74	Filter	9305444014	9305444014	
108	Base	9309755062	9309755062	
109	Casing	9306052027	9306052027	
122	Shaft Holder-B	9303066010	9303066010	
127	Drain Hose Assy	9305550029	9305550029	
146	EvaporatorAssy	9312170128	9312170135	
151	Control Box	9330007017	9330007017	
158	Connecting Pipe Assy	9306416027	9306416034	
164	Fan Motor Assy-IN	9601172017	9601172017	
169	Cross-Flow Fan Assy	9307836015	9307836015	
178	Motor Cushion-M	9601302018	9601302018	
184	Thermistor Spring	313728262708	313728262708	
185	Wire Clamp	9330015012	9330015012	
196	ClampSKB-150	313035356905	313035356905	
233	Power Transformer	9701803026	9701803026	
235	Thermistor Assy-Pipe	9702039059	9702039059	
235-1	Thermistor Assy-Room	9700801115	9700801115	
235-2	Thermistor Assy-Pipe	9702039066	9702039066	
236	Controller PCB Assy	9705199026	9705199026	
240	Remote Control Unit(JW-19)	9371190198	9371190198	
281	Clamp Metal (Pipe Braket)	9330011014	9330011014	
283	Bushing-A	9303529010	9303529010	
323	Louver-B	9306056025	9306056025	
385	PCB (Power and Indicator)	9705198029	9705198029	
401	Wall Hook Bracket	9309248014	9309248014	
440	Flow Control Panel-U	9306057046	9306057046	
522-1	Gear-A	9306062002	9306062002	

Ref. No.	Description	Part No. AS 7UFADR AS 9UFADR	Part No. AS 12UFADR AS 14UFADR	Ord. Q`ty
523	Gear Bracket	9306407001	9306407001	
668	Screw w/Washer	313681304205	313681304205	
687	Earth Terminal	9330012011	9330012011	
759	Intake	9330002043	9330002043	
760	Face panel(front)-B (emblem)	9330006034	9330006034	
764	Drain Cap Assy	9304150008	9304150008	
767-1	Bottom Cover-A	9330004016	9330004016	
777	Clamper(Grille)	9306755010	9306755010	
815	Terminal	9900040048	9900040048	
850	Window (Receiver)	9330003019	9330003019	
872	Indicator Case	9330009011	9330009011	
873	Lamp Cover	9330014015	9330014015	
874	Control Box Cover	9330008014	9330008014	
876	Step Motor	9900139018	9900139018	
	Signal PCB Assy	9705263017	9705263017	
	Varistor (RA-362M-V7-F)	0600280154	0600280154	
	Varistor (TNR10V820K)	0000361101	0000361101	
	Fuse (BET 3.15A-250V)	0600222512	0600222512	
	Fuse (0.315A-250V)	0600365097	0600365097	
	Flare Nut A (7,9=D9.52 /12,14=1/2)	9307767005	9310214015	
	Flare Nut B (D6.35)	9307768002	9307768002	
	Wire Assy (UL1430#22,2P)	9705463042	9705463042	
	Wire with Connector (L=110)	9701052035	9701052035	
	Wire with Connector (L=220)	9705022010	9705022010	

Models : ASY18UFAJR
ASY24UFAJR

P A R T S L I S T

INDOOR UNIT

When you order parts, please make a photocopy of this page and fill the number of the parts in the "Order" column.

Ref. No.	Description	Part No. ASY18UFAJR ASY24UFAJR	Part No.	Ref. No.	Description	Part No. ASY18UFAJR ASY24UFAJR	Part No.	Ord. Q'ty
34	Capacitor (Fan Motor)	9704305060		942	Control Box Cover	9368611002		
40	Water Seal Plate	9369684005		960	Diffuser	9369346019		
45	Bracket (Evaporator)	9369372001		963	Fan Guard	9368588007		
61	Decoration Plate-F	9368757014		963-1	Fan Guard Holder	9368554002		
63	Front Panel	9368540012		998	Bypass Pipe-A	9369238000		
69	Louver	9368560010		999	Bypass Pipe-B	9369239007		
69-1	Louver Base-A	9368558017						
69-2	Louver Base-B	9368559014			VARISTOR (TNR10V471K)	0000361224		
74	Air Filter	9368552008			VARISTOR (RA-362M-V7-F)	0600280154		
92	Link Holder	9368563004			VARISTOR (TNR10V820K)	0000361101		
					FUSE (0.315A- 217V)	0600365097		
108	Base	9369209017			FUSE (BET 3.15A-250V)	0600222512		
122	Bearing Assy	9368574000			THERMISTOR -ROOM (KTEC-41-FG2-17)	9703299179		
127	Drain Hose	9367695003			THERMISTOR -PIPE (KTM-45-FG1-10)	9703297076		
146	Evaporator Assy	9372102015			THERMISTOR -PIPE (KTM-45-FG9-1)	9900220013		
158	Joint Pipe Assy	9372590034			STEP MOTOR (MP24GA,DC 12V 0.1W)	9305780006		
160	Front Drain Pan	9368546007			SIGNAL PCB (EZ-003RHSE-C)	9705263017		
160-1	Rear Drain Pan	9368547004			FLARE NUT-A (5/8)	9373268017		
163-2	Thermistor Spring-A	313728262708			FLARE NUT-B (D6.35)	9351062019		
164	Fan Motor Assy-IN	9601388012						
169	Cross Flow Fan Assy	9368586003						
178-1	Rubber (Motor)	9368575007						
199	Step Motor	9900020019						
233	Transformer SW	9704658012						
236	Controller PCB Assy	9704815026						
240	Remote Control Unit(JW-19)	9371190198						
321	Flap	9371169019						
329	Coupling Pipe Assy	9372892015						
338	Motor Holder-A	9368550004						
338-1	Motor Holder-B	9368551001						
338-2	Motor Holder-C	9368769000						
385	Indicator PCB Assy	9702307011						
401	Wall Hook Bracket	9368579005						
408	Louver Link	9368562007						
425	Earth Plate	9368580001						
428	Screw Cover	9368576011						
435	Louver Spring	9368613006						
473	Pipe Holder	9368565008						
473-1	Cord Holder	9368566005						
506	Louver Rod	9368561017						
514	Control Box	9368543006						
522-1	Sector Gear	9368556006						
522-2	Pinion Gear	9368557003						
522-3	Flap Spring	9368612009						
557	Diffuser Spring	9368587000						
564	Bypass Pipe-A	9369238000						
564-2	Bypass Pipe-B	9369239007						
574-1	Evaporator Support-R	9371167015						
574-2	Evaporator Support-L	9371165011						
684	Motor Base	9368555009						
707	Display Cover	9368564001						
735	Distributor	9371178004						
743	Remote control Holder	9305642014						
759	Intake Grill-F	9368541019						
764	Drain Cap	9367677009						
815	Terminal	9704243010						
846	Relay G5NB-1A	9900007010						
855	Cover Display	9369264016						
855-1	Cover Display-B	9369594014						
855-2	Cover Display-C	9369683015						
938	Control Box Cover-R	9369631009						

Model : AS30UFAJR

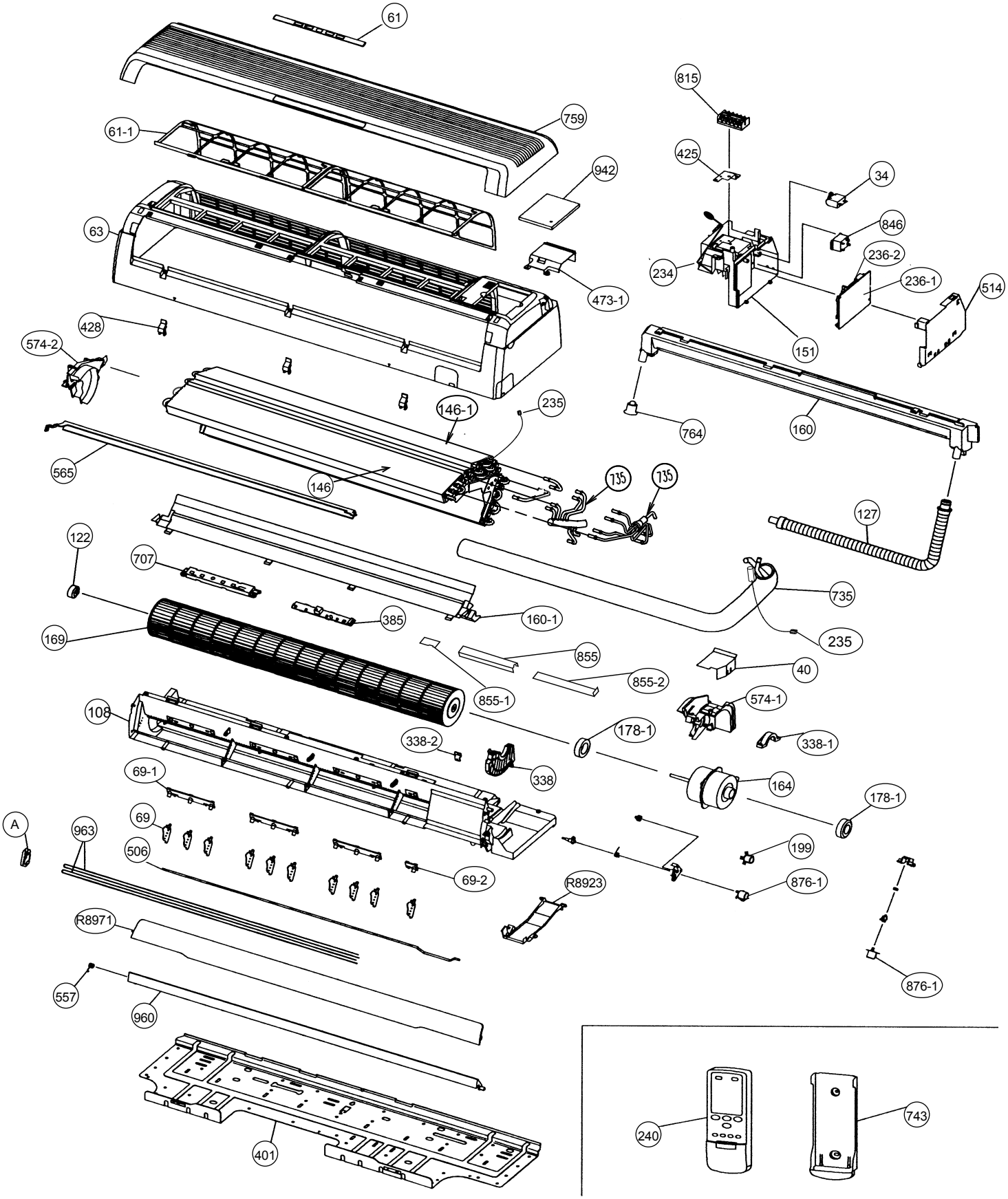

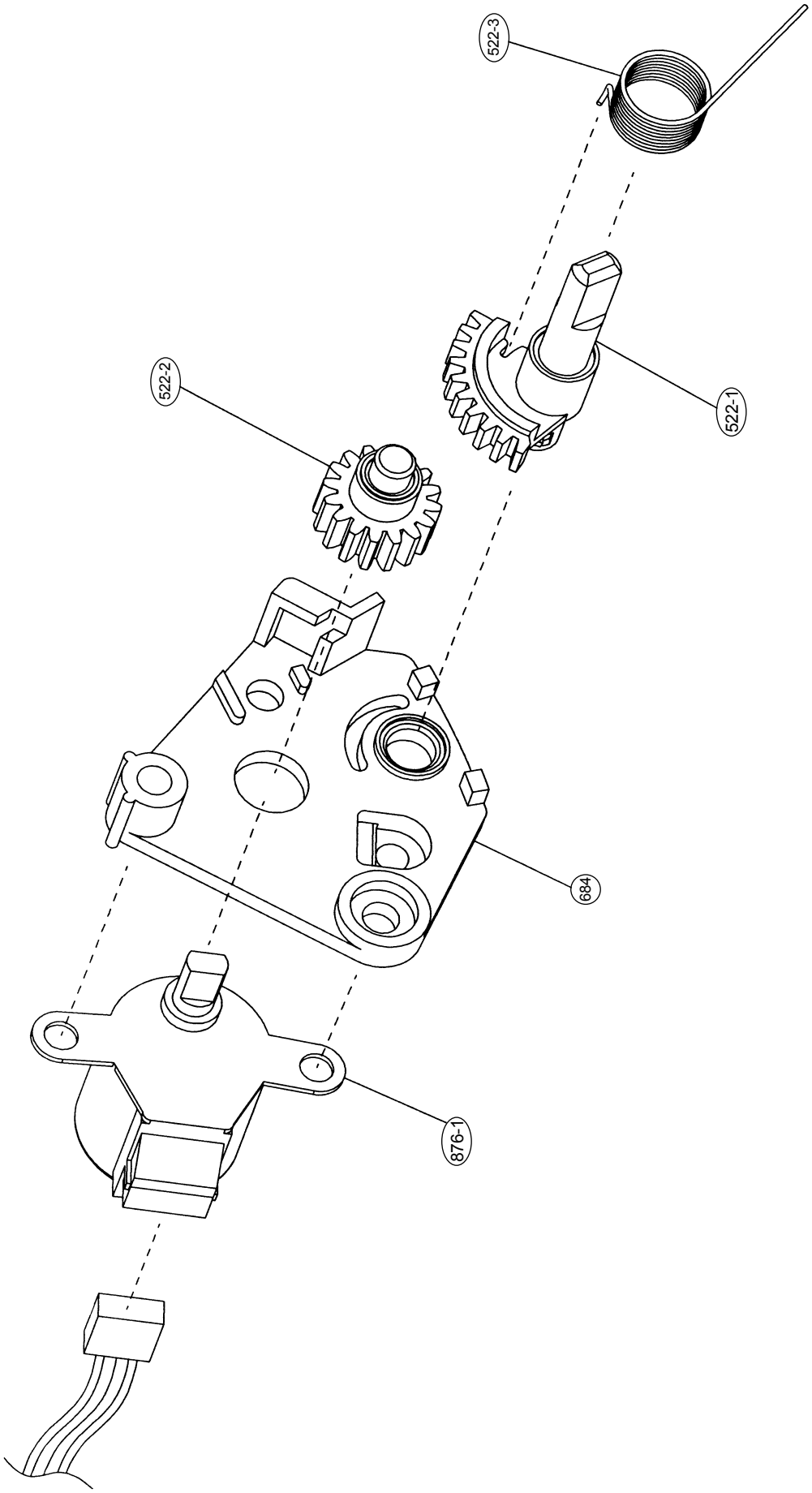
522-3
522-2
522-1
684
876-1

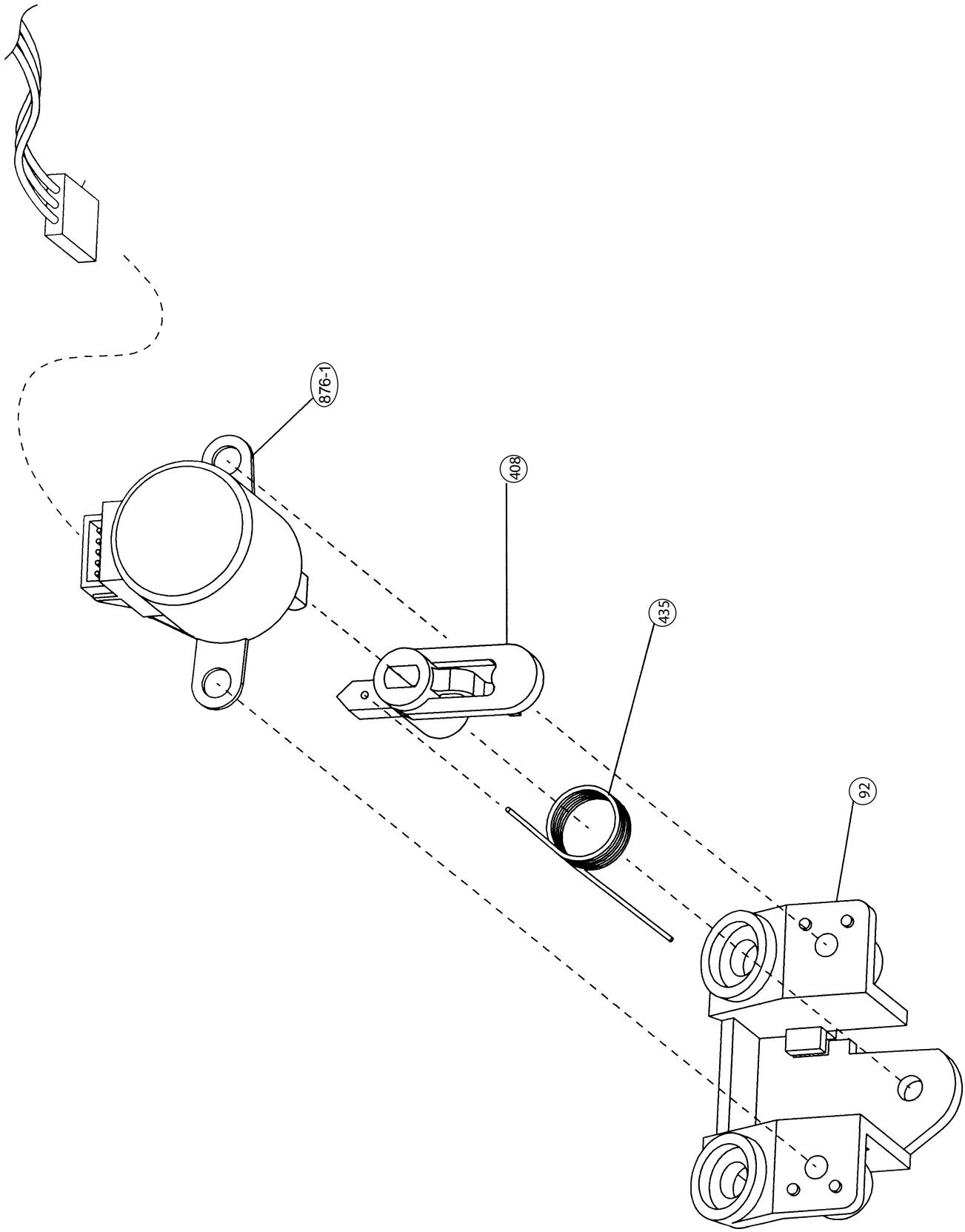
876-1
408
435
92

Models : AS30UFAJR

PARTS LIST

Ref No.	Discription	Parts No. AS 30UFAJR	ord Q'ty	Ref No.	Discription	Parts No. AS 30UFAJR	ord Q'ty
*34	FAN CAPACITOR	9704305060		684	MOTOR BASE	9368555009	
40	WATER SEAL PLATE	9369684005		707	DISPLAY COVER	9368564001	
61	DECORATION PLATE F.	9368757014		735	COUPLING PIPE AS	9371333014	
61-1	AIR FILTER	9373613015		735-1	DISTRIBUTOR ASSY	9371325019	
63	FRONT PANEL	9368540012		735-2	JOINT PIPE AS	9371341026	
69	LOUVER	9368560010		*743	REMOCON HOLDER CASE	9305642014	
69-1	LOUVER BASE A	9368558017		*815	TERMINAL,6P	9704243010	
69-2	LOUVER BASE B	9368559014		759	INTAKE GRILL F.	9368541019	
92	LINK HOLDER	9368563004		764	DRAIN CAP	9367677009	
108	BASE ASSY	9369209017		846	RELAY	9900007010	
*122	BEARING ASSY	9368574000		855	COVER(DISPLAY)	9369264016	
127	DRAIN HOSE	9367695003		855-1	COVER DISPLAY B	9369594014	
146	EVA A ASSY	9371347011		855-2	COVER DISPLAY C	9369683015	
146-1	EVA B ASSY	9371348018		876-1	STEP MOTOR	9305780006	
151	CONTROL BOX	9368543006		942	CONTROL BOX COVER	9368611002	
160	FRONT DRAIN PAN ASSY	9369200014		960	DIFFSER ASSY	9369346019	
160-1	REAR DRAIN PAN ASSY	9369201011		963	FAN GUARD	9368588007	
164	FAN MOTOR ASSY-IN	9601388012		R8923	KIT(PIPE HLD SA)	9371168012	
169	CROSS FLOW FAN ASSY	9368586003		R8971	KIT(FLAP SA)	9371169019	
178-1	RUBBER(MOTOR)	9368575007		A	KIT(FAN GRD HLD SA)	9371164014	
199	STEP MOTOR	9900020019			BRACKET(EVA)	9369372001	
234	THERMISTOR ASSY-ROOM	9703299179			PIPE THERMISTOR	9900220013	
235	THERMISTOR ASSY(PIPE	9703297076			FLAP	9368544010	
236-1	CONTROLLER PCB ASSY	9705491014			PIPE HOLDER	9368565008	
236-2	SIGNAL PCB ASSY	9705263017			U PIPE A AS	9303428016	
240	REMOCON ASSY AR-JW19	9371190198			U PIPE B AS	9303430019	
338	MOTOR HOLDER A	9368550004			HALF UNION-A	9304169017	
338-1	MOTOR HODER B	9368551001			FLARE NUT-A	9357352022	
338-2	MOTOR HODER C	9368769000			HALF UNION B	9301013009	
385	INDICATOR PCB ASSY	9702307011			FLARE NUT 5/8	9373268017	
401	WALL HOOK BRACKET	9368579005			RELAY SOLID	9704297037	
408	LOUVER LINK	9368562007			WATER PLATE	9368569006	
425	EARTH PLATE	9368580001			VARISTOR (ARRESTER)	0600280154	
428	SCREW COVER	9368576011			VARISTOR	0000361101	
435	LOUVER SPRING	9368613006			VARISTOR	0000361224	
473-1	CORD HOLDER	9368566005			THERMISTOR SPRING A	313728262708	
506	LOUVER ROD	9368561017			RELAY	9701316014	
514	CONTROL BOX COVER R	9369631009			TRANS,SW	9704658012	
522-1	SECTOR GEAR	9368556006			COVER(BASE)R	9368581008	
522-2	PINION GEAR	9368557003			COVER(BASE)L	9368582005	
522-3	FLAP SPRING	9368612009			COVER(BASE)RF	9368782009	
557	DIFFUSER SPRING	9368587000			COVER(BASE)A.	9368781002	
565	KIT(EVA BRKT SA)	9371166018			FUSE	0600365097	
574-1	KIT(EVA SUP R SA)	9371167015			FUSE	0600222512	
574-2	KIT(EVA SUP L SA)	9371165011					

AIRSTAGE™

J SERIES

FUJITSU GENERAL LIMITED

1116, Suenaga, Takatsu-ku, Kawasaki 213-8502, Japan

Product specifications are subject to change without notice.

"AIRSTAGE™" is a worldwide trademark of FUJITSU GENERAL LIMITED.

Copyright© 2002 Fujitsu General Limited. All rights reserved.

Printed in Japan 2006.04.27